panel cut out

(1:1)

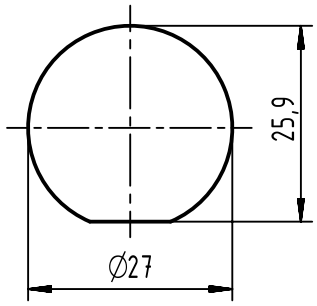

max. wall thickness 2.3mm

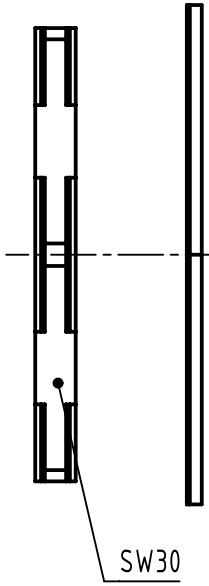

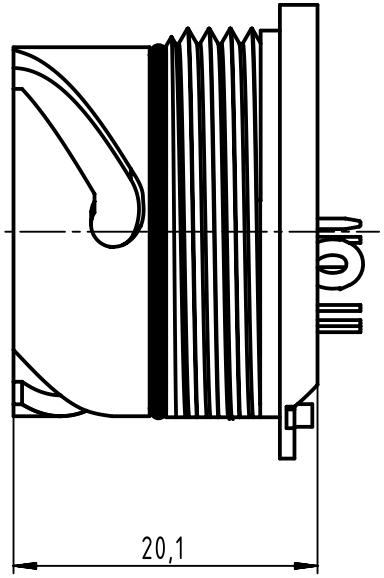

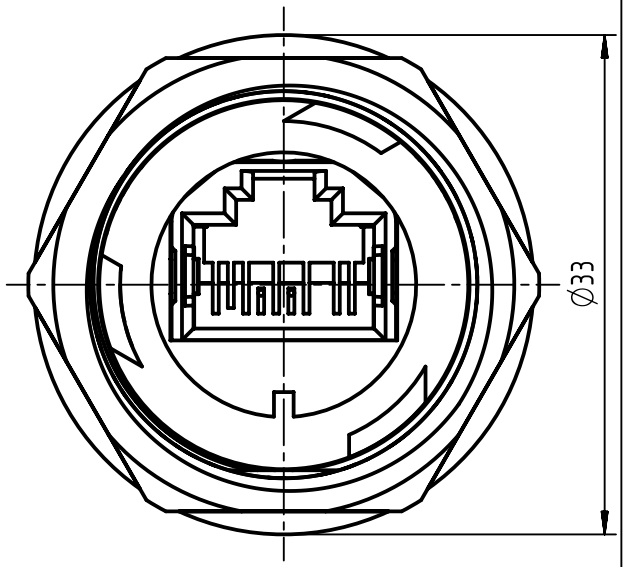

PCB layout

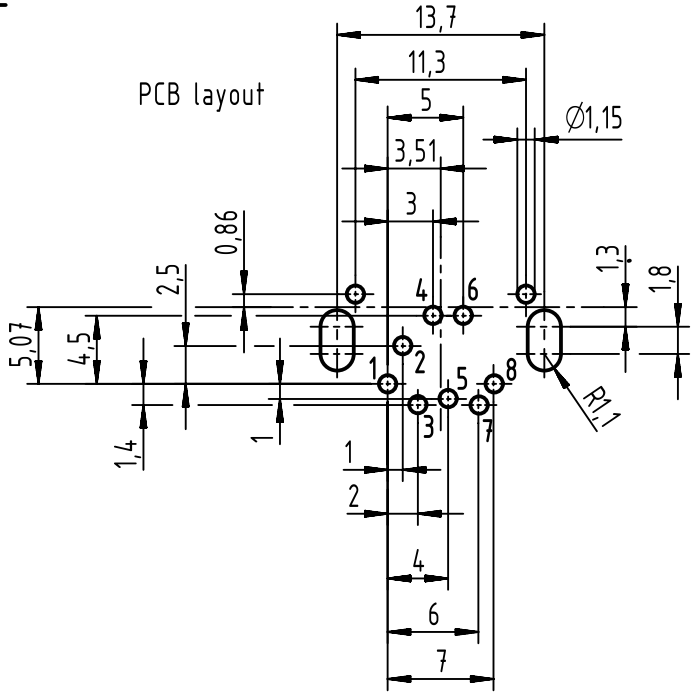

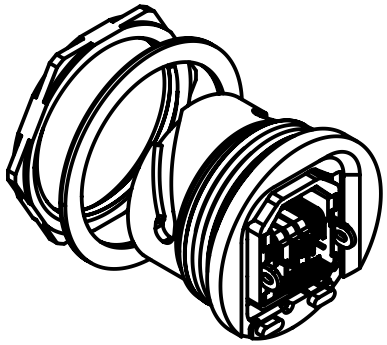

All Dimensions in mm Original Size DIN A4	Scale 2:1	Free size tol.		Ref. Sub. TB 09 15 300 0305 / 36035 / 28.04.2010	
All rights reserved Department EC PD - DE	Created by HAGEMEYERE	Inspected by ELLERMANN	Standardisation HOFFMANN	Date 2014-09-01	State Final Release
HARTING Electronics GmbH D-32339 Espelkamp	Title Han Max-F panel feed through shielded				Doc-Key / ECM-Nr. 100185496/UGD/003/B 500000079342
	Type TB	Number 09153000305		Rev. B	Page 1/1

Downloaded from Arrow.com.

A4