A
board drillings

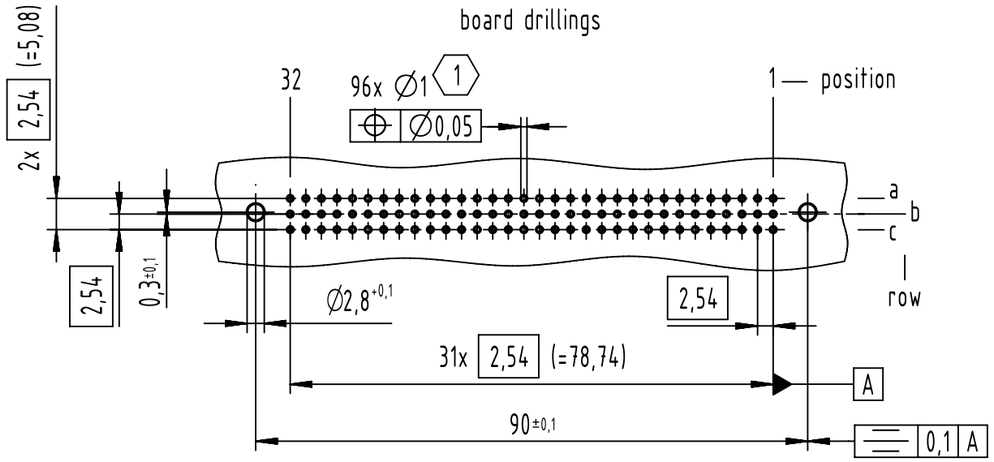

A
contact arrangement

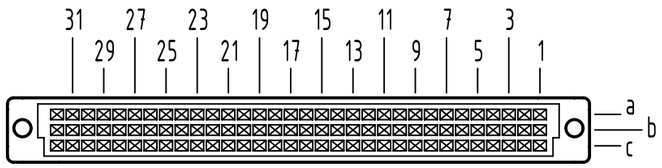

96 press-in contacts

⊠ = position with contact

□ = position without contact

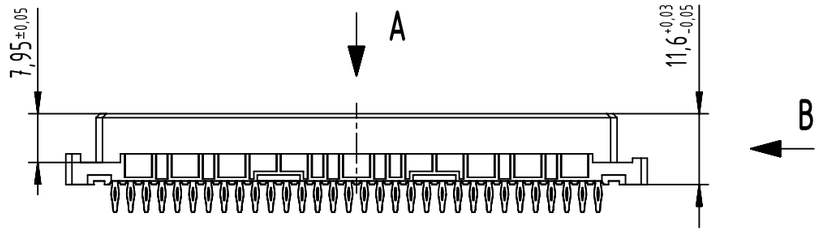

B (2:1)

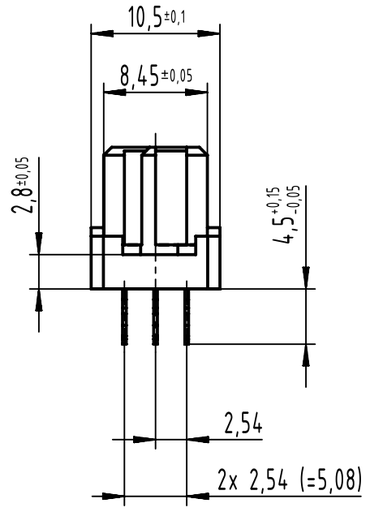

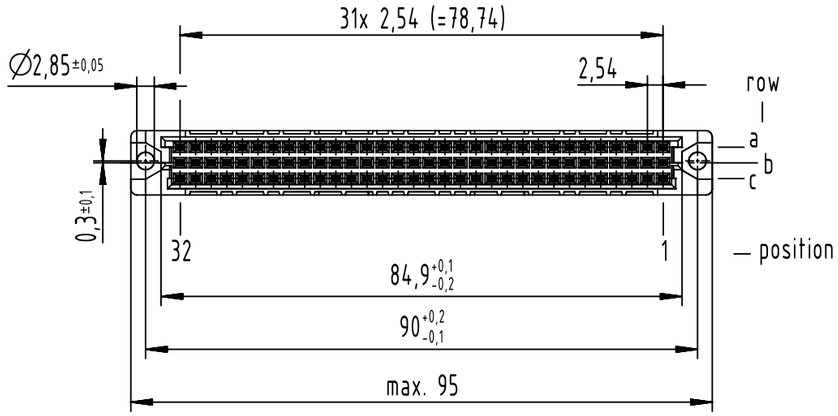

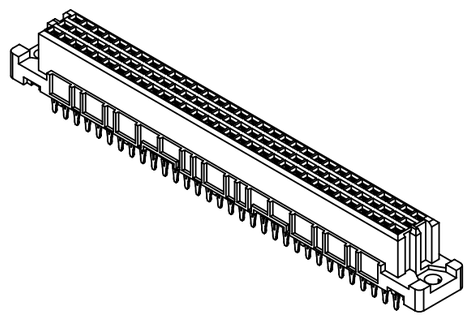

only mateable with HARTING DIN NFF connector

(1) recommended configuration of plated through holes and further information see product data sheet

part no.	performance level
09 03 296 6850 222	2
09 03 296 2850 222	1

All Dimensions in mm Original Size DIN A3	Scale 1:1	Free size tol. complementary IEC 60603-2		Ref. Sub.
All rights reserved Department EL PD	Created by STORCK	Inspected by LEHNERT	Standardisation 302077	Date 2021-02-11	State Final Release
HARTING D-32339 Espelkamp	Title DIN Signal type C female press-in NFF 4.5 96-pole			Doc-Key / ECM-Nr. 100173852/UGD/169/G 500000188551
	Type TB	Number 0903296X850222	Rev. G	Page 1/1

A3

Downloaded from Arrow.com.