SYMBOL DEFINITION		
A DIMENSION WITHOUT AN INSPECTION REPORT SYMBOL DOES NOT REQUIRE INSPECTION. IT MAY BE CONTROLLED ON THE INDIVIDUAL COMPONENT DRAWING.	TOTAL NO OF INSPECTIONS REQUIRED	9
	LAST NO. USED	10

MISSING SYMBOLS
2-3 5

DWG STATUS					ZONE	REVISION HISTORY	AUTH	DR	APVD 1	APVD 2
DATE	STG	REV	N/P	CHG						
21JN18	R	01	-	-		35191210 WAS PE377692 AND RELEASED PART DRAWING; 35191211 WAS PE377693 AND RELEASED PART DRAWING; 35191212 WAS PE377694 AND RELEASED PART DRAWING	440173	SNS	SNS	DAB
08AU18	R	02	-	-		DIM #4 WAS 10±0.1; ADDED DATUMS AND PROFILE TOLERANCE; ADDED DIM #5-8; ADDED NOTE 8 AND 9; REMOVED DIM #2-3; REMOVED NOTE 6	440587	AN	SNS	DAB
08DE18	R	03	-	-		ALL PARTS - REVISED MATERIAL COLOR	441241	AN	SNS	ERM
22MY20	R	03	AA	-		REMOVED NO PART AVAILABLE LINE ADDED TOLERANCE ACCEPTED TABLE	445398	YS	YS	MA
28MY20	R	03	AB	-		DELETED DIM#5 AND ADDED DIM#9 #10	445398	YS	MA	YS

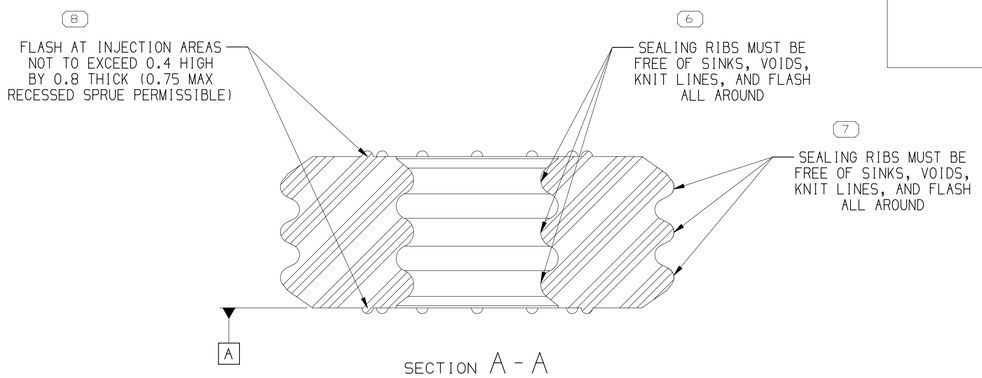

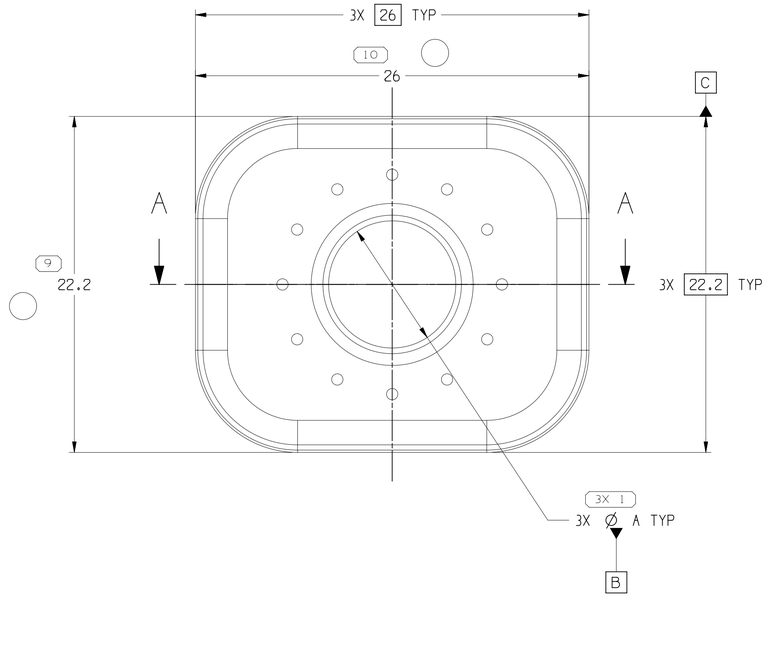

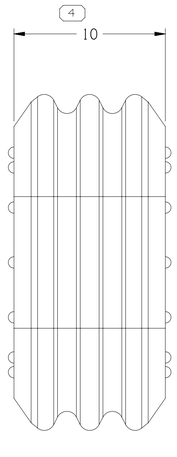

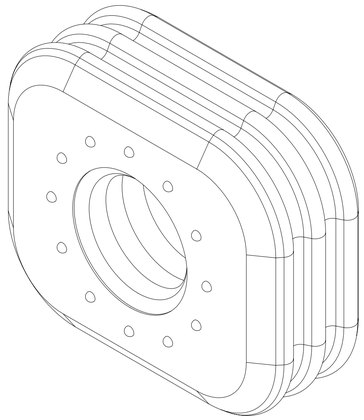

NOTES

1. UNLESS OTHERWISE SPECIFIED AND/OR INDICATED:

   DIMENSIONS ARE TO FACE OF VIEW SHOWN AND AUTOMATICALLY ROUNDED BY COMPUTER FOR INSPECTION (SEE MATH MODEL FOR PRECISE DIMENSIONS). FOR ALL OTHER DIMENSIONS NOT SHOWN BUT REQUIRED FOR TOOL BUILD, SEE MATH MODEL FOR PRECISE TOOL PATH DATA.

2. PARTS MUST BE FREE OF DUST, DIRT, CARDBOARD FIBERS, OR ANY PARTICULATE THAT MAY CAUSE FIT OR FUNCTION CONCERN. PARTS MUST BE PACKED IN SEALED PLASTIC BAGS.

3. PARTS MUST BE MADE FROM VIRGIN MATERIAL ONLY.

4. REFERENCE MATING COMPONENTS OR EQUIVALENT: SHOWN ON TAXI 35228534 AND 35228536

5. PARTS SHOWN ON THIS DRAWING ARE USED IN ASSEMBLIES SHOWN ON TAXI 35228533 AND 35228535.

7. PARTS ARE TO BE PACKAGED IN SEALED PLASTIC BAGS. GROSS WEIGHT INCLUDING CARTON IS NOT TO EXCEED 30 POUNDS.

8. FOR TOOL FIXERS, TOOL MOVEMENTS AND RE-PPAP REVIEW TQD DRAWINGS FOR CRITICAL DIMENSION. DIM #5 & 228 MUST COMPLY.

9. FOR PROFILE INSPECTION DETAILS SEE TQD.

10		26.37
9		22.52
4		10.145
DIMENSION NUMBER	MINIMAL VALUE	MAXIMAL VALUE
DIMENSIONS OUT OF TOLERANCE RANGE BUT ACCEPTED FOR CHN TOOL 35191210-RL-B-C002		

35191210	02	-	SILICONE COMPOUND - BLU	4.486	6.4-7.2	5.3
35191211	02	-	SILICONE COMPOUND - GRA	4.318	7.9-8.7	6.8
35191212	02	-	SILICONE COMPOUND - RED	4.101	9.4-10.4	8.4
PART NO	REV	N/P	MATERIAL SPECIFICATION AND COLOR	VOLUME(CM³)	CABLE O.D(MM)	A± 0.1

4 PROCESS SENSITIVE DIMENSION

DIMENSIONS ENCLOSED IN ( ) INDICATE REFERENCE DIMENSIONS AND NO TOLERANCE LIMITS ARE ESTABLISHED

DIMENSIONAL RANGE (MM)									CHART E1
FROM	> 0	> 20	> 30	> 70	>100	>150	>200	>250	>300
TO	20	30	70	100	150	200	250	300	400
TOLERANCE UNLESS OTHERWISE SPECIFIED									
	±0.15	±0.2	±0.3	±0.4	±0.5	±0.6	±0.8	±1	±1.2
ANGULAR TOLERANCE ±2°									

A LINE DRAWN THROUGH A PART NUMBER INDICATES THAT PHYSICAL PARTS ARE NOT AVAILABLE FOR ORDERING.

PART NUMBERS THAT DO NOT HAVE A LINE PRESENT INDICATE THAT PHYSICAL PARTS ARE AVAILABLE FOR ORDERING.

CONTACT APTIV SALES TO ASSURE AVAILABILITY OF PARTS.

DWG TYPE: PART DRAWING

STYLE

VOLUME (CM³): SEE CHART

DISTR CODE: D

UNLESS OTHERWISE SPECIFIED

THIS DOCUMENT IS IN ACCORDANCE WITH ASME Y14.5M-1994 AS AMENDED BY THE GM GLOBAL DIMENSIONING AND TOLERANCING ADDENDUM-2001. SEPARATE PATTERNS OF FEATURES MAY BE GAGED SEPARATELY REGARDLESS OF DATUM REFERENCES.

ALL DIMENSIONS ARE IN MILLIMETERS

REFERENCE

THIRD ANGLE PROJECTION

DO NOT SCALE

USE MATH DATA

CAD NX

•APTIV•

CONNECTION SYSTEMS

Anting, China

COPYRIGHT 2018 APTIV. ALL RIGHTS RESERVED.

THIS DRAWING IS THE PROPERTY OF APTIV AND CONTAINS APTIV CONFIDENTIAL INFORMATION. THE REPRODUCTION, DISTRIBUTION AND UTILIZATION OF THIS DOCUMENT OR ITS RELATED CAD MATH DATA, AS WELL AS COMMUNICATION OF ANY CONTENT TO OTHERS, WITHOUT EXPRESS AUTHORIZATION, IS PROHIBITED.

		DATE
DR		
APVD1	S. SUBRAMANIAN	21JN18
APVD2	S. SUBRAMANIAN	21JN18
APVD3	DARIEN AGUILAR	21JN18
APVD4		
APVD5		

SUBSTANCES OF CONCERN AND RECYCLED CONTENT PER APTIV 10949001

MATERIAL: SEE CHART

DRAWING NAME: TAXI SEAL CBL 1W PWR PACK

DRAWING NUMBER: 35228537

SIZE	SCALE	FRAME NO	SHEET NO	STG	REV	N/P
A1	5:1	1 OF 1	1 OF 1	R	03	AB

User: z4072 Date: 04-Aug-20 Time: 16:26:20
Dwg: 35228537-CUS01-S01/03AB
Jobz: z4072_08042020_16:25_12cpass.nc

Downloaded from Arrow.com.