Features

- 24-bit isolated shunt current sensor with RS485/MODBUS interface
- 1500 VDC reinforced galvanic isolation
- 16-bit microcontroller (rated to +150 °C)
- 24-bit ADC with buffered analog inputs
- ECC flash memory with autocorrect single bit errors
- Internal and external CRC data error detection
- Non-linear temperature compensation
- AEC-Q–compliant component assembly option
- RoHS compliant*

SSD-RS485 Series – Digital Current Sensor with RS485/MODBUS Interface

Specifications

Characteristic	SSD-100A	SSD-250A	SSD-500A	SSD-1000A
Nominal Current (A)	±100	±250	±500	±1000
Peak Current (No Clipping)	+2 kA / -1 kA	+5 kA / -2.5 kA	+10 kA / -5 kA	+20 kA / -10 kA
Shunt Resistance ($\mu\Omega$) Excluding primary termination resistance	300	120	60	30
Initial Accuracy	< ±0.1 %			
Linearity Over Current Range	< ±0.1 % + 5 mA	< ±0.1 % + 13 mA	< ±0.1 % + 25 mA	< ±0.1 % + 50 mA
Bandwidth	5 kHz			
ADC Resolution	24 bits			
Speed (readings per second)	up to 1100 rps (0.9 - 3300 ms per reading)			
Supply Voltage	5 - 60 VDC			
Typical Supply Voltage (See Shunt Supply Voltage Requirements on Page 2)	*@ 5.0 V, 55 mA typical		**@ 24 V, 15 mA typical	
DC Bus Voltage Measurement	±1200 VDC max. (10 M input impedance)			
Linearity Over Voltage Range	< ±0.1 % + 25 mV			
RS-485 Interface (default)	Speeds: 4800, 9600, 14400, 19200 (default), 28800, 38400, 57600, 115200, 230400, 460800, 921600 8 bits, no parity, 1 stop			
Long Term Stability	< ±0.3 % 1000 hours 115 °C terminal temperature			
Galvanic Isolation	1500 VDC 1000 VAC RMS (maximum continuous working voltage)			
Dielectric Strength	3500 VAC RMS 1 minute			
Operating Temperature	-40 °C to +115 °C ambient -40 °C to +125 °C primary conductor (see derating curve on page 2)			
Storage Temperature	-55 °C to +125 °C			
Assembled using AEC-Q Compliant Components	–	–	–	✔

Materials (RoHS Compliant)

Resistance Element.....CuMnNi
Current Terminal[1]....Nickel-plated copper
Electronics Housing.....94-V0 rated

Note:
1 Suitable for copper, copper-clad aluminum or aluminum conductors

Product Safety Notice

The SSD Series Digital Current Sensor must be used in a manner specified by this data sheet, otherwise the protection provided by the equipment may be impaired. The SSD Series should not be treated as a structural part of the installation and must be properly supported on both ends.

Additional Information

Click these links for more information:

PRODUCT | TECHNICAL LIBRARY | INVENTORY | SAMPLES | CONTACT

CALIFORNIA WARNING: Can expose you to lead, a carcinogen and reproductive toxicant.
See www.P65Warnings.ca.gov

*RoHS Directive 2015/863, Mar 31, 2015 and Annex.
Specifications are subject to change without notice.
Users should verify actual device performance in their specific applications.
The products described herein and this document are subject to specific legal disclaimers as set forth on the last page of this document, and at www.bourns.com/docs/legal/disclaimer.pdf.

Downloaded from Arrow.com.

Applications

- EV charging stations
- Battery systems
- Renewable energy systems

Motor drives

Specifications (continued)

Model	Typical Noise (mA RMS) per ADC Reading Interval (ms), 1.25X Range, Zero Current															
	0.9	1.6	3.2	4.8	6.4	7.2	9	13	26	51	102	205	410	820	1640	3280
SSD-100A	3	3	2	2	2	2	1	1	1	1	1	<1	<1	<1	<1	<1
SSD-250A	8	7	6	5	5	4	4	3	3	2	2	1	1	1	1	<1
SSD-500A	15	13	12	11	10	9	7	7	5	4	3	2	2	1	1	1
SSD-1000A	31	27	24	21	19	17	15	13	11	9	6	4	3	2	2	1

Shunt Supply Voltage Requirements

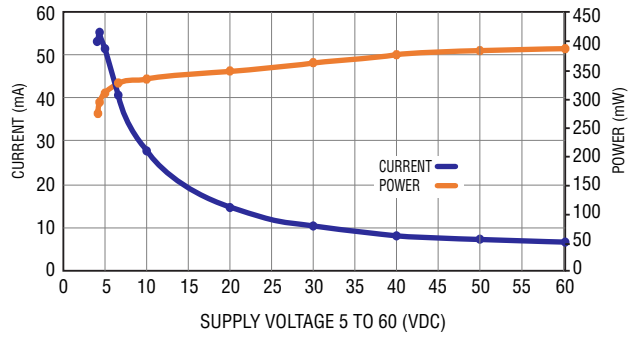

* @5.0 V, 55 mA (SSD-100A and SSD-250A only)

** @24 V, 15 mA (SSD-500A and SSD-1000A only)

Derating Curve

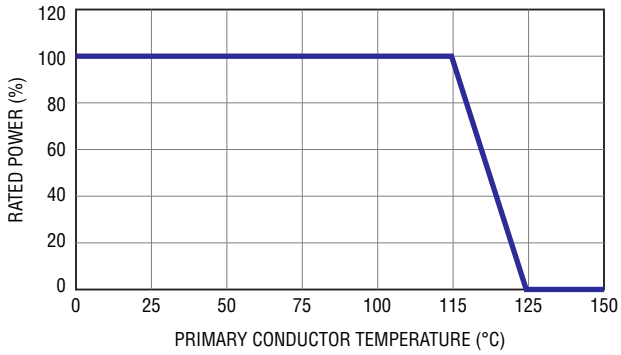

Overcurrent vs. Time

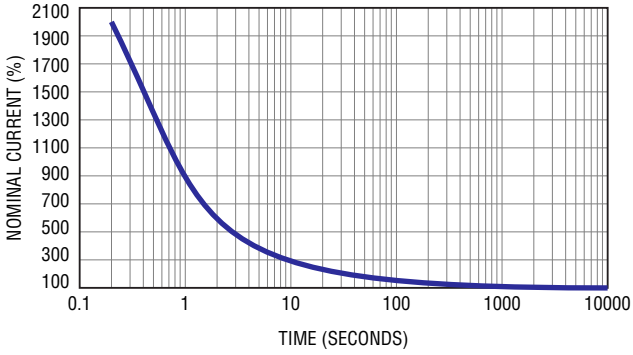

Connectors

SSD Connector	Mating Connector	Molex Nano-Fit Part Number
4-Pin Male	4-Pin Female	1053071204
	0-22 AWG Female Contacts*	1053002200
	4-Pin TPA Strain Relief	1053251004
2-Pin Male Vbus	2-Pin Female	1053071202
	20-22 AWG Female Contacts*	1053002200
	2-Pin TPA Strain Relief	1053251002

* Use Gold (Au) plated contacts for 115 °C temperature rating.

How to Order

SSD - 100A - R - T

Model

Amps

100A = 100 A 250A = 250 A 500A = 500 A 1000A = 1000 A

Interface

R = RS-485, MODBUS (Industrial Version)

RA = RS-485, MODBUS (Assembled using AEC-Q Compliant Components - Model SSD-1000A Only)

Option

Blank = Standard

-T = Internal 120 Ω Termination Resistor (Industrial Version Only)

Specifications are subject to change without notice.
Users should verify actual device performance in their specific applications.
The products described herein and this document are subject to specific legal disclaimers as set forth on the last page of this document, and at www.bourns.com/docs/legal/disclaimer.pdf.

Downloaded from Arrow.com.

Product Dimensions

SSD-100A to SSD-500A

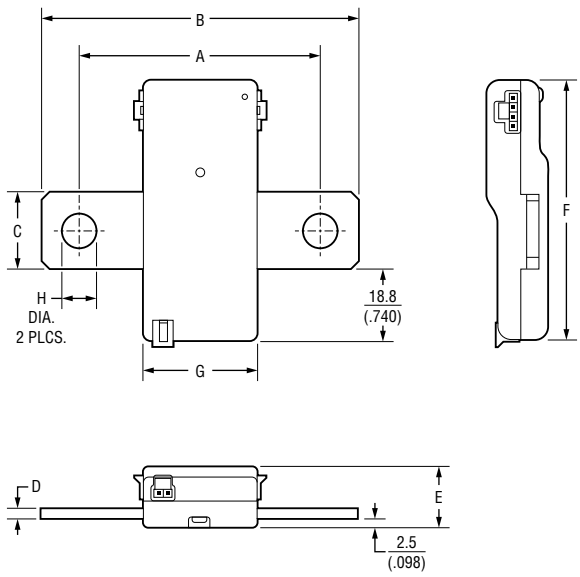

SSD-1000A

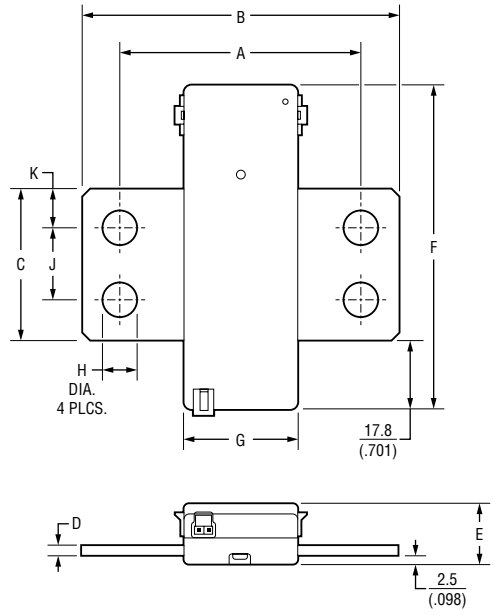

Model	SSD-100A	SSD-250A	SSD-500A	SSD-1000A
A	63.5 ± 0.5 (2.50 ± .020)			
B	84 ± 0.5 (3.307 ± .020)			
C	20 ± 0.5 (.787 ± .020)			40 ± 0.5 (1.575 ± .020)
D	3 ± 0.5 (.118 ± .020)		4 ± 0.5 (.157 ± .020)	
E	16.4 ± 0.5 (.646 ± .020)		17.4 ± 0.5 (.685 ± .020)	
F	68.8 ± 0.5 (2.709 ± .020)			85.8 ± 0.5 (3.378 ± .020)

Model	SSD-100A	SSD-250A	SSD-500A	SSD-1000A
G	30.8 ± 0.5 (1.213 ± .020)			
H	8.7 ± 0.5 (.343 ± .020)			
J	-	-	-	19 ± 0.3 (.748 ± .012)
K	-	-	-	10.5 ± 0.3 (.413 ± .012)

DIMENSIONS: MM (INCHES)

Specifications are subject to change without notice.
Users should verify actual device performance in their specific applications.
The products described herein and this document are subject to specific legal disclaimers as set forth on the last page of this document, and at www.bourns.com/docs/legal/disclaimer.pdf.

Downloaded from Arrow.com.

Installation

Electrical Wiring		
	High Side	**Low Side**
Current Only ±1500 VDC MAX.	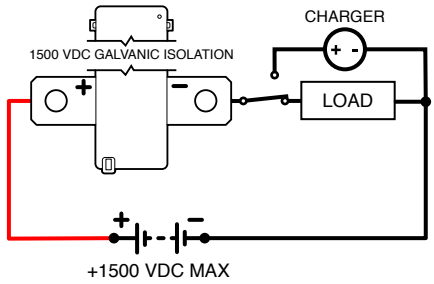	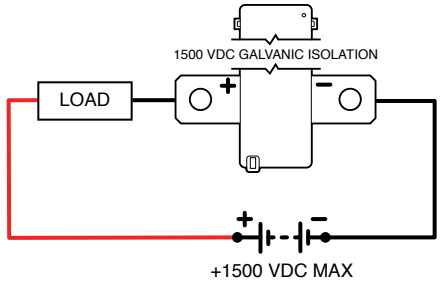
Bus Voltage Measurements ±1200 VDC	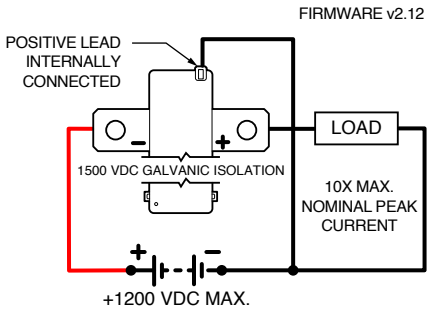 Use SETMODE Command to Invert Current and Voltage. Keep Positive DC Connection Short to Minimize Bus Voltage Drop Errors.	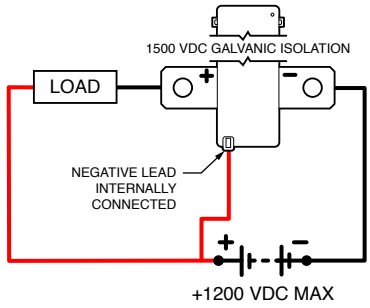 Keep Negative DC Connection Short to Minimize Bus Voltage Drop Errors.

Specifications are subject to change without notice.
Users should verify actual device performance in their specific applications.
The products described herein and this document are subject to specific legal disclaimers as set forth on the last page of this document, and at www.bourns.com/docs/legal/disclaimer.pdf.

Downloaded from Arrow.com.

Connectors

Connectors on both sides have same pinout. Either or both connectors can be used.

RS-485

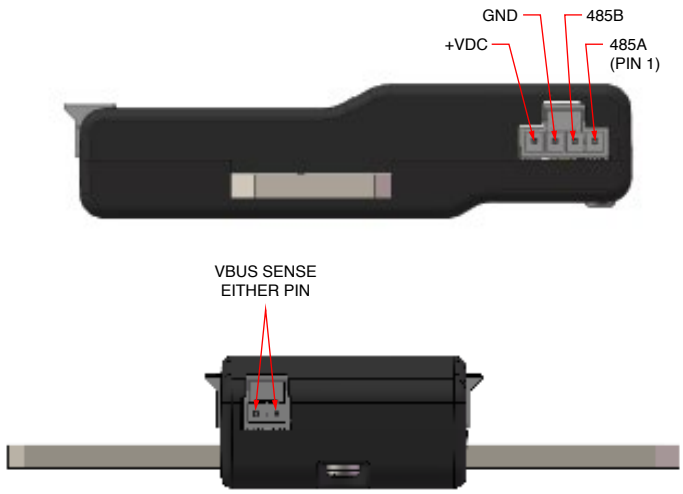

Specifications are subject to change without notice.
Users should verify actual device performance in their specific applications.
The products described herein and this document are subject to specific legal disclaimers as set forth on the last page of this document, and at www.bourns.com/docs/legal/disclaimer.pdf.

Downloaded from Arrow.com.

Optional Base Mounting Fixtures

SSA-BASE

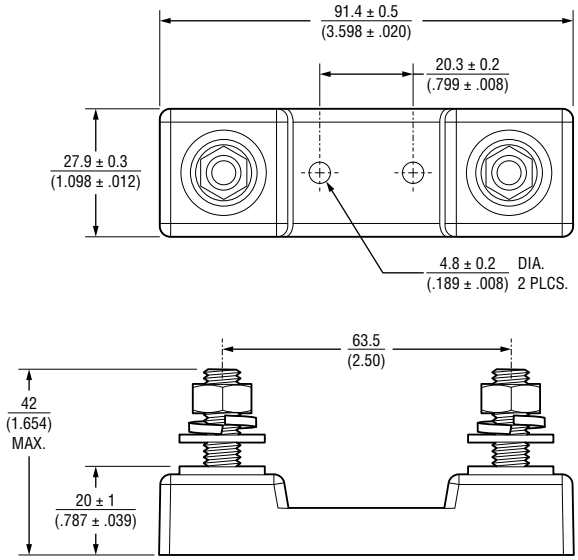

DIMENSIONS: MM (INCHES)

SSA-BASE-1K

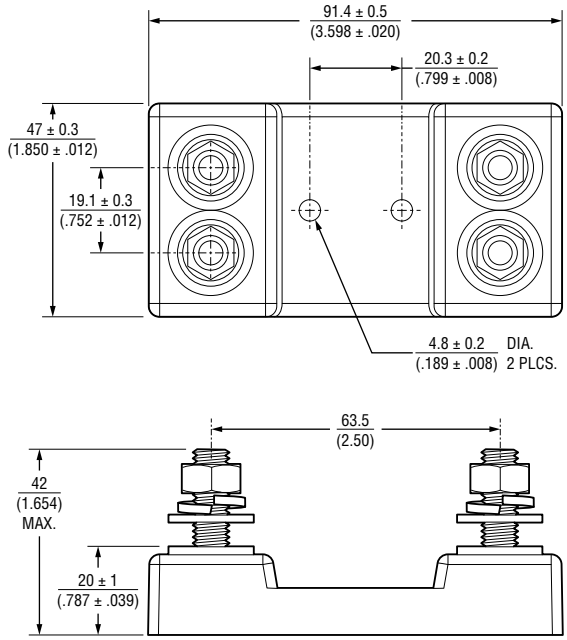

DIMENSIONS: MM (INCHES)

- Robust design
- 5/16-18 Stainless Steel Hardware
- Torque Nuts:
  11-13 ft-lb (15-17.6 N-m)
- UL 94-V0 rated materials

Optional SS-CABLE Power / Serial Connection

SS-CABLE-1M

Serial Output		
White	CANL / 485A	Pin 1
Yellow	CANH / 485B	Pin 2
Black	Ground	Pin 3
Red	+5 to 60 VDC	Pin 4

- For all SSD models
- Color-coded 22 ga wire
- Two twisted pairs
- 1 meter standard length

Specifications are subject to change without notice.
Users should verify actual device performance in their specific applications.
The products described herein and this document are subject to specific legal disclaimers as set forth on the last page of this document, and at www.bourns.com/docs/legal/disclaimer.pdf.

Downloaded from Arrow.com.

Optional SSD Connector Sets

SSD-CONN-SET

Standard Connector Set		
Includes	**Molex P/N**	**Description**
1 pc.	1053071204	4-Pin Female
1 pc.	1053071202	2-Pin Female
6 pcs.	1053002200	20-22 AWG Female Crimp Terminals
1 pc.	1053251004	4-Pin TPA
1 pc.	1053251002	2-Pin TPA

Optional SSD Serial Connection Kit

SSD-SERKIT

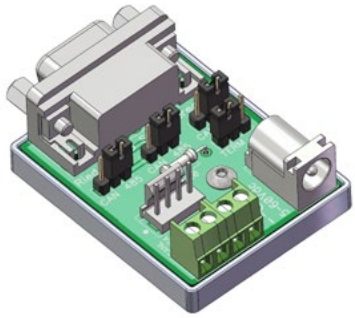

Serial Connection Kit	
Includes	**Description**
1 pc.	SSD to DB-9F Serial Adapter
1 pc.	5 VDC USB Power Cable
1 pc.	4-Pin Programming Cable (1 m Length)

The SSD serial connection kit simplifies the initial setup of the SSD Series Digital Current Sensor. It includes the necessary components to connect USB to CAN and USB to RS-485 serial adapters that have a 9-pin DB-9 male output connector. It includes jumpers to switch from RS-485 to CANbus and enable a termination resistor. USB to serial adapter not included.

USB to RS-485 Adapter - From DTEK, StarTech and others with RS-485 on DB9 pins 1 and 2 and the ground on pin 5. Note: Some adapters have the 485A and 485B pins reversed.

USB to CANbus adapter - From PEAK, Kvaser and others with CAN on DB9 pins 2 and 7 and the ground on pin 3.

Specifications are subject to change without notice.
Users should verify actual device performance in their specific applications.
The products described herein and this document are subject to specific legal disclaimers as set forth on the last page of this document, and at www.bourns.com/docs/legal/disclaimer.pdf.

Downloaded from Arrow.com.

Frequently Asked Questions

Q: Is it necessary to install the Model SSD on the low side of the circuit?

A: The Model SSD Digital Current Sensor is completely isolated, so it may be installed in either the low or high side of the circuit.

Q: The sensor is only sending whole Coulombs and Watt-hours, how precise are these?

A: Internally, micro-coulombs and micro-joules are counted; so very short ADC timing intervals and very low currents are accurately counted.

Q: What is the best way to connect to the SSD Series terminals?

A: Make sure connections are clean and well prepared. Bolts to be torqued to the hardware manufacturer's recommendations. There should be sufficient clamping force to ensure proper connection. Overlap shown below should be taken as a minimum. Suitable for Copper, Copper-Clad Aluminum or Aluminum conductors.

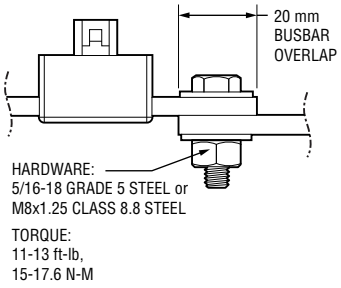

Q: What is the best way to cool the Model SSD Digital Current Sensor?

A: A majority of the heat generated by the SSD is dissipated through the primary conductors. Care should be taken to ensure that the primary conductors are sized appropriately given expected amperage and conductor length. Bourns recommends a 115 °C maximum conductor temperature at rated current. If there are thermal concerns, oversizing the conductors will help minimize the operating temperature of the Digital Current Sensor.

Q: When should I use the SSD version with the internal 120 Ω termination resistor (-T)?

A: The -T version includes a built-in 120 Ω resistor between CANH/CANL or 485A/485B. Typical RS485 or CANbus networks require termination at two endpoints. Use the -T version accordingly. Avoid using more than two termination points to ensure proper communication.

Q: What size wire is suitable for the SSD Series?

A:

Copper Conductor Ampacity Ratings (continuous)					
mm²	AWG	Amps (75 °C)	mm²	AWG	Amps (75 °C)
13.3	6	65	107	0000 (4/0)	230
21.2	4	85	127	250 MCM	255
33.6	2	115	152	300 MCM	285
42.4	1	130	203	400 MCM	335
54	0 (1/0)	150	253	500 MCM	380
67	00 (2/0)	175	380	750 MCM	475
85	000 (3/0)	200	887	1500 MCM	625

Specifications are subject to change without notice.
Users should verify actual device performance in their specific applications.
The products described herein and this document are subject to specific legal disclaimers as set forth on the last page of this document, and at www.bourns.com/docs/legal/disclaimer.pdf.

Downloaded from Arrow.com.

SSD Interface Manual

Name	Size	Units	Range
Current	Signed int32	1 mA	± 20 X Nominal
Temperature	Signed int32	0.1 °C	-40 °C to +125 °C*
Bus Voltage (Vbus)	Signed int32	1 mV	±1200 VDC
Coulomb	Signed int64	C (A•s)	$\pm 2^{60}$
Power	Unsigned int32	0.1 W	0 to 2^{32}
Energy	Unsigned int64	W•h	0 to 2^{60}

*Values outside specification are reported.

This sensor is software selectable between plain RS485 or MODBUS RTU. If changing from one format to the other, set SET MODE configuration bit2 to the correct value (page 16), save settings to EEPROM (RESET COMMAND page 15), then reboot the sensor. It will boot to the correct format.

STANDARD RS485

Default COM Settings – 19200 baud, 8 bits, No Parity, 1 Stop (no echo)

Message Format

:1XX1234<cr>

All SSD commands begin with a colon ':'
Then the sensor address (1 to 255)
Then a two letter command
Then an optional value
Command is terminated with a <cr>
Line feeds <lf> are ignored
NOTE: In RS485 mode, the SSD sensor does not check to see if bus is free when sending data.
Use caution when enabling automatic sending modes.

MODBUS RTU

Default COM Settings – 19200 baud, 8 bits, No Parity, 2 Stop

MODBUS registers larger than 16 bits have a little-endian byte swap format.
MODBUS is a purely master / slave protocol with the SSD sensor as a slave device.

Specifications are subject to change without notice.
Users should verify actual device performance in their specific applications.
The products described herein and this document are subject to specific legal disclaimers as set forth on the last page of this document, and at www.bourns.com/docs/legal/disclaimer.pdf.

Downloaded from Arrow.com.

SSD Interface Manual (continued)

MODBUS RTU
The following two tables show the locations of the SSD Input and Holding Registers.
See the standard RS485 commands for detailed descriptions of each register.
Modbus Poll files are available for easy setup as shown below.

MODBUS Input Registers		
0	Current	0
1		–
2	Temperature	0
3		–
4	Bus Voltage	0
5		–
6	Charge	0
7		–
8		–
9		–
10	Power	0
11		–
12	Energy	0
13		–
14		–
15		–
16	Errors	0000 0000 0000 0000
17	Firmware Version	0x0204
18	Serial Number	1234
19	–	
20	Restart Causes	0x0000

MODBUS registers larger than 16 bits have a little-endian byte swap format.

The sensor does not respond to broadcast messages on address Ø.

MODBUS Holding Registers		
0	RESET (Write Only)	0x0000
1	ADDRESS	1
2	SETMODE	0x0006
3	A2D CONFIG	0x335C
4	BAUD RATE	3
5	Read Delay (ms)	1000
6	Current Under Limit (A)	0
7	Current Over Limit (A)	0
8	Temperature Over Limit (°C)	125
9	VBUS Under Limit (V)	0
10	VBUS Over Limit (V)	0
11	Power Over Limit (W)	0
12		–
13	Shunt Nano-Ohms	120000
14		–
15	Current Offset (mA)	0
16	Vbus Factor	10000
17	Vbus Offset (mV)	0
18	Temp Offset (0.1 °C)	0
19	TC0	50000
20	TC1	0
21		–
22	TC2	0
23		–
24	Reserved	0
25		–

NOTE: No settings are saved until a save settings to EEPROM command is issued!
Power cycling will restore previous settings. Write 0x0F to Holding Register 0.

Specifications are subject to change without notice.
Users should verify actual device performance in their specific applications.
The products described herein and this document are subject to specific legal disclaimers as set forth on the last page of this document, and at www.bourns.com/docs/legal/disclaimer.pdf.

Downloaded from Arrow.com.

SSD Interface Manual (continued)

RS485 Command List

Note: In the command examples an SSD sensor address of 1 (default) is used.
If the address is changed, substitute the new value in the command.

READ Commands

GA	GET CURRENT
GT	GET TEMPERATURE
GV	GET BUS VOLTAGE
GC	GET COULOMBS
GP	GET POWER
GE	GET ENERGY
G!	GET ERRORS
GX	GET ALL ENABLED READINGS
VE	GET FIRMWARE VERSION
GS	GET SERIAL NUMBER
GM	GET MODE
GR	GET A2D CONFIG
GB	GET BAUD RATE
GD	GET READING DELAY
GF	GET CURRENT UNDER LIMIT
GG	GET CURRENT OVER LIMIT
GI	GET TEMPERATURE OVER LIMIT
GL	GET VBUS UNDER LIMIT
GQ	GET VBUS OVER LIMIT
GU	GET POWER OVER LIMIT
GN	GET SHUNT NANO-OHMS
GH	GET CURRENT OFFSET
GK	GET VBUS FACTOR
GJ	GET VBUS OFFSET
GO	GET TEMPERATURE OFFSET
GW	GET TC0
GY	GET TC1
GZ	GET TC2
RC	GET RESET CAUSES

WRITE Commands

RS	RESET COMMAND
SA	SET ADDRESS
SM	SET MODE
SR	SET A2D CONFIG
SB	SET BAUD RATE
SD	SET READING DELAY
SF	SET CURRENT UNDER LIMIT
SG	SET CURRENT OVER LIMIT
SI	SET TEMPERATURE OVER LIMIT
SL	SET VBUS UNDER LIMIT
SQ	SET VBUS OVER LIMIT
SU	SET POWER OVER LIMIT
SN	SET SHUNT NANO-OHMS
SH	SET CURRENT OFFSET
SK	SET VBUS FACTOR
SJ	SET VBUS OFFSET
SO	SET TEMPERATURE OFFSET

NOTE: No settings are saved until a save settings to EEPROM command is issued!
Power cycling will restore previous settings. See RESET command `:1RS0F<cr>`

Specifications are subject to change without notice.
Users should verify actual device performance in their specific applications.
The products described herein and this document are subject to specific legal disclaimers as set forth on the last page of this document, and at www.bourns.com/docs/legal/disclaimer.pdf.

Downloaded from Arrow.com.

SSD Interface Manual (continued)

GA GET CURRENT
Used to get the last current reading in milliamps

Send: `:1GA<cr>`
Receive: `A*****_<cr>`

GT GET TEMPERATURE
Used to get the last temperature reading in 0.1 °C

Send: `:1GT<cr>`
Receive: `T***_<cr>`

GV GET BUS VOLTAGE
Used to get the last temperature reading in millivolts

Send: `:1GV<cr>`
Receive: `V***_<cr>`

GC / SC GET / SET COULOMBS
Used to get the last coulomb count in Coulombs. Note: The coulomb reading can overflow! It is up to the user to check if very large values (> $\pm 2^{60}$) are expected. See G! command to read overflow bit.

Example: To set Coulombs to 500,000

WRITE
Send: `:1SC500000<cr>`
Receive: `(none)`

READ
Send: `:1GC<cr>`
Receive: `C******_<cr>`

GP GET POWER
Used to get the last power reading in 0.1 Watts

Send: `:1GP<cr>`
Receive: `P******_<cr>`

GE GET ENERGY
Used to get the last energy count in Watt-hours (Wh). Note: The energy reading can overflow! It is up to the user to check if very large values (> 2^{60}) are expected. See G! command to read overflow bit.

Send: `:1GE<cr>`
Receive: `E******_<cr>`

Specifications are subject to change without notice.
Users should verify actual device performance in their specific applications.
The products described herein and this document are subject to specific legal disclaimers as set forth on the last page of this document, and at www.bourns.com/docs/legal/disclaimer.pdf.

Downloaded from Arrow.com.

SSD Interface Manual (continued)

G! GET ERRORS

Used to get the error register to check sensor status. Returned data is an int16 which can be decoded below.

Send: `:1G!<cr>`
Receive: `!****_<cr>`

Returned ERROR / ALERT bits															
15	**14**	**13**	**12**	**11**	**10**	**9**	**8**	**7**	**6**	**5**	**4**	**3**	**2**	**1**	**0**
N/A	1 = ECC Single Bit	1 = EEPROM Corrupt	1 = EEPROM R/W	1 = ADC Initialization	1 = ADC CRC Read	1 = Energy Overflow	1 = Coulomb Overflow	1 = Power Over Limit	1 = Vbus Over Limit	1 = Vbus Under Limit	1 = Temp Over Limit	1 = Current Over Limit	1 = Current Under Limit	1 = Current Range Over	1 = Vbus Range Over

Bit0 Vbus Range Over - Bus Voltage exceeds the MAX voltage for the range selected, see **0X17** command

Bit1 Current Range Over - Peak current exceeded the range selected, see **0X17** command

Bit2 Current Under Limit - Current is below the limit set, see **0X18** command

Bit3 Current Over Limit - Current is above the limit set, see **0X19** command

Bit4 Temp Over Limit - Temperature is above +125 °C or the limit set, see **0X1A** command.

Bit5 Vbus Under Limit - Bus Voltage is below the limit set, see **0X1B** command

Bit6 Vbus Over Limit - Bus Voltage is above the limit set, see **0X1C** command

Bit7 Power Over Limit - Power is above the limit set, see **0X1D** command

Bit8 Coulomb Overflow - Coulombs have exceeded the range of $\pm 2^{47}$

Bit9 Energy Overflow - Energy has exceeded 2^{48}

Bit10 ADC CRC Read - The ADC's CRC doesn't match the calculated CRC of the returned data

Bit11 ADC Initialization - The ADC's initialized registers don't match the written values

Bit12 EEPROM R/W - Error reading or writing to the internal EEPROM

Bit13 EEPROM Corrupt - The EEPROM CRC doesn't match saved value

Bit14 ECC Single Bit Error - Flash Femory had an Auto-Correctable Error

NOTE: No settings are saved until a save settings to EEPROM command is issued!
Power cycling will restore previous settings. See RESET command `:1RS0F<cr>`

Specifications are subject to change without notice.
Users should verify actual device performance in their specific applications.
The products described herein and this document are subject to specific legal disclaimers as set forth on the last page of this document, and at www.bourns.com/docs/legal/disclaimer.pdf.

Downloaded from Arrow.com.

SSD Interface Manual (continued)

GX GET ALL ENABLED READINGS

Used to get all readings that are enabled in the SET MODE command (page 14).

Example:
If Send Current, Send Temperature, and Send Power are enabled the following will be returned.

Send: `:1GX<cr>`
Receive: `A******_T******_P******_<cr>`

VE GET FIRMWARE VERSION

Used to get the SSD firmware version.

Send: `:1VE<cr>`
Receive: `*.**_<cr>`

GS GET SERIAL NUMBER

Used to get the SSD Serial Number

Send: `:1G9<cr>`
Receive: `******_<cr>`

RS RESET COMMAND

Used to reset errors, coulomb count, and energy count. Can also save settings to EEPROM and restore default settings. Send hex codes shown.

Rebooting will restore previously saved settings if current settings are not saved. This will prevent baud rate or address change errors since you will need to connect with the new values before you can issue the save to EEPROM command.

0x01	- Reset Coulomb and Energy counters
0x04	- Reset Errors
0x0F	- Save settings to EEPROM
0XAA	- Reset settings to defaults (command must be sent 3X in a row)

Example: Reset Errors
Send: `:1RS04<cr>`
Receive: (none)

SA SET ADDRESS

Used to change the SSD address. Send the new address (1-255) and the SSD will immediately change to it. Connect with the new address and issue a save settings to EEPROM command, RS0F, otherwise the old address will be restored on reboot.

Example: Set SSD address from 1 to 25, then save settings to EEPROM.

Send: `:1SA25<cr>`
Receive: (none)

Send: `:25RS0F<cr>`
Receive: (none)

NOTE: No settings are saved until a save settings to EEPROM command is issued!
Power cycling will restore previous settings. See RESET command `:1RS0F<cr>`

Specifications are subject to change without notice.
Users should verify actual device performance in their specific applications.
The products described herein and this document are subject to specific legal disclaimers as set forth on the last page of this document, and at www.bourns.com/docs/legal/disclaimer.pdf.

Downloaded from Arrow.com.

SSD Interface Manual (continued)

GM / SM GET / SET MODE COMMAND
Used to change the sensor options.

Bit0 Invert Current – This will flip the Current and Coulomb signs if necessary.
Bit1 Autorange – Sensor will switch to high range if reading exceeds 85 % of standard range. It will switch back when reading drops to below 50 % of standard range. See A2D CONFIG for more info.
Bit2 Modbus Enable – Enables Modbus on reboot.
Bit3 Auto Reset Errors – Self clears errors once sent or read, the error will re-enable if it persists.
Bit4 Invert Voltage – Use for Highside Voltage Measurements.
Bit7 Send on Conversion – The sensor will send the latest data as soon as available per A2D CONFIG.
Bit8 Autosend – The sensor will send readings at the Read Delay timer interval unless Bit7 is enabled.
Bit9 to Bit15 – Enable the readings to be automatically sent. Otherwise read them manually.

Value is an unsigned Int16. SET MODE default is: 0x0002.
Example: Set SSD to Autorange, Autosend Current and Temperature at the read delay interval, and Autoreset Errors. (0x070A)
Send value in hex format.

WRITE	READ
Send: `:1SM070A<cr>`	Send: `:1GMcr>`
Receive: (none)	Receive: `070A<cr>`

SETMODE Configuration Bytes															
HEXCODE: 0000 Check boxes below to calculate HEX value															
☐	☐	☐	☐	☐	☐	☐	☐	☐	☐	☐	☐	☐	☐	☐	☐
15	**14**	**13**	**12**	**11**	**10**	**9**	**8**	**7**	**6**	**5**	**4**	**3**	**2**	**1**	**0**
1 = Send Errors/Alerts	1 = Send Energy Cnt	1 = Send Power	1 = Send Coulomb Cnt	1 = Send Vbus	1 = Send Temperature	1 = Send Current	1 = Autosend	1 = Send on Conversion	N/A	N/A	1 = Invert Voltage	1 = Auto Reset Errors/Alerts	1 = Modbus Enable (RS485 Only)	1 = Autorange	1 = Invert Current

NOTE: No settings are saved until a save settings to EEPROM command is issued!
Power cycling will restore previous settings. See RESET command `:1RS0F<cr>`

Specifications are subject to change without notice.
Users should verify actual device performance in their specific applications.
The products described herein and this document are subject to specific legal disclaimers as set forth on the last page of this document, and at www.bourns.com/docs/legal/disclaimer.pdf.

Downloaded from Arrow.com.

SSD Interface Manual (continued)

GB / SB GET / SET BAUD RATE

Used to set the SSD Baud Rate. Values other than the following are ignored.

Value	Baud Rate (bit/s)
0	9600
1	14400
2	19200 (default)
3	38400
4	57600
5	115200
6	230400
7	460800
8	921600

Notes: Baud rate is changed immediately. Connect using new baud rate and use RESET COMMAND (`RS0F`) to save current settings to EEPROM. If unable to connect, reboot to restore the previous setting.

Value is an unsigned Int16. BAUD RATE default is: 2
Example: To set Baud Rate to 115200 bps

WRITE		READ	
Send:	`:1SB5<cr>`	Send:	`:1GBcr>`
Receive:	(none)	Receive:	`5<cr>`

GD / SD GET / SET READING DELAY

Used to set the delay between readings automatically sent via RS485 (Not available with MODBUS). Autosend must be enabled (see SET MODE bit8). Note: If the Conversion Time is greater than the reading delay, the shunt will send the same value until the next set of readings is available. For readings faster than 5 ms use SET MODE Bit7 Send on Conversion. This will send the data as soon as it's available. Valid Range: 5 ms to 60000 ms.

Value is an unsigned Int16. READING DELAY default is: 1000 ms

Example: To set Reading Delay to 100 ms

WRITE		READ	
Send:	`:1SD100<cr>`	Send:	`:1GDcr>`
Receive:	(none)	Receive:	`100<cr>`

NOTE: No settings are saved until a save settings to EEPROM command is issued!
Power cycling will restore previous settings. See RESET command `:1RS0F<cr>`

Specifications are subject to change without notice.
Users should verify actual device performance in their specific applications.
The products described herein and this document are subject to specific legal disclaimers as set forth on the last page of this document, and at www.bourns.com/docs/legal/disclaimer.pdf.

Downloaded from Arrow.com.

SSD Interface Manual (continued)

GR / SR GET / SET A2D CONFIG REGISTER

A2D Configuration Register

HEXCODE: 0000

Check boxes below to calculate HEX value

N/A	Bus Voltage MAX Voltage			N/A	High Range MAX Current			N/A	Normal Range MAX Current			Reading Interval				Time (ms)
	☐	☐	☐		☐	☐	☐		☐	☐	☐	☐	☐	☐	☐	
15	14	13	12	11	10	9	8	7	6	5	4	3	2	1	0	
	0	0	0		0	0	0		0	0	0	0	0	0	0	0.9
	1200 VDC				40X Nominal				40X Nominal			0	0	0	1	1.6
	0	0	1		0	0	1		0	0	1	0	0	1	0	3.2
	600 VDC				20X Nominal				20X Nominal			0	0	1	1	4.8
	0	1	0		0	1	0		0	1	0	0	1	0	0	6.4
	300 VDC				10X Nominal				10X Nominal			0	1	0	1	7.2
	0	1	1		0	1	1		0	1	1	0	1	1	0	9
	150 VDC				5X Nominal				5X Nominal			0	1	1	1	13
	1	0	0		1	0	0		1	0	0	1	0	0	0	26
	75 VDC				2.5X Nominal				2.5X Nominal			1	0	0	1	51
					1	0	1		1	0	1	1	0	1	0	102
					1.25X Nominal				1.25X Nominal			1	0	1	1	205
	1	0	1		1	1	0		1	1	0	1	1	0	0	410
	37.5 VDC				0.63X Nominal				0.63X Nominal			1	1	0	1	820
					1	1	1		1	1	1	1	1	1	0	1640
					0.31X Nominal				0.31X Nominal			1	1	1	1	3280

NOTE: No settings are saved until a save settings to EEPROM command is issued!
Power cycling will restore previous settings. See RESET command `:1RS0F<cr>`

Specifications are subject to change without notice.
Users should verify actual device performance in their specific applications.
The products described herein and this document are subject to specific legal disclaimers as set forth on the last page of this document, and at www.bourns.com/docs/legal/disclaimer.pdf.

Downloaded from Arrow.com.

SSD Interface Manual (continued)

GR / SR GET / SET A2D CONFIG REGISTER (Continued)

Set the bits required for the application.

Notes:

High Range must be greater than or equal to the Normal Range. If SET MODE Bit1 (Autorange) is not set, High Range will be ignored. If it is set, the sensor will automaitcally switch between the two ranges specified when necessary.

Reading intervals 13 ms and below utilize hardware averaging, 26 ms and above start using software averaging with a 13 ms hardware interval time. If it is necessary to capture and report fast current spikes, use fast reading intervals otherwise they will be averaged out.

Set the Vbus MAX voltage to the highest peak voltage expected. If using the sensor on the highside with voltage measuring, use 300 VDC range or lower.

Value is an unsigned Int16. A2D CONFIG default is: 0x035D

Example: Vbus Max Voltage 300 VDC, High Range 5X Nominal, Normal Range 1.25X Nominal, Reading Interval 820 ms (0x335D). Send value in hex format.

WRITE		READ	
Send:	`:1SR335C<cr>`	Send:	`:1GRcr>`
Receive:	(none)	Receive:	`335C<cr>`

NOTE: No settings are saved until a save settings to EEPROM command is issued!
Power cycling will restore previous settings. See RESET command `:1RS0F<cr>`

Specifications are subject to change without notice.
Users should verify actual device performance in their specific applications.
The products described herein and this document are subject to specific legal disclaimers as set forth on the last page of this document, and at www.bourns.com/docs/legal/disclaimer.pdf.

Downloaded from Arrow.com.

SSD Interface Manual (continued)

GF / SF GET / SET CURRENT UNDER LIMIT

Used to configure the optional lower limit for current readings. Currents below this value will cause an error that can be read with the GET ERRORS command if errors aren't automatically sent. A zero value disables this alert, non-zero values enable alert.

Value is an signed Int16. Default CURRENT UNDER LIMIT: 0 (Disabled).

Example: Set the lower limit to 25 amps

WRITE		READ	
Send:	`:1SF25<cr>`	Send:	`:1G0<cr>`
Receive:	(none)	Receive:	`25<cr>`

GG / SG GET / SET CURRENT OVER LIMIT

Used to configure the optional upper limit for current readings. Currents above this value will cause an error that can be read with the GET ERRORS command if errors aren't automatically sent. A zero value disables this alert, non-zero values enable alert.

Value is an signed Int16. Default CURRENT OVER LIMIT: 0 (Disabled).

Example: Set the lower limit to 620 amps

WRITE		READ	
Send:	`:1SG620<cr>`	Send:	`:1G1<cr>`
Receive:	(none)	Receive:	`620<cr>`

GI / SI GET / SET TEMPERATURE OVER LIMIT

Used to configure the temperature limit for the error. Temperatures above this value will cause an error that can be read with the GET ERRORS command if errors aren't automatically sent.

Value is an unsigned Int16 in centigrade. Default TEMP OVER LIMIT: 125 °C (Cannot Disable)

Valid Range: 0 °C to +125 °C (MAX)

Example: Set the upper limit to 90 °C

WRITE		READ	
Send:	`:1SI90<cr>`	Send:	`:1G2<cr>`
Receive:	(none)	Receive:	`90<cr>`

GL / SL GET / SET VBUS UNDER LIMIT

Used to configure the optional lower limit for the bus voltage readings. Voltages below this value will cause an error that can be read with the GET ERRORS command if errors aren't automatically sent. A zero value disables this alert, non-zero values enable alert.

Value is a signed Int16 in volts. Default VBUS UNDER LIMIT: 0 (Disabled).

Example: Set the lower limit to 29 Volts

WRITE		READ	
Send:	`:1SL29cr>`	Send:	`:1G3<cr>`
Receive:	(none)	Receive:	`29<cr>`

NOTE: No settings are saved until a save settings to EEPROM command is issued!
Power cycling will restore previous settings. See RESET command `:1RS0F<cr>`

Specifications are subject to change without notice.
Users should verify actual device performance in their specific applications.
The products described herein and this document are subject to specific legal disclaimers as set forth on the last page of this document, and at www.bourns.com/docs/legal/disclaimer.pdf.

Downloaded from Arrow.com.

SSD Interface Manual (continued)

GQ / SQ GET / SET VBUS OVER LIMIT

Used to configure the optional upper limit for bus voltage readings. Voltages above this value will cause an error that can be read with the GET ERRORS command if errors aren't automatically sent. A zero value disables this alert, non-zero values enable alert.

Value is an signed Int16 in Volts. Default VBUS OVER LIMIT: 0 (Disabled).

Example: Set the upper limit to 70 Volts

WRITE		READ	
Send:	`:1SQ70cr>`	Send:	`:1G4<cr>`
Receive:	(none)	Receive:	`70<cr>`

GU / SU GET / SET POWER OVER LIMIT

Used to configure the optional upper limit for power readings. Power above this value will cause an error that can be read with the GET ERRORS command if errors aren't automatically sent. A zero value disables this alert, non-zero values enable alert.

Value is an unsigned Int32 in Watts. Default POWER OVER LIMIT: 0 (Disabled).

Example: Set the upper limit to 22000 Watts

WRITE		READ	
Send:	`:1SU22000cr>`	Send:	`:1G5<cr>`
Receive:	(none)	Receive:	`22000<cr>`

GN / SN GET / SET SHUNT NANO-OHMS

Used to override the resistance of the SSD from the factory calibration. This is typically not necessary and the correct equipment is essential to properly set it. Value can be reset back to factory defaults.

Value is an unsigned Int32 in nano-ohms.

Example: To set SHUNT NANO-OHMS to 300156 nano-ohms

WRITE		READ	
Send:	`:1SN300156cr>`	Send:	`:1GN<cr>`
Receive:	(none)	Receive:	`330156<cr>`

GH / SH GET / SET CURRENT ZERO OFFSET

Used to override the shunt zero offset current. Value can be reset back to factory defaults..

Value is a signed Int16 in mA.

Example: To set SHUNT OFFSET to +8 mA

WRITE		READ	
Send:	`:1SH8cr>`	Send:	`:1GH<cr>`
Receive:	(none)	Receive:	`8<cr>`

NOTE: No settings are saved until a save settings to EEPROM command is issued!
Power cycling will restore previous settings. See RESET command `:1RS0F<cr>`

Specifications are subject to change without notice.
Users should verify actual device performance in their specific applications.
The products described herein and this document are subject to specific legal disclaimers as set forth on the last page of this document, and at www.bourns.com/docs/legal/disclaimer.pdf.

Downloaded from Arrow.com.

SSD Interface Manual (continued)

GK / SK GET / SET VBUS FACTOR

Used to adjust the Bus Voltage reading from the factory calibration. This is typically not necessary and the correct equipment is essential to properly set it. See reset command to set the value back to factory default. Voltage is calibrated at 25 °C. Power and Energy values are scaled appropriately.

Value is an unsigned Int16. Value is divided by 10000 in firmware to create the factor.

Example: To set VBUS FACTOR to 10023

WRITE		READ	
Send:	`:1SK10023cr>`	Send:	`:1GK<cr>`
Receive:	(none)	Receive:	`10023<cr>`

GJ / SJ GET / SET VBUS ZERO OFFSET

Used to override the bus voltage zero offset. Value can be reset back to factory defaults.

Value is a signed Int16 in mV.

Example: To set VBUS OFFSET to -6 mV

WRITE		READ	
Send:	`:1SJ-6cr>`	Send:	`:1GJ<cr>`
Receive:	(none)	Receive:	`-6<cr>`

GO / SO GET / SET TEMPERATURE OFFSET

Used to adjust the Temperature reading from the factory calibration. This is typically not necessary. See reset command to set the value back to factory default.

Value is an Signed Int16 in 0.1 °C

Example: To set TEMP OFFSET to -2.2 °C send -22

WRITE		READ	
Send:	`:1SO-22<cr>`	Send:	`:1GO<cr>`
Receive:	(none)	Receive:	`-22<cr>`

NOTE: No settings are saved until a save settings to EEPROM command is issued!
Power cycling will restore previous settings. See RESET command `:1RSOF<cr>`

Specifications are subject to change without notice.
Users should verify actual device performance in their specific applications.
The products described herein and this document are subject to specific legal disclaimers as set forth on the last page of this document, and at www.bourns.com/docs/legal/disclaimer.pdf.

Downloaded from Arrow.com.

SSD Interface Manual (continued)

GW GET TC0 (read only)
GY GET TC1 (read only)
GZ GET TC2 (read only)
Used to get the factory calibrated settings for the temperature compensation constants.

TC0 - unsigned int16
TC1 - signed int32
TC2 - signed int32
Example: To get the compensation constant TC2

Send: `:1GZ<cr>`
Receive: `3089694<cr>`

RC GET RESET CAUSES (read only)
Used to read the reasons for the last four SSD sensor restarts.
Value is an unsigned Int16
Example: The following shows abnormal restarts (0x0140)

READ
Send: `:1RC<cr>`
Receive: `0x0140<cr>`

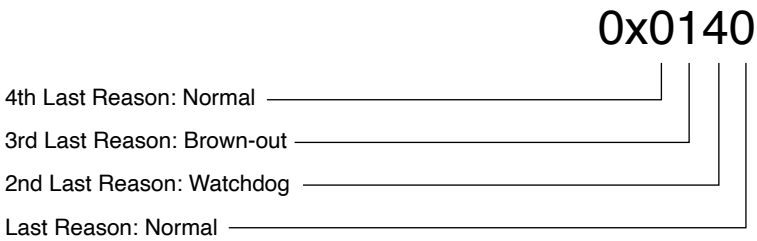

Reason Codes
0 - Normal Power-on Reset
1 - Brown-out Reset
4 - Watchdog Timer Time-Out Reset
6 - Software RESET Instruction
7 - Master Clear Pin Reset
9 - Configuration Mismatch Reset
E - Illegal Condition Device Reset
- Illegal Opcode Reset
- Uninitialized W Register Reset
- Security Reset

F - Trap Conflict Reset

Downloaded from Arrow.com.

SSD Interface Manual (continued)

Firmware Revisions-

v2.10
Added Invert Bus Voltage bit to SETMODE command for highside sensor mounting.

v2.11
Updated internal ADC settings to reduce noise. This reduces some of the fixed ADC reading intervals.
Fixed reading Coulombs and Energy manually after changing CAN IDs

v2.12
Bus Voltage is now signed int32, ±1200 VDC
Current and Voltage Under and Over limits are now signed int16
Can now write Coulomb value to sensor and the sensor will count from there.

BOURNS®

Americas: Tel: +1 951-781-5500 • Email: americus@bourns.com
Mexico: Tel: +52-614-478-0400 • Email: mexicus@bourns.com
Asia: Tel: +886-2-2562-4117 • Email: asiacus@bourns.com
EMEA: Tel: +36 88 885 877 • Email: eurocus@bourns.com
www.bourns.com

REV. 10/25

Specifications are subject to change without notice.
Users should verify actual device performance in their specific applications.
The products described herein and this document are subject to specific legal disclaimers as set forth on the last page of this document, and at www.bourns.com/docs/legal/disclaimer.pdf.
"Bourns" is a registered trademark of Bourns, Inc. in the United States and other countries.
In April 2023, BE Services Company, Inc., a subsidiary of Bourns, Inc., purchased certain assets of Riedon, Inc., including its logo and trademarks and the right to continue to manufacture former Riedon™ products.
"Riedon" is a trademark of BE Services Company, Inc.

Downloaded from Arrow.com.

Legal Disclaimer Notice

BOURNS®

This legal disclaimer applies to purchasers and users of Bourns® products manufactured by or on behalf of Bourns, Inc. and its affiliates (collectively, "Bourns").

Unless otherwise expressly indicated in writing, Bourns® products and data sheets relating thereto are subject to change without notice. Users should check for and obtain the latest relevant information and verify that such information is current and complete before placing orders for Bourns® products.

The characteristics and parameters of a Bourns® product set forth in its data sheet are based on laboratory conditions, and statements regarding the suitability of products for certain "typical" applications are based on Bourns' knowledge of typical requirements in generic applications. Bourns assumes that "typical" applications include failsafe/backup features to address critical risks to users and are designed to allow rework of Bourns® product to avoid scrap of a device solely due to malfunctioning Bourns® product. The characteristics and parameters of a Bourns® product in a user application may vary from the data sheet characteristics and parameters due to (i) the combination of the Bourns® product with other components in the user's application, or (ii) the environment of the user application itself. The characteristics and parameters of a Bourns® product also can and do vary in different applications and actual performance may vary over time. Thus, users should always verify the actual performance of the Bourns® product in their specific devices and applications and make their own independent judgments regarding the suitability of Bourns® product and the amount of additional test margin to design into their device or application to compensate for differences between laboratory and real-world conditions.

Unless Bourns has explicitly designated an individual Bourns® product as meeting the requirements of a particular industry standard (e.g., IATF 16949) or a particular qualification (e.g., UL listed or recognized), Bourns is not responsible for any failure of an individual Bourns® product to meet the requirements of such industry standard or particular qualification even if such industry standard or qualification is a "state of art". Users of Bourns® products are responsible for ensuring compliance with safety-related requirements and standards applicable to their devices or applications.

Bourns® products are not recommended, authorized or intended for use in applications where failure or malfunction may result in personal injury, death, or severe property or environmental damage, such as without limitation nuclear, life-critical medical and certain automotive and aviation applications. Except as set forth in the bullet points below or unless expressly and specifically approved in writing on a case-by-case basis by an authorized Bourns' representative, use of any Bourns® products in such unauthorized high-risk applications is at the user's sole risk.

- Bourns considers implantable/invasive devices and devices/procedures designed as life-supporting or life-sustaining by the U.S. Food and Drug Administration or equivalent organizations outside of the United States as "life-critical" medical applications. Bourns expressly identifies those Bourns® standard products that are suitable for use in typical medical applications that are not life-critical in its publication entitled "Bourns Medical Grade Component Guide."

- Bourns expressly identifies those Bourns® standard products that are suitable for use in typical automotive applications associated with any Automate Safety Integrity Level (ASIL) in its publication entitled "Bourns Automotive Grade Component Guide." Bourns' designation of Bourns® product as compliant with the AEC-Q standard does not by itself mean that Bourns has approved such product for use in an automotive application.

- Bourns expressly identifies Bourns® standard products that are suitable for use in the typical aviation applications/systems requiring System Design Assurance Level (RTCA DO-254 DAL) of C, D or E in its publication entitled "Bourns Civilian Aerospace/Aviation Grade Component Guide." Bourns does not test its products for compliance with United States Federal Aviation Administration standards or any other generally equivalent governmental organization standard applicable to products designed or manufactured for use in aviation applications. Use of Bourns® standard components in aviation applications associated with RTCA DO-254 DAL A or B without proper approval noted above shall be at the user's sole risk.

- Bourns will review and authorize on a case-by-case basis the use of Bourns® standard products which are at least AEC-Q compliant in space-related civil applications (rockets, satellites) with a negotiated cross-waiver and indemnity agreement.

The use and level of testing applicable to Bourns® custom products shall be negotiated on a case-by-case basis by Bourns and the user for which such Bourns® custom products are specially designed. Absent a written agreement between Bourns and the user regarding the use and level of such testing, the above provisions applicable to Bourns® standard products shall also apply to such Bourns® custom products.

Use of Bourns® products or Bourns' technology in military/defense applications must be reviewed with Bourns for compliance with applicable export control laws and embargoes. Users shall not sell, transfer, export or re-export (which includes transfers within a country) any Bourns® products or technology or technical data for use in activities which involve the design, development, production, use or stockpiling of nuclear, chemical or biological weapons or missiles, nor shall they use Bourns® products or technology or technical data in any facility which engages in activities relating to such devices. Further, Bourns® products and Bourns' technology and technical data may not under any circumstance be exported or re-exported to countries subject to international sanctions or embargoes. Bourns® products and technology may not, without prior authorization from Bourns and/or the Government of a country where such product/technology is designed and/or manufactured, be resold, transferred, or re-exported (including within the same country) to any party not eligible to receive commodities, software, and technical data originating in such country.

To the maximum extent permitted by applicable law, Bourns disclaims (i) any and all liability for special, punitive, consequential, incidental or indirect damages or lost revenues or lost profits, and (ii) any and all implied warranties (those not based on parameters specified in Bourns' data sheets and/or specifications), including implied warranties of fitness for particular purpose, non-infringement and merchantability.

For your convenience, copies of this Legal Disclaimer Notice with German, Spanish, Japanese, Traditional Chinese and Simplified Chinese bilingual versions are available at:

Web Page: https://www.bourns.com/legal/disclaimers-terms-and-policies
PDF: https://www.bourns.com/docs/Legal/disclaimer.pdf

Downloaded from Arrow.com.