PRODUCT NUMBER: 122-13-652-41-001000

www.mill-max.com
DATA SHEET

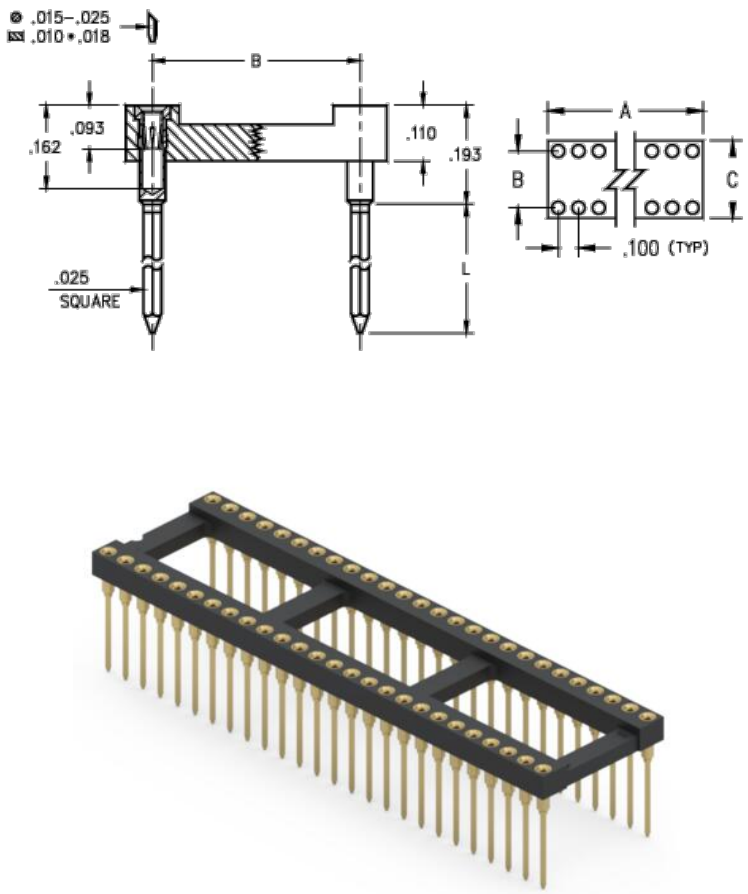

General Info	
Description[1]:	Wire-Wrap DIP Socket
Type:	DIP
Category:	Dual In Line Socket
Tail Type:	Wire-Wrap Tail
# Pins:	52
Packaging:	Packaged in Tubes
Qty Tube:	7
Frame Type:	Open Frame
ECCN:	EAR99
HTSUS:	8536.90.4040
Product Lifecycle:	Active

(c)2024 Mill-Max Mfg Corp. | 516-922-6000
190 Pine Hollow Road, Oyster Bay, NY 11771

Downloaded from Arrow.com.

122-13-652-41-001000- SPECIFICATIONS

Environmental Specs	
Temperature Range[2]:	-55/+125° C
Shock[3]:	No Elect. Discontinuity > 1µs @ 50g
Vibration[4]:	No Elect. Discontinuity > 1µs @ 10-2000HZ, 15 G
RoHS[5]:	Yes
Moisture Sensitivity Level (MSL):	1 (Unlimited)
REACH Status:	REACH Unaffected

Mechanical Specs	
Durability[6]:	1,000 Cycles Minimum

Materials	
Loose Pin/Receptacle # (Material):	0089 (Brass Alloy)
Shell Plating:	10 µ" Gold over 100 µ" Nickel
Inner Contact #:	30
# Contact Fingers:	4
Inner Contact Material:	Beryllium Copper
Inner Contact Plating:	30 µ" Gold over 50 µ" Nickel
Insulator Material:	High Temp Thermoplastic

Technical Specs	
Pitch:	.100" (2,540mm)
A Dim:	2.600" (66,040mm)
B Dim:	.600" (15,240mm)
C Dim:	.700" (17,780mm)
L Dim:	.370" (9,398mm)

Electrical Specs	
Current Rating[7]:	3 Amps
Contact Resistance[8]:	10 mΩ max.
Rated Voltage:	100 VRMS/150 VDC
Insulation Resistance:	10,000 MΩ min.
Dielectric Withstanding Voltage:	1,000 VRMS min.

(c)2024 Mill-Max Mfg Corp. | 516-922-6000
190 Pine Hollow Road, Oyster Bay, NY 11771

Downloaded from Arrow.com.

NOTES:

1. Standard Tolerances:
   Assembly tolerance: +/-.010" (.25mm)
   Insulator length: +/-.005 (.13mm)
   Insulator width: +/-.005 (.13mm)
   Insulator height: +/-.005 (.13mm)
   Pin Length: +/-.005 (.13mm)
   Pin Diameter: +/-.002 (.051mm)
   Pin Angle: +/-2°
   Co-planarity of SMT connectors: .005" (.13mm) up to 1" (25.4mm) in connector length
   Insulator Flatness: .005" (.13mm) up to 1" (25.4mm) in connector length
2. Per IEC 60512-11-(4,-9,-10,-12)
3. For discrete pin only. Per IEC 60512-6-3: Test 6c: Shock
4. For discrete pin only. Per IEC 60512-6-4: Test 6d: Vibration (sinusoidal)
5. Mill-Max products labeled with the RoHS symbol are compliant with all three ROHS Directives. All of our products previously described as RoHS (2002/95/EC) and RoHS-2 (2011/65/EC) are also compliant with RoHS-3 (2015/863/EU).
6. Receptacles are capable of 1,000 Minimum insertion/extraction cycles for a broad range of applications. Mating pin size, shape and finish, along with application specific variables, will affect the life of a receptacle contact.
7. Per IEC 60512-5-1, Current Carrying Capacity (evaluated at 10˚ C Temp. Rise)
8.

ADDITIONAL NOTES AND SPECIFICATIONS

In the interest of improved design, quality and performance , Mill-Max reserves the right to make changes in its specifications without prior notice. Specifications and tolerances are provided wherever possible. The tolerance on dimensions of critical to function features is typically held tighter than the stated standard tolerances, such as press-fits, holes and lengths affecting the coplanarity of SMT products. Due to the wide variety of interconnects Mill-Max offers, the specific tolerances vary from product to product. If you need information regarding the tolerance of a particular part, please contact Technical Services.

RELATED LINKS AND DOCUMENTS

Environmental Compliance: (https://www.mill-max.com/rohs)

Downloaded from Arrow.com.