Alle Rechte vorbehalten/ *All rights reserved*

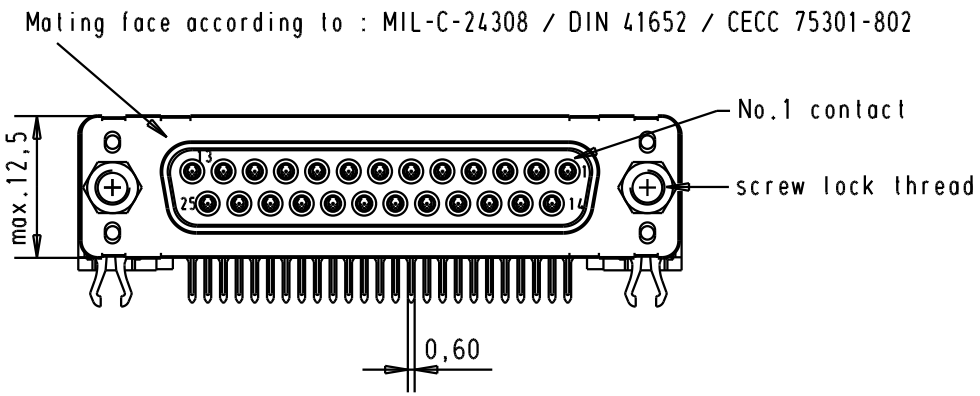

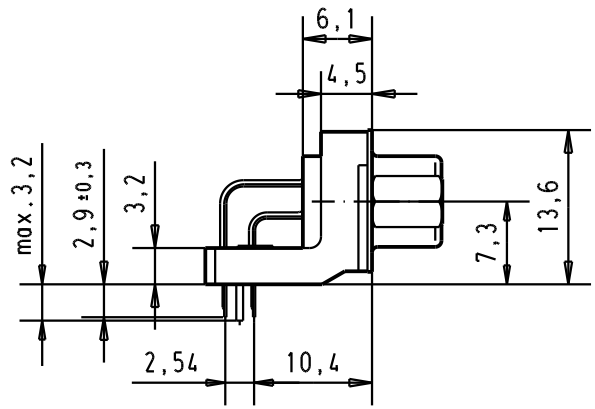

Printed board layout
component side

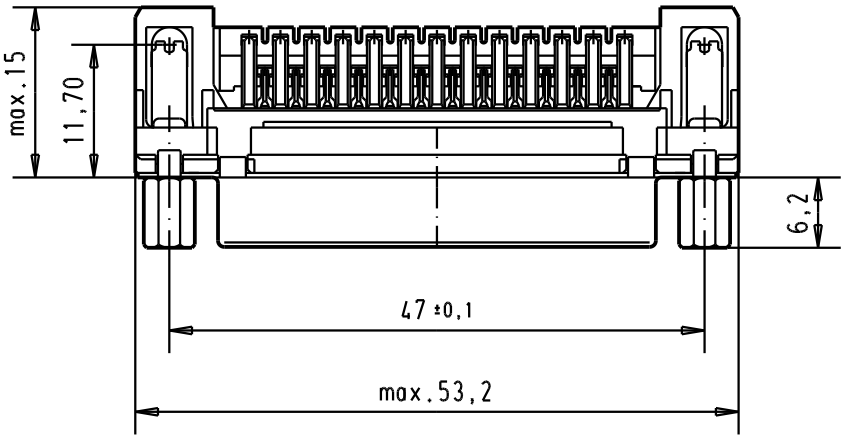

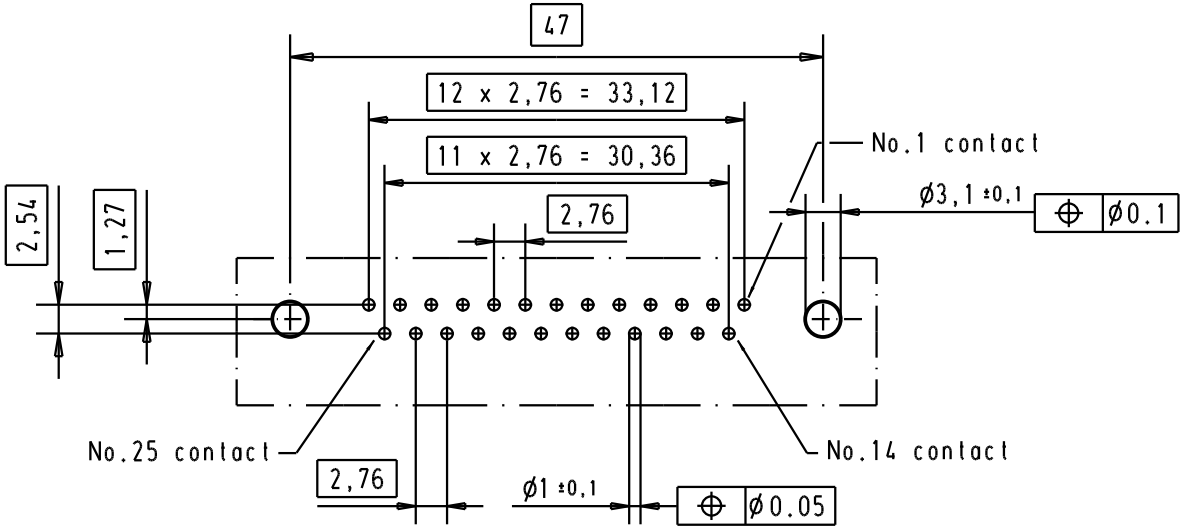

Connector retention and insertion forces on the PCB = 25 / 80 newtons

Part number	Screw lock thread	Performance level	Mod.	Dat.	Name
09 66 356 3633	M3	1			
09 66 356 6633	M3	2			
09 66 356 7633	M3	3			
09 66 356 3613	4-40 UNC	1			
09 66 356 6613	4-40 UNC	2	31892	05/05/04	JH
09 66 356 7613	4-40 UNC	3	31084	04/09/02	YT

	Dat.	Name
Detail.	04/09/02	YT
Insp.		
Stand.		

All Dim. in mm
Orig. Size DIN A 4

D-Sub, High temperature, female ,standard, 25 poles with solder pins 2,9mm, screw lock and grounding board lock.

Maßstab/ *Scale* 1.5:1

HARTING EURL
F-95972 Paris

TB 0966356x6x3

Sub.

Blatt/ *Page* 1

Downloaded from Arrow.com.