SERIES: PYSE1-D | **DESCRIPTION:** DC-DC CONVERTER

FEATURES

- 1 W isolated output
- single unregulated output
- compact DIP package
- continuous short circuit protection
- 1500 Vdc isolation
- no load input current as low as 8 mA
- extended temperature range (-40~105°C)
- efficiency up to 81%
- UL 62368
- designed to meet EN/BS EN 62368

MODEL

MODEL	input voltage typ (Vdc)	input voltage range (Vdc)	output voltage (Vdc)	output current min (mA)	output current max (mA)	output power max (W)	ripple & noise[1] max (mVp-p)	efficiency[2] typ (%)
PYSE1-S12-S3-D	12	10.8~13.2	3.3	30	303	1	75	75
PYSE1-S12-S5-D	12	10.8~13.2	5	20	200	1	75	80
PYSE1-S12-S9-D[3]	12	10.8~13.2	9	12	111	1	75	78
PYSE1-S12-S12-D	12	10.8~13.2	12	9	83	1	75	80
PYSE1-S12-S15-D	12	10.8~13.2	15	7	67	1	75	81
PYSE1-S12-S24-D	12	10.8~13.2	24	5	42	1	100	81
PYSE1-S15-S5-D[3]	15	13.5~16.5	5	20	200	1	75	80
PYSE1-S15-S9-D[3]	15	13.5~16.5	9	12	111	1	75	80
PYSE1-S15-S15-D[3]	15	13.5~16.5	15	7	67	1	75	81
PYSE1-S24-S3-D	24	21.6~26.4	3.3	30	303	1	75	75
PYSE1-S24-S5-D	24	21.6~26.4	5	20	200	1	75	79
PYSE1-S24-S9-D[3]	24	21.6~26.4	9	12	111	1	75	80
PYSE1-S24-S12-D	24	21.6~26.4	12	9	83	1	75	81
PYSE1-S24-S15-D	24	21.6~26.4	15	7	67	1	75	81
PYSE1-S24-S24-D	24	21.6~26.4	24	5	42	1	100	81

Notes:
1. Ripple and noise are measured using the parallel cable method at 20 MHz bandwidth.
2. Efficiency is measured In nominal input voltage and rated output load.
3. Model is not UL or CE certified.

PART NUMBER KEY

PYSE1 - SXX - SXX - D

- PYSE1 — Base Number
- SXX — Input Voltage
- SXX — Output Voltage
- D — Mounting Style: D = DIP

Please read our datasheet & drawing disclaimer here.

Downloaded from Arrow.com.

INPUT

parameter	conditions/description		min	typ	max	units
input voltage	12 Vdc input models		10.8	12	13.2	Vdc
	15 Vdc input models		13.5	15	16.5	Vdc
	24 Vdc input models		21.6	24	26.4	Vdc
filter	capacitance filter					
current[3]	12 Vdc input models	3.3 Vdc output models			118	mA
		5, 9, 12 Vdc output models			110	mA
		15, 24 Vdc output models			109	mA
	15 Vdc input models	5, 9 Vdc output models			88	mA
		15 Vdc output models			87	mA
	24 Vdc input models	3.3 Vdc output models			61	mA
		5 Vdc output models			58	mA
		9 Vdc output models			57	mA
		all other output models			56	mA

Note: 3. At full load.

OUTPUT

parameter	conditions/description		min	typ	max	units
output capacitance	3.3, 5 Vdc output models				2,400	µF
	9 Vdc output models				1,200	µF
	12, 15 Vdc output models				560	µF
	24 Vdc output models				220	µF
voltage accuracy	see output regulation curves					
line regulation	input voltage change: ±1%	3.3 Vdc output models			1.5	%
		all other output models			1.2	%
load regulation	10% ~ 100% load	3.3 Vdc output models			20	%
		5 Vdc output models			15	
		all other output models			10	
switching frequency	at full load, nominal input			260		kHz
temperature coefficient	at full load			±0.02		%/°C

PROTECTIONS

parameter	conditions/description	min	typ	max	units
short circuit protection	continuous, auto recovery				

SOLDERABILITY

parameter	conditions/description	min	typ	max	units
pin soldering resistance temperature	soldering spot is 1.5 mm away from case for 10 seconds			260	°C

Downloaded from Arrow.com.

SAFETY AND COMPLIANCE

parameter	conditions/description	min	typ	max	units
isolation voltage	input to output for 1 minute at 1 mA	1,500			Vdc
isolation resistance	input to output at 500 Vdc	1,000			MΩ
isolation capacitance	input to output, 100 kHz / 0.1 V		20		pF
safety approvals	certified to 62368: UL designed to meet 62368: EN, BS EN				
conducted emmisions	CISPR 32/EN 55032 Class B				
radiated emmisions	CISPR 32/EN 55032 Class B				
ESD	IEC/EN 61000-4-2 Air ±8kV, Contact ±6kV				
MTBF	as per MIL-HDBK-217F, 25°C	3,500			K hours
RoHS	yes				

ENVIRONMENTAL

parameter	conditions/description	min	typ	max	units
operating temperature	see derating curve	-40		105	°C
storage temperature		-55		125	°C
storage humidity	non-condensing	5		95	%
vibration	10~150 Hz			5	G

DERATING CURVES

TEMPERATURE DERATING CURVE

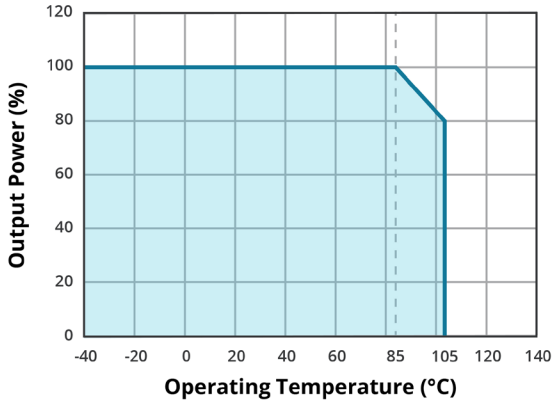

OUTPUT REGULATION CURVE
3.3 Vdc output model
(nominal input)

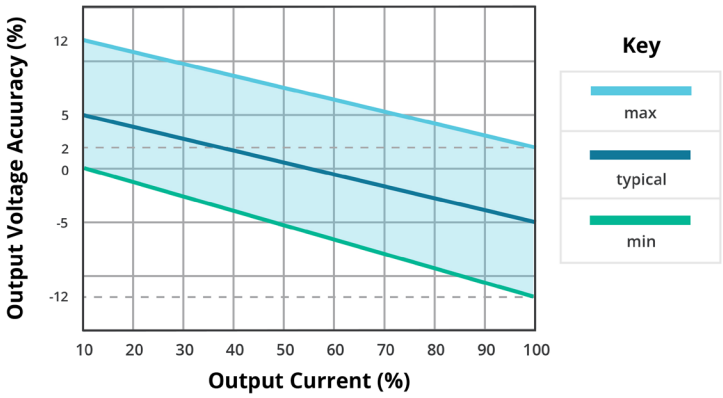

OUTPUT REGULATION CURVE
all other output models
(nominal input)

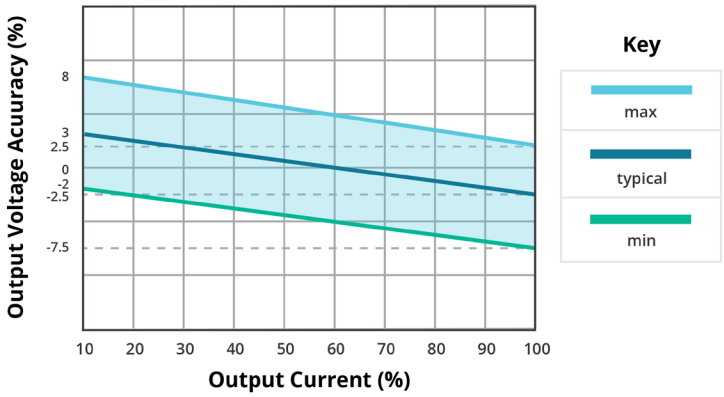

Downloaded from Arrow.com.

EFFICIENCY CURVES

EFFICIENCY VS INPUT VOLTAGE
PYSE1-S12-S5-D
(full load)

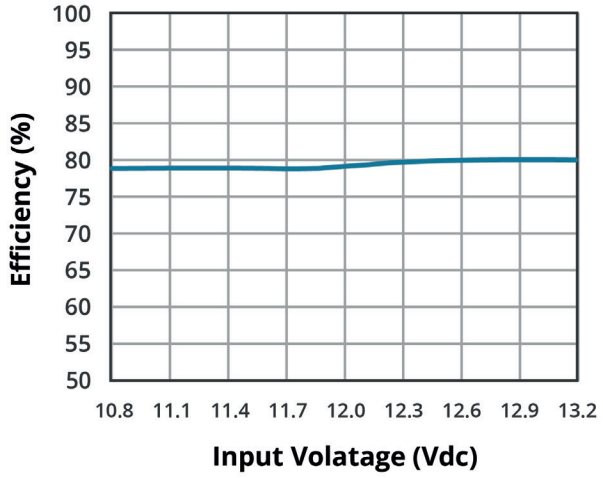

EFFICIENCY VS OUTPUT LOAD
PYSE1-S12-S5-D
(Vin = 12 Vdc)

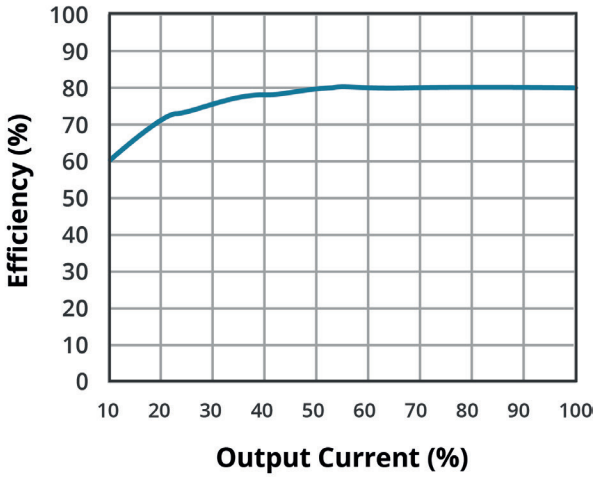

EFFICIENCY VS INPUT VOLTAGE
PYSE1-S24-S5-D
(full load)

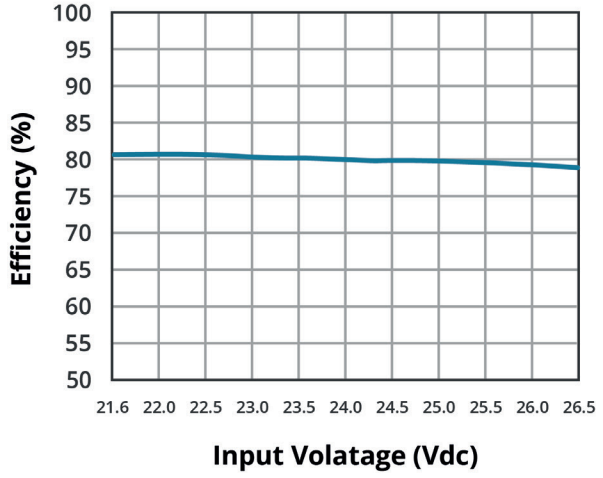

EFFICIENCY VS OUTPUT LOAD
PYSE1-S24-S5-D
(Vin = 24 Vdc)

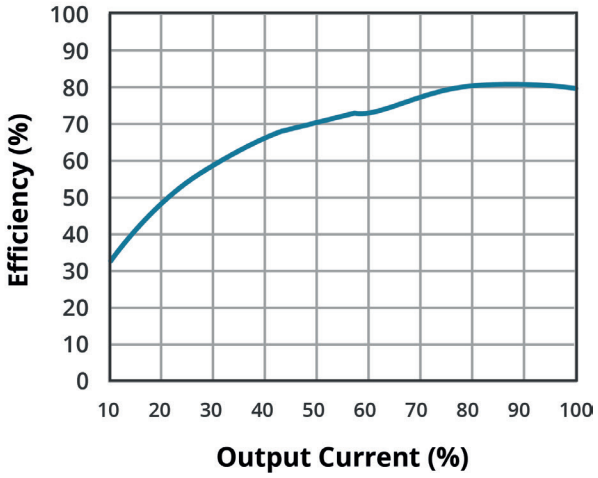

Downloaded from Arrow.com.

MECHANICAL

parameter	conditions/description	min	typ	max	units
dimensions	12.70 x 10.16 x 8.20 [0.5 x 0.4 x 0.322 inch]				mm
case material	black plastic, flame-retardant and heat-resistant (UL94 V-0)				
weight			1.8		g

MECHANICAL DRAWING

units: mm [inch]
tolerance: ±0.25 [±0.010]
pin diameter tolerance: ±0.10 [±0.004]

PIN Out	
PIN	Function
1	GND
4	Vin
5	+Vo
7	0V

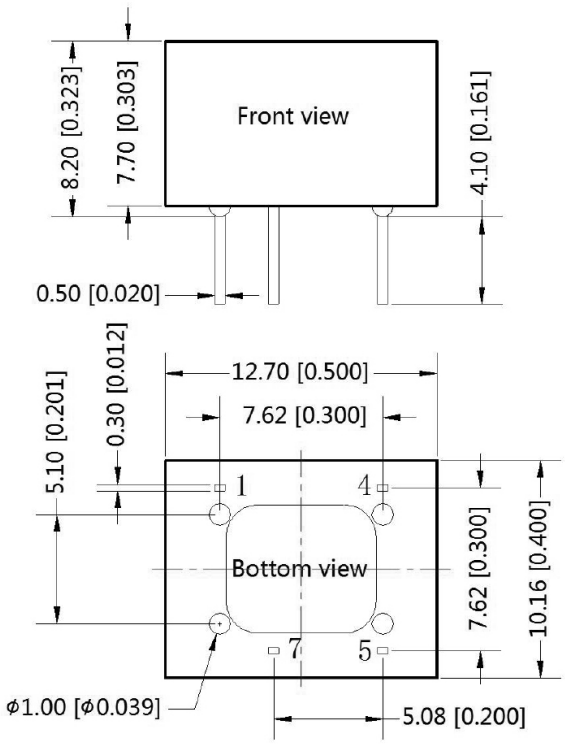

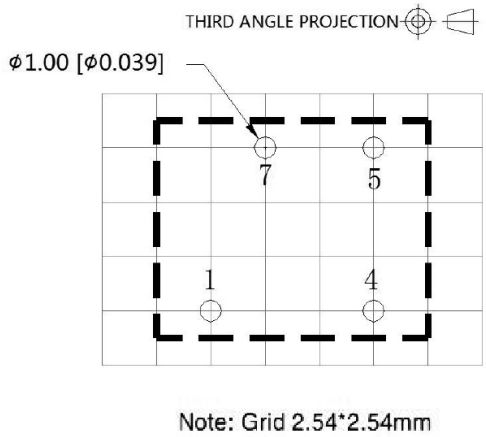

Downloaded from Arrow.com.

APPLICATION CIRCUIT

Input and/or output ripple can be further reduced by connecting a filter capacitor from the input and/or output terminals to ground as shown in Fig. 1.
Choosing suitable filter capacitor values is very important for a smooth operation of the modules, particularly to avoid start-up problems caused by capacitor values that are too high. For recommended input and output capacitor values refer to Table 1.

Figure 1

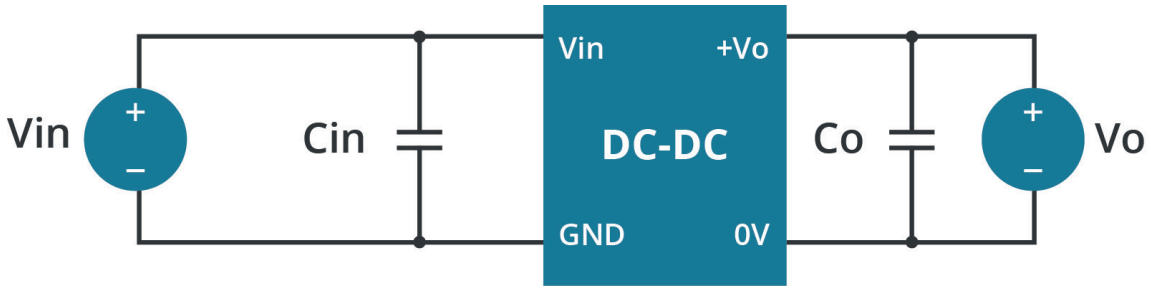

Table 1

Vin (Vdc)	Cin (µF/V)	Vo (Vdc)	Cout (µF/V)
12	2.2/25	3.3/5	10/16
15	2.2/25	9	4.7/25
24	1/50	12	2.2/25
-		15/24	1/50

EMC RECOMMENDED CIRCUIT

Figure 2

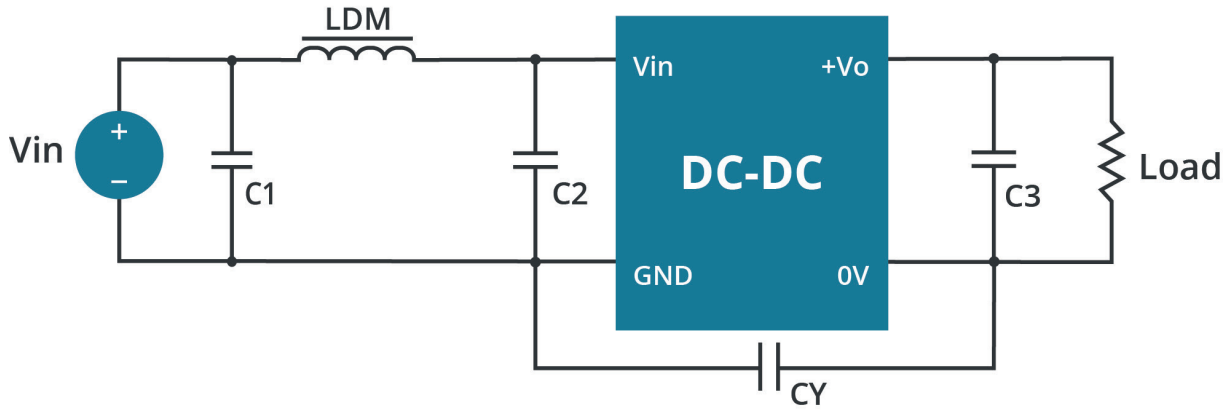

Table 2

Recommended External Circuit Components		
EMI	C1/C2	4.7µF/50V
	C3	Refer to the Co in Fig.1
	LDM	6.8µH
	CY	270pF/2kVdc

Downloaded from Arrow.com.

REVISION HISTORY

rev.	description	date
1.0	initial release	06/21/2021
1.01	CE certification updted	12/16/2022

The revision history provided is for informational purposes only and is believed to be accurate.

CUI INC
a bel group

Headquarters
20050 SW 112th Ave.
Tualatin, OR 97062
800.275.4899

Fax 503.612.2383
cui.com
techsupport@cui.com

CUI offers a two (2) year limited warranty. Complete warranty information is listed on our website.

CUI reserves the right to make changes to the product at any time without notice. Information provided by CUI is believed to be accurate and reliable. However, no responsibility is assumed by CUI for its use, nor for any infringements of patents or other rights of third parties which may result from its use.

CUI products are not authorized or warranted for use as critical components in equipment that requires an extremely high level of reliability. A critical component is any component of a life support device or system whose failure to perform can be reasonably expected to cause the failure of the life support device or system, or to affect its safety or effectiveness.

Downloaded from Arrow.com.