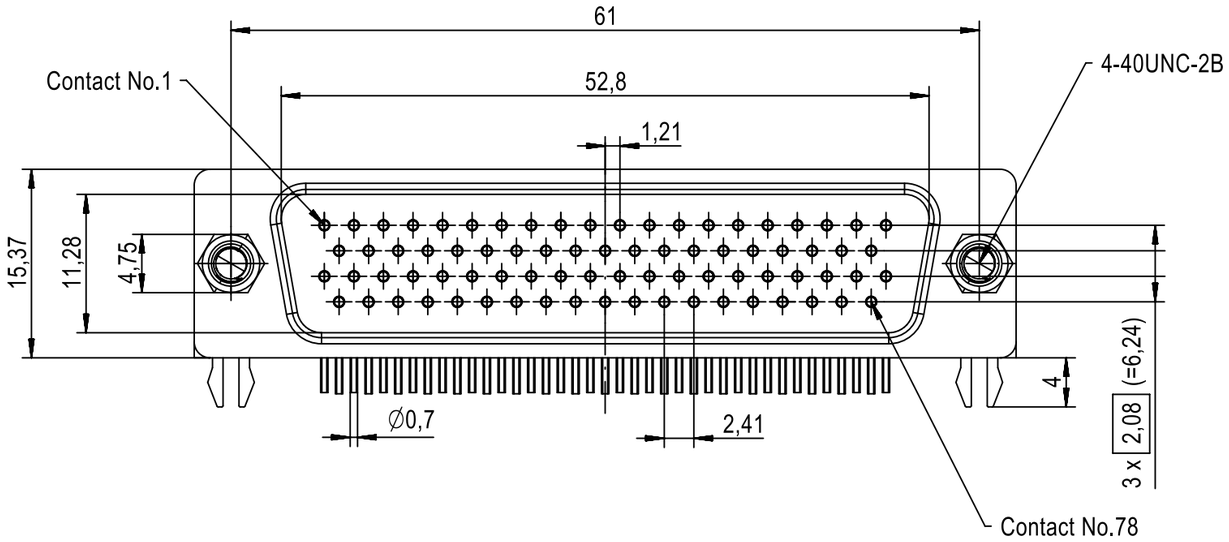

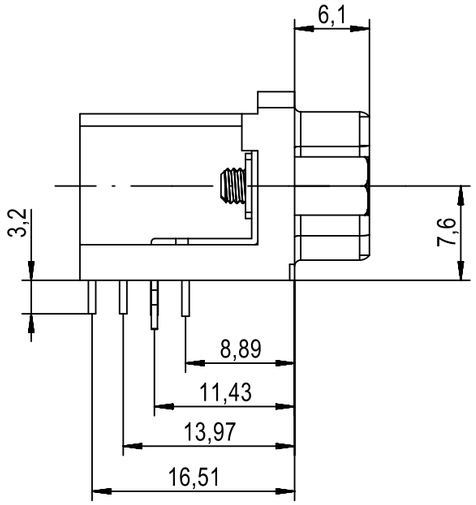

PC-Board layout
view component side
thickness 1,6 mm

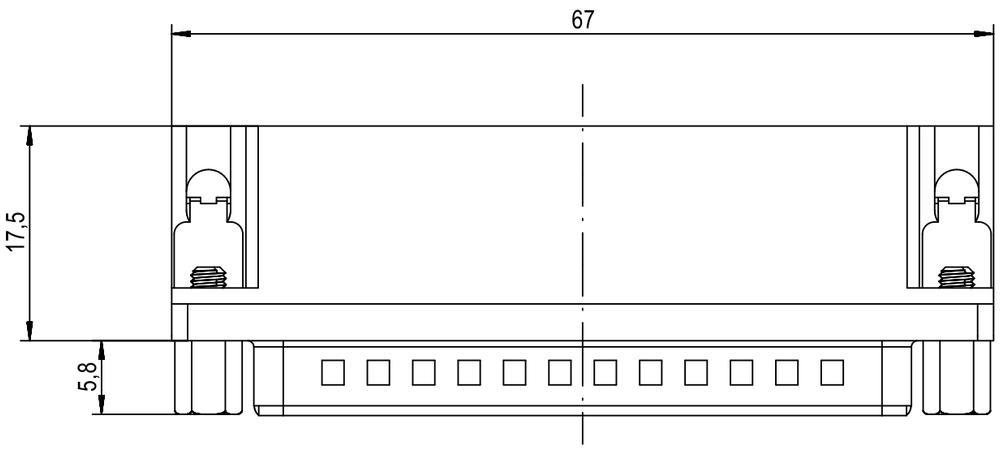

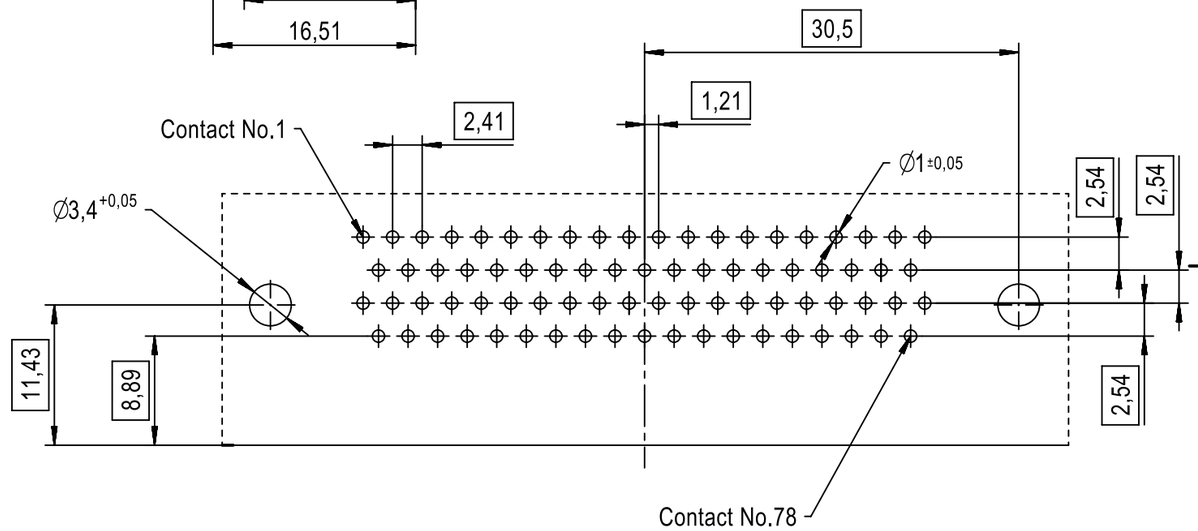

09565625813	S4
09565627813	PL3
Part number	Performance level

All Dimensions in mm
Original Size DIN A3

Scale 2:1 | Free size tol. | Ref. | Sub.

All rights reserved

Department EC PD - FR

HARTING Electronics GmbH
D-32339 Espelkamp

Created by	Inspected by	Standardisation	Date	State
DOUGE	BAGDIKIAN	HOFFMANN	2013-10-25	Final Release

Title: D-Sub HD 78P male angled screw locks

Doc-Key / ECM-Nr.: 100510360/UGD/001/D 500000065862

Type: TB | Number: 0956562X813 | Rev.: D | Page: 1/1

Downloaded from Arrow.com.

A3