E4MS036120U2

Automotive Silicon Carbide Power MOSFET

Features

- Industry compatible drive voltage 15 V ...18 V/-4 V ...0 V
- Low $R_{DS(on)}$ at high operating temperatures
- Improved device capacitance ratio (C_{iss}/C_{rss})
- Halogen free, RoHS compliant
- Automotive Qualified (AEC-Q101) and PPAP Capable

Benefits

- Higher efficiency with lower switching losses and EMI
- Faster switching operation enabling high power density
- Enables system level price performance optimization
- Reduction in system level cooling requirements

Typical Applications

- Onboard charger
- High voltage DC/DC converters
- HVAC compressors
- Battery management systems

Package

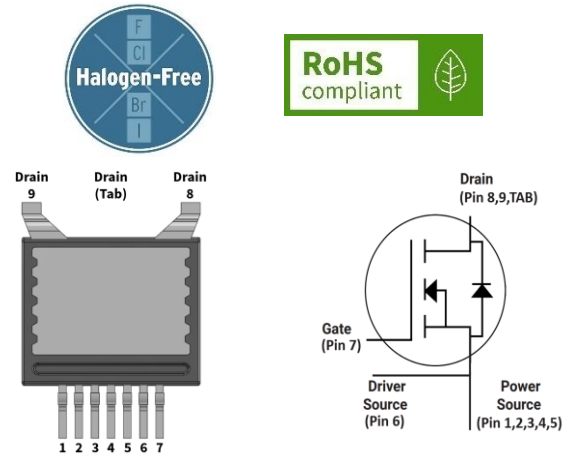

Orderable Part Number	Package Type	Marking
E4MS036120U2-TR	U2 (TSC)	E4MS036120U2

Absolute Maximum Ratings

Stress beyond those listed under absolute maximum ratings may damage the device.

Symbol	Parameter	Min.	Max.	Unit	Conditions	Note
$V_{DS(max)}$	Drain-Source Voltage		1200	V		
$V_{GS(max)}$	Maximum Gate – Source Voltage (Transient)	-10	23			Note 1
I_D	DC Continuous Drain Current		62	A	V_{GS} = 18 V, T_c = 25 °C, $T_J \leq$ 175 °C	Note 2
			44		V_{GS} = 18 V, T_c = 100 °C, $T_J \leq$ 175 °C	
I_{DM}	Pulsed Drain Current		193		V_{GS} = 18 V, T_c = 25 °C, t_{Pmax} limited by T_{jmax}	
P_D	Power Dissipation		272	W	T_c = 25 °C, T_J = 175 °C	Note 3
T_J, T_{stg}	Operating Junction and Storage Temperature	-55	+175	°C		
T_L	Solder Temperature		260		According to JEDEC J-STD-020	

Note (1): Refer to AN PRD-09634
Note (2): Current limit calculated by $I_{D(max)} = \sqrt{(P_D / R_{DS(typ)}(T_{J(max)}, I_{D(max)}))}$
Note (3): $P_D = (T_J - T_C) / R_{th(JC,Max)}$

© 2026 Wolfspeed, Inc. All rights reserved. Wolfspeed® and the Wolfstreak logo are registered trademarks and the Wolfspeed logo is a trademark of Wolfspeed, Inc.
The information in this document is subject to change without notice.
Downloaded from Arrow.com.

Electrical Characteristics (T_C = 25 °C unless otherwise specified)

Symbol	Parameter	Min.	Typ.	Max.	Unit	Test Conditions	Note
$V_{(BR)DSS}$	Drain – Source Breakdown Voltage	1200			V	V_{GS} = 0 V, I_D =100 µA	
$V_{GS(th)}$	Gate Threshold Voltage	2.0	2.6	3.9	V	V_{DS} = V_{GS}, I_D = 7.6 mA	Fig. 11, Note 1
			2.0		V	V_{DS} = V_{GS}, I_D = 7.6 mA, T_J = 175 °C	
I_{DSS}	Zero Gate Voltage Drain Current		1	50	µA	V_{DS} = 1200 V, V_{GS} = 0 V	
I_{GSS}	Gate-Source Leakage Current		10	250	nA	V_{GS} = 18 V, V_{DS} = 0 V	
$V_{GS(op)}$	Recommended Turn on Gate-Source Voltage		15…18		V		Note 4
	Recommended Turn off Gate-Source Voltage		-4…0				
$R_{DS(on)}$	Drain-Source On-State Resistance		36	47	mΩ	V_{GS} = 18 V, I_D = 27.6 A	Fig. 4, 5, 6
			68			V_{GS} = 18 V, I_D = 27.6 A, T_J = 175 °C	
			41			V_{GS} = 15 V, I_D = 27.6 A	
g_{fs}	Transconductance		20		S	V_{DS} = 20 V, I_D = 27.6 A	Fig. 7
			19			V_{DS} = 20 V, I_D = 27.6 A, T_J = 175 °C	
$R_{DS(on)Tempco}$	On Resistance Temperature Coefficient		1.88			V_{GS} = 18 V, I_D = 27.6 A	Note 5
C_{iss}	Input Capacitance		2164		pF	V_{GS} = 0 V, V_{DS} = 1000 V f = 100 kHz V_{AC} = 25 mV	Fig. 17, 18
C_{oss}	Output Capacitance		72				
C_{rss}	Reverse Transfer Capacitance		3.4				
C_{iss}/C_{rss}	Capacitance Ratio		630				Note 6
E_{oss}	C_{OSS} Stored Energy		46		µJ		Fig. 16
$C_{o(er)}$	Effective Output Capacitance (Energy Related)		106		pF	V_{GS} = 0 V, V_{DS} = 0 V … 800 V	Note 7
$C_{o(tr)}$	Effective Output Capacitance (Time Related)		173				
E_{on}	Turn-On Switching Energy (Body Diode FWD) T_j = 25 °C T_j = 175 °C		303 393		µJ	V_{DS} = 800 V, V_{GS} = -4 V / 18 V, I_D = 27.6 A, $R_{G(ext)}$ = 2 Ω, L_σ = 25 nH	Fig. 25, 27, 29
E_{off}	Turn-Off Switching Energy (Body Diode FWD) T_j = 25 °C T_j = 175 °C		18 26				Fig. 25, 28, 29
$t_{d(on)}$	Turn-On Delay Time		12		ns	V_{DS} = 800 V, V_{GS} =-4 V / 18 V, I_D = 27.6 A, $R_{G(ext)}$ = 2 Ω, L_σ = 25 nH Timing relative to I_{DS} Inductive load	Fig. 26, 27, 29
t_r	Rise Time		3				
$t_{d(off)}$	Turn-Off Delay Time		29				Fig. 26, 28, 29
t_f	Fall Time		4				
$R_{G(int)}$	Internal Gate Resistance		2.4		Ω	f = 1 MHz	
Q_{gs}	Gate to Source Charge		24		nC	V_{DS} = 800 V, V_{GS} = -4 V/ 18 V I_D = 27.6 A	Fig. 12
Q_{gd}	Gate to Drain Charge		23				
Q_g	Total Gate Charge		88				

Note (4): Refer to AN PRD-08999.
Note (5): $R_{DS(on)Tempco}$ refers to $R_{DS(on)}$ at 175 °C / $R_{DS(on)}$ at 25 °C. This is a E4MS 1200 V product family value.
Note (6): Capacitance ratio is a FOM for partial turn-on immunity AN PRD-06933. This is a E4MS 1200 V product family value.
Note (7): $C_{o(er)}$, a lumped capacitance that gives the same stored energy as C_{oss} while V_{DS} is rising from 0 V to 800 V.
$C_{o(tr)}$, a lumped capacitance that gives the same charging time as C_{oss} while V_{DS} is rising from 0 V to 800 V.

© 2026 Wolfspeed, Inc. All rights reserved. Wolfspeed® and the Wolfstreak logo are registered trademarks and the Wolfspeed logo is a trademark of Wolfspeed, Inc.
The information in this document is subject to change without notice.
Downloaded from Arrow.com.

Reverse Diode Characteristics (T_C = 25 °C unless otherwise specified)

Symbol	Parameter	Typ.	Max.	Unit	Test Conditions	Note
V_{SD}	Diode Forward Voltage	5.1		V	V_{GS} = -4 V, I_{SD} = 13.8 A, T_J = 25 °C	Fig. 8, 9, 10
		4.5			V_{GS} = -4 V, I_{SD} = 13.8 A, T_J = 175 °C	
I_S	Continuous Diode Forward Current		40	A	V_{GS} = -4 V, T_C = 25 °C	
I_{SM}	Diode Pulse Current		193		V_{GS} = -4 V, pulse width t_p limited by T_{jmax}	
t_{rr}	Reverse Recovery Time	11		ns	V_{GS} = -4 V, I_{SD} = 27.6 A, V_R = 800 V, T_J = 175 °C, di_f/dt = 7.6 A/ns	Fig. 30
Q_{rr}	Reverse Recovery Charge	335		nC		
I_{RRM}	Peak Reverse Recovery Current	49		A		
E_{RR}	Reverse Recovery Energy T_j = 25 °C T_j = 175 °C	 29 35		µJ	V_{DS} = 800 V, I_{DS} = 27.6 A, V_{GS} = -4 V / 18 V, $R_{G(ext)}$ = 2 Ω, L_σ = 25 nH	

Thermal Characteristics

Symbol	Parameter	Typ.	Max.	Unit	Test Conditions	Note
$R_{\theta JC}$	Thermal Resistance from Junction to Case	0.42	0.55	°C/W		

© 2026 Wolfspeed, Inc. All rights reserved. Wolfspeed® and the Wolfstreak logo are registered trademarks and the Wolfspeed logo is a trademark of Wolfspeed, Inc.
The information in this document is subject to change without notice.
Downloaded from Arrow.com.

Typical Performance

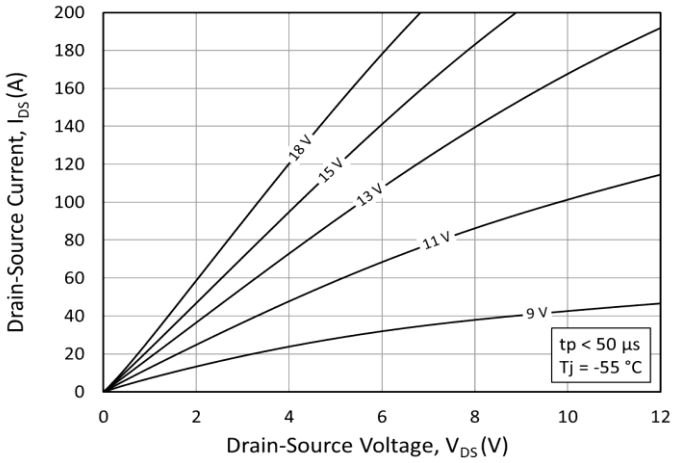

Figure 1. Output Characteristics T_{VJ} = -55 °C

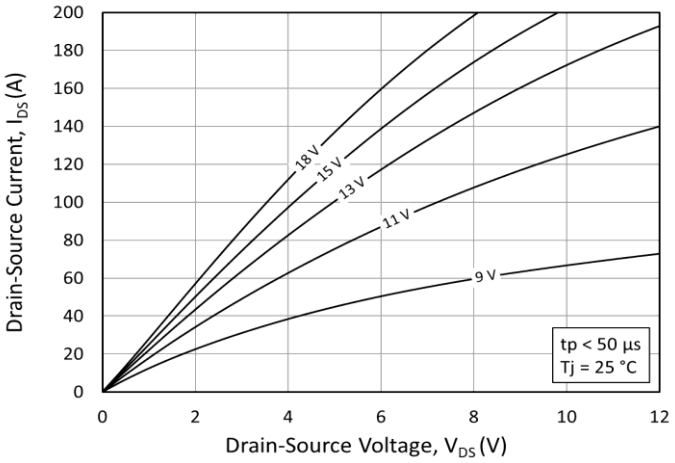

Figure 2. Output Characteristics T_{VJ} = 25 °C

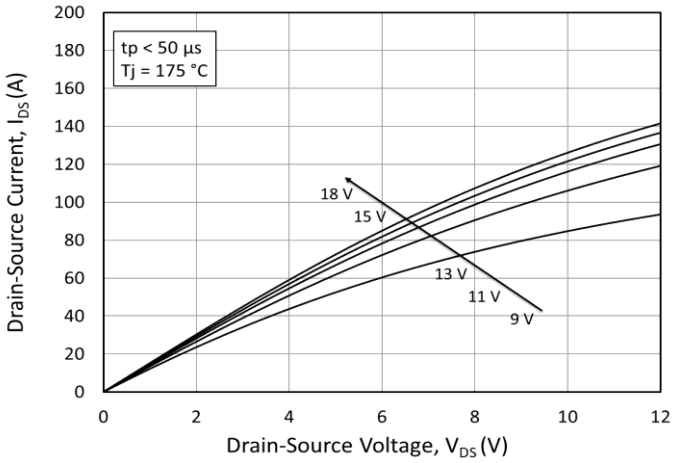

Figure 3. Output Characteristics T_{VJ} = 175 °C

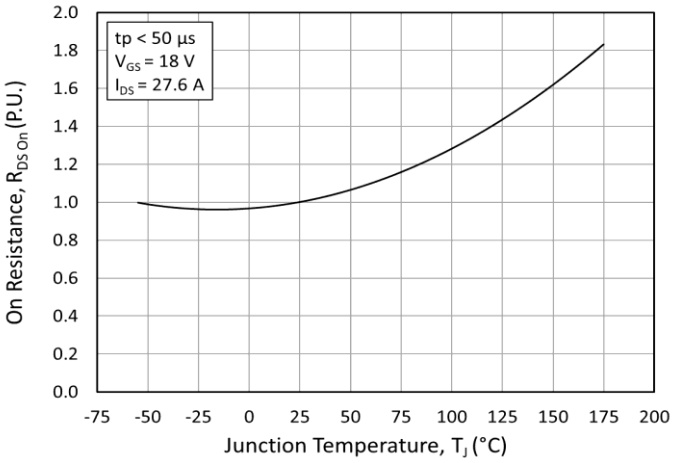

Figure 4. Normalized On-Resistance vs. Temperature

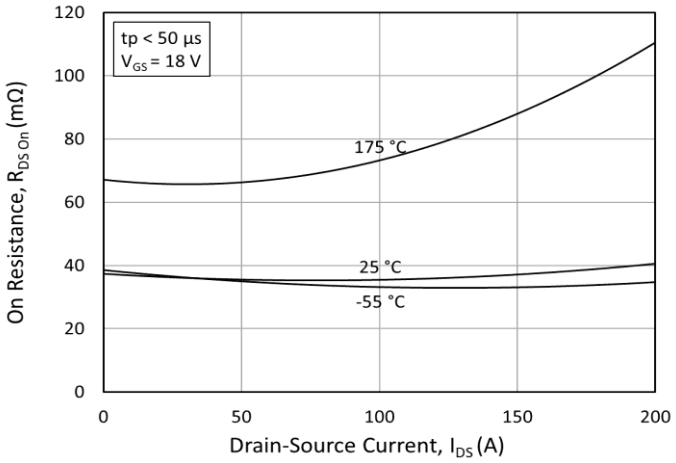

Figure 5. On-Resistance vs. Drain Current for Various Temperatures

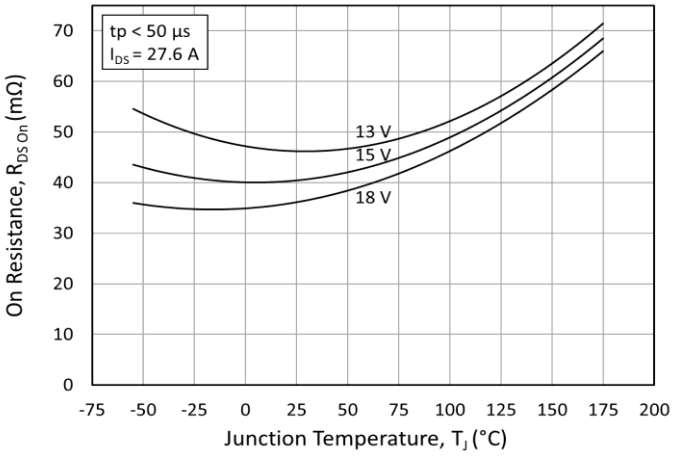

Figure 6. On-Resistance vs. Temperature for Various Gate Voltages

© 2026 Wolfspeed, Inc. All rights reserved. Wolfspeed® and the Wolfstreak logo are registered trademarks and the Wolfspeed logo is a trademark of Wolfspeed, Inc.
The information in this document is subject to change without notice.
Downloaded from Arrow.com.

Typical Performance

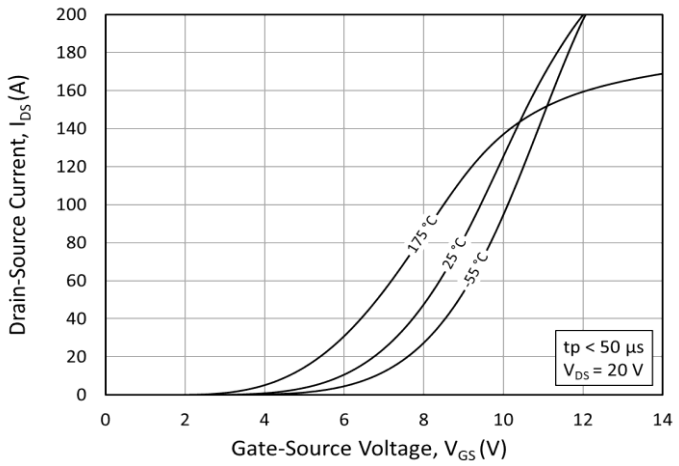

Figure 7. Transfer Characteristic for Various Junction Temperatures

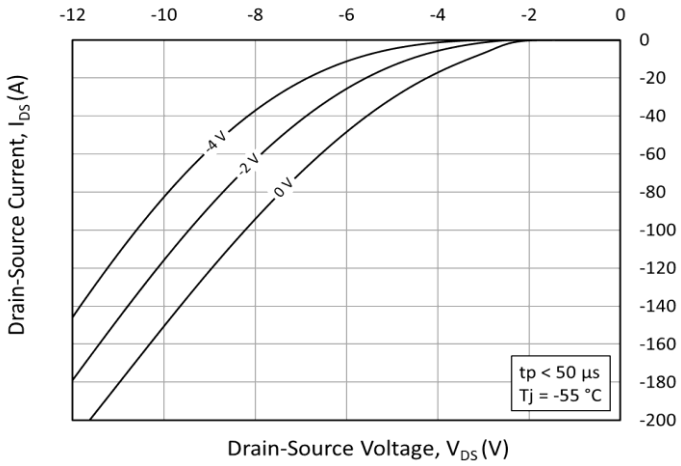

Figure 8. Body Diode Characteristic at T_{VJ} = -55 °C

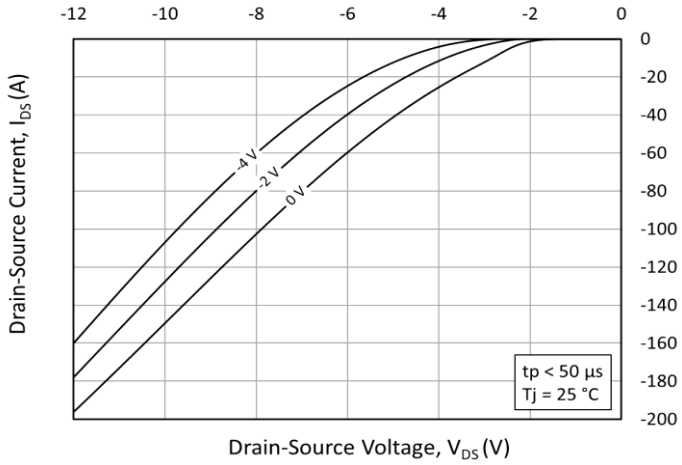

Figure 9. Body Diode Characteristic at T_{VJ} = 25 °C

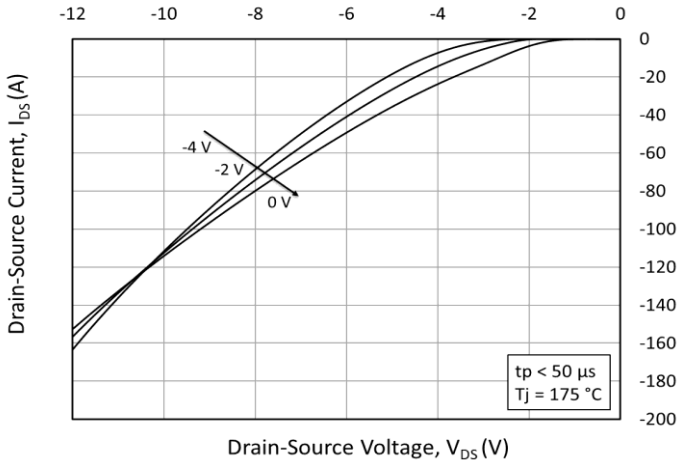

Figure 10. Body Diode Characteristic at T_{VJ} = 175 °C

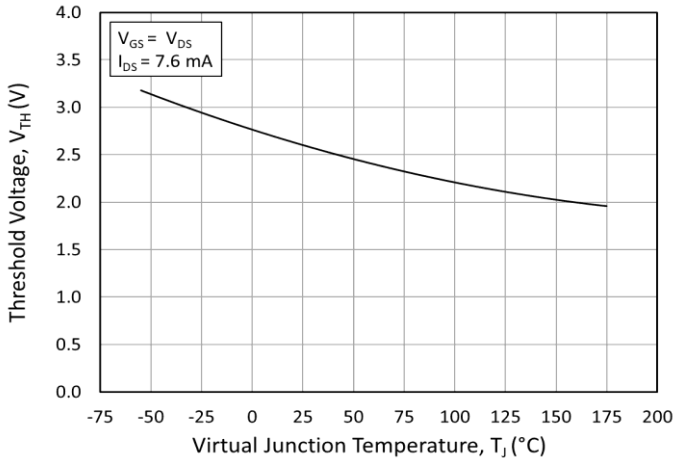

Figure 11. Threshold Voltage vs. Temperature

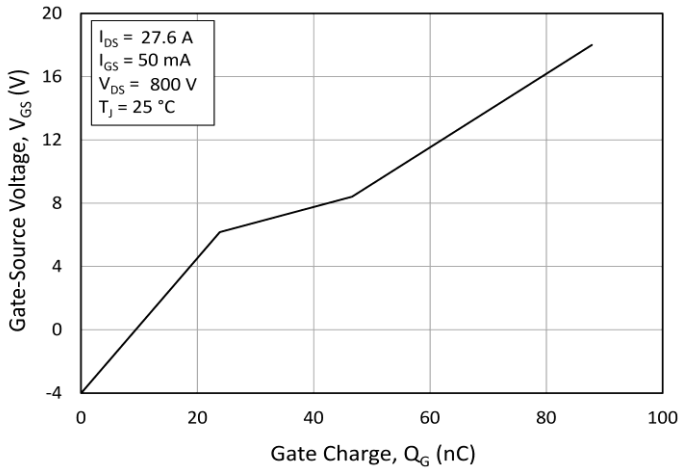

Figure 12. Gate Charge Characteristics

© 2026 Wolfspeed, Inc. All rights reserved. Wolfspeed® and the Wolfstreak logo are registered trademarks and the Wolfspeed logo is a trademark of Wolfspeed, Inc.
The information in this document is subject to change without notice.
Downloaded from Arrow.com.

Typical Performance

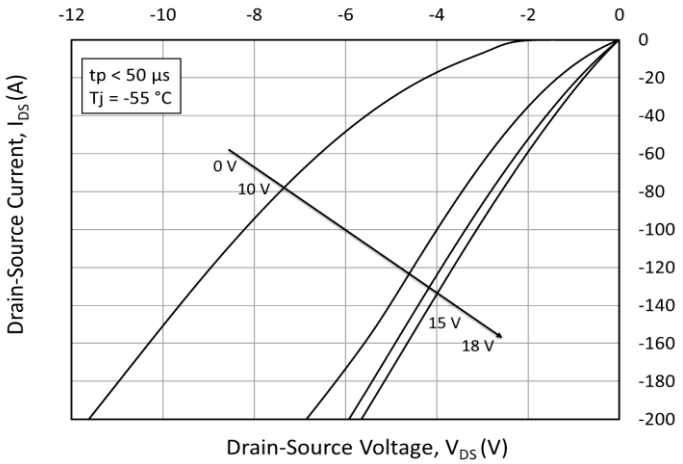

Figure 13. 3rd Quadrant Characteristic at T_{VJ} = -55 °C

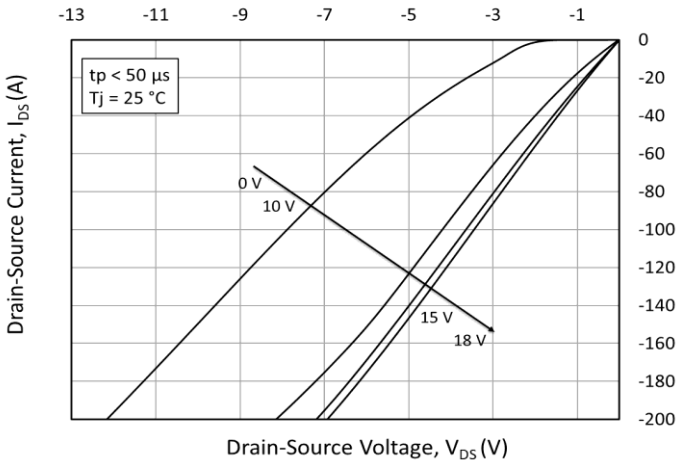

Figure 14. 3rd Quadrant Characteristic at T_{VJ} = 25 °C

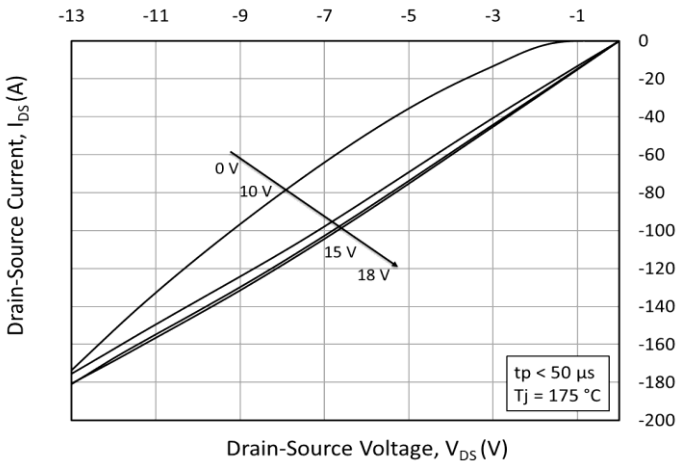

Figure 15. 3rd Quadrant Characteristic at T_{VJ} = 175 °C

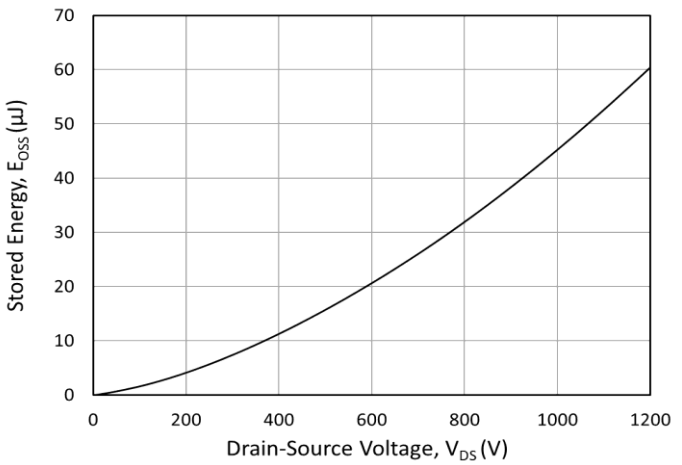

Figure 16. Output Capacitor Stored Energy

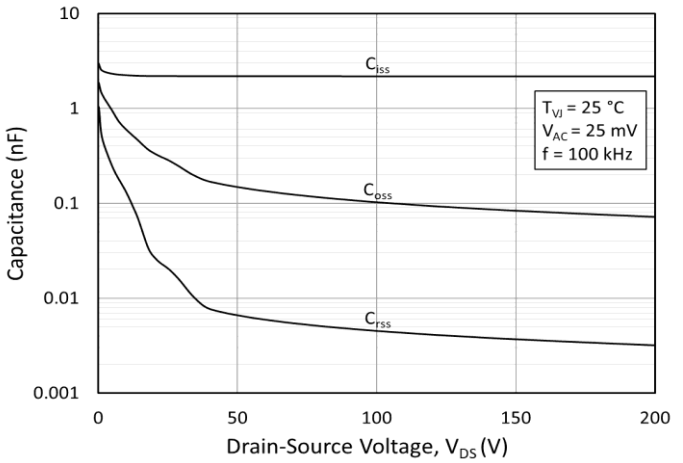

Figure 17. Capacitances vs. Drain-Source Voltage (0-200 V)

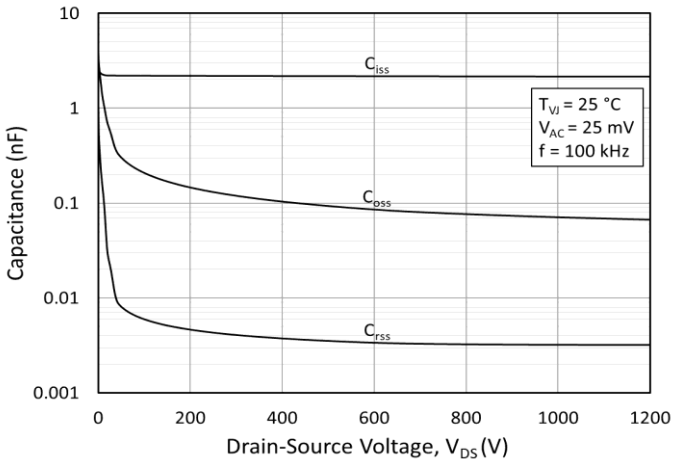

Figure 18. Capacitances vs. Drain-Source Voltage (0-1200 V)

© 2026 Wolfspeed, Inc. All rights reserved. Wolfspeed® and the Wolfstreak logo are registered trademarks and the Wolfspeed logo is a trademark of Wolfspeed, Inc.
The information in this document is subject to change without notice.
Downloaded from Arrow.com.

Typical Performance

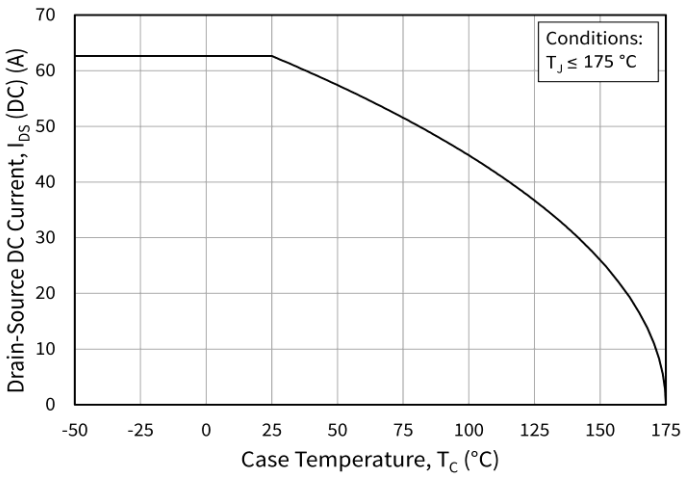

Figure 19. Continuous Drain Current Derating vs. Case Temperature

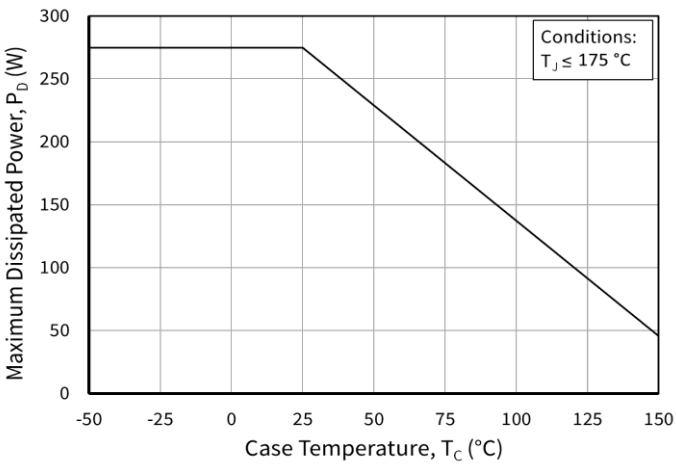

Figure 20. Maximum Power Dissipation Derating vs. Case Temperature

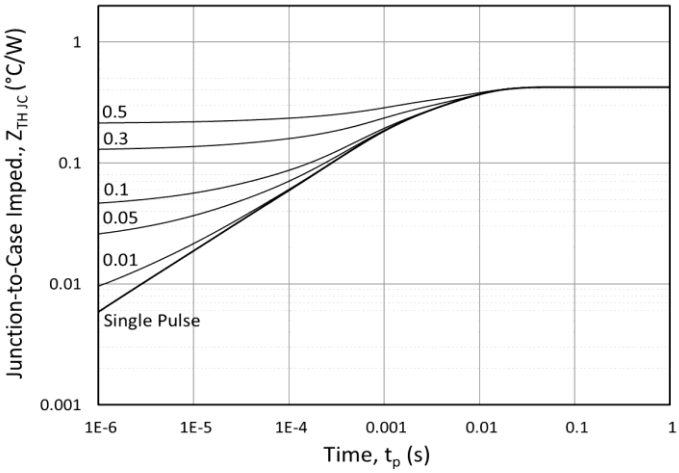

Figure 21. Transient Thermal Impedance (Junction - Case) °C

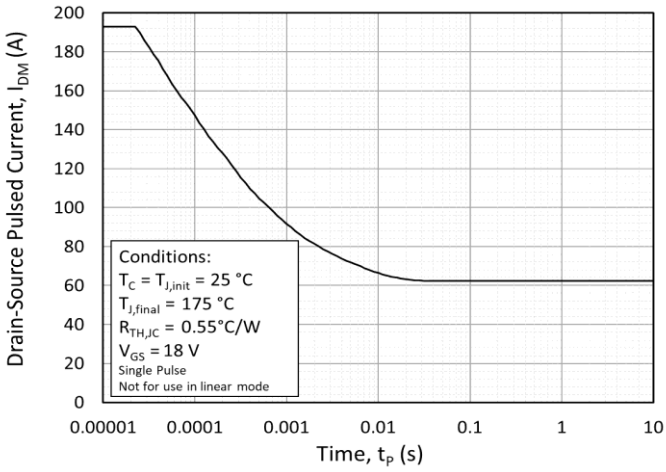

Figure 22. Safe Operating Area

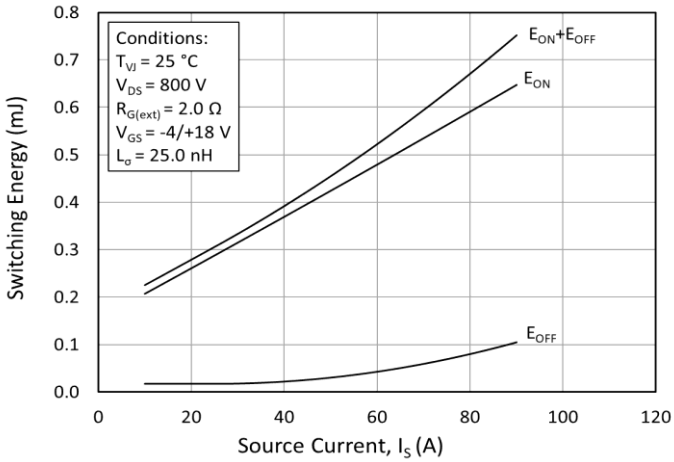

Figure 23. Clamped Inductive Switching Energy vs. Drain Current (V_{DD} = 800 V)

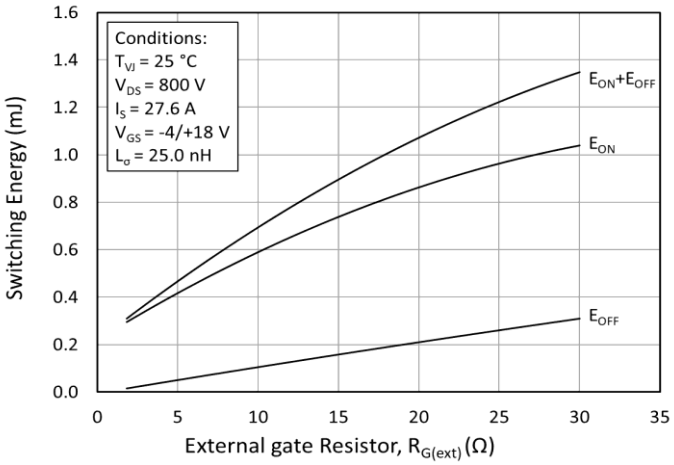

Figure 24. Clamped Inductive Switching Energy vs. $R_{G(ext)}$

© 2026 Wolfspeed, Inc. All rights reserved. Wolfspeed® and the Wolfstreak logo are registered trademarks and the Wolfspeed logo is a trademark of Wolfspeed, Inc.
The information in this document is subject to change without notice.
Downloaded from Arrow.com.

Typical Performance

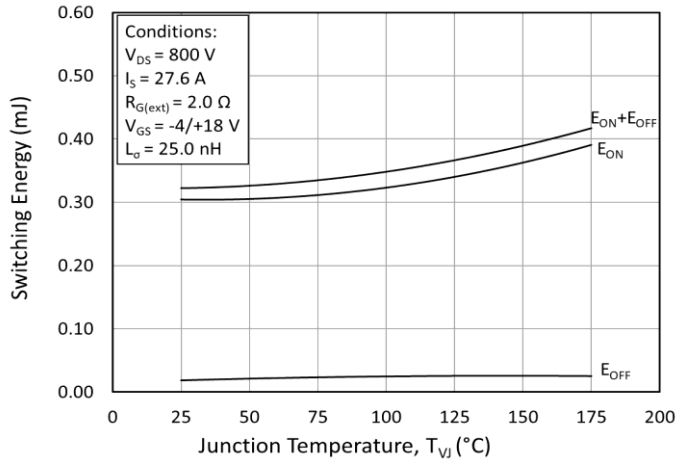

Figure 25. Clamped Inductive Switching Energy vs. Temperature

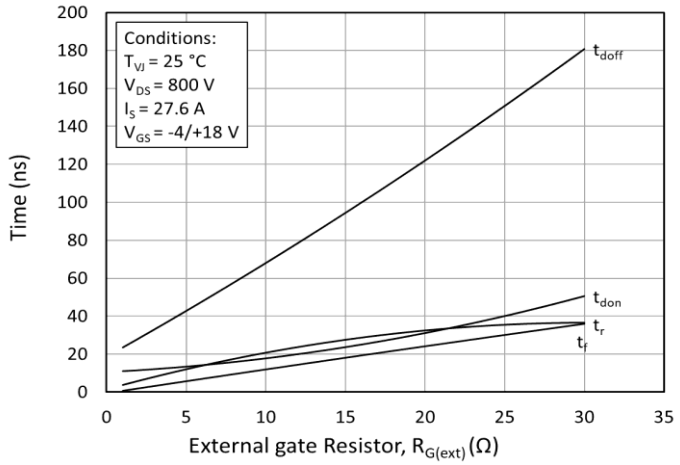

Figure 26. Switching Times vs. $R_{G(ext)}$

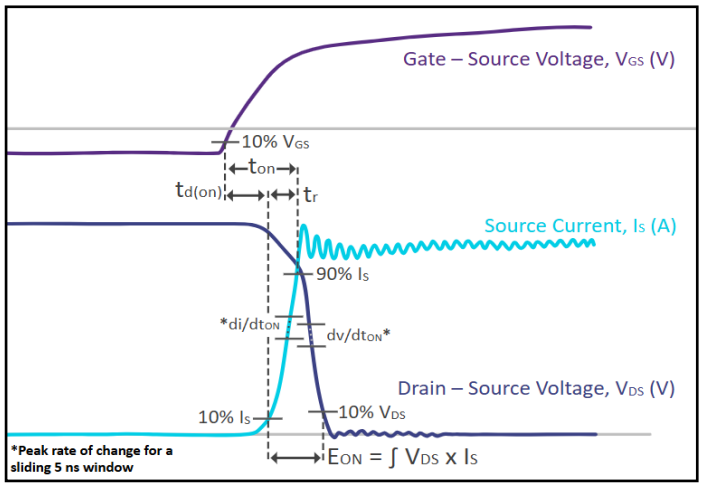

Figure 27. Turn On Switching Time Definition

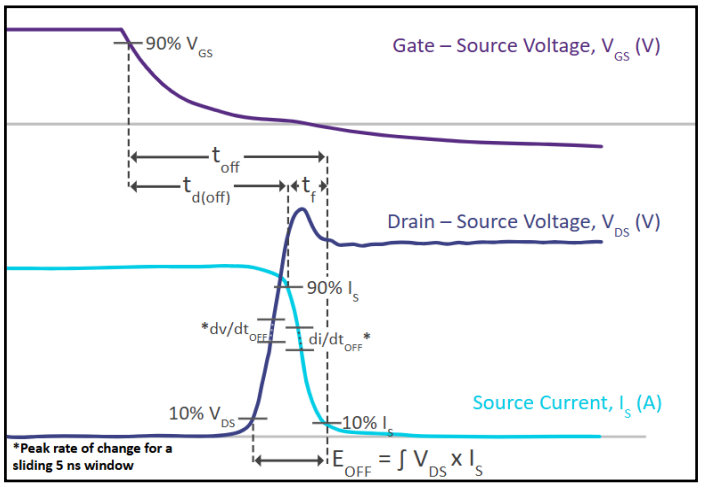

Figure 28. Turn Off Switching Time Definition

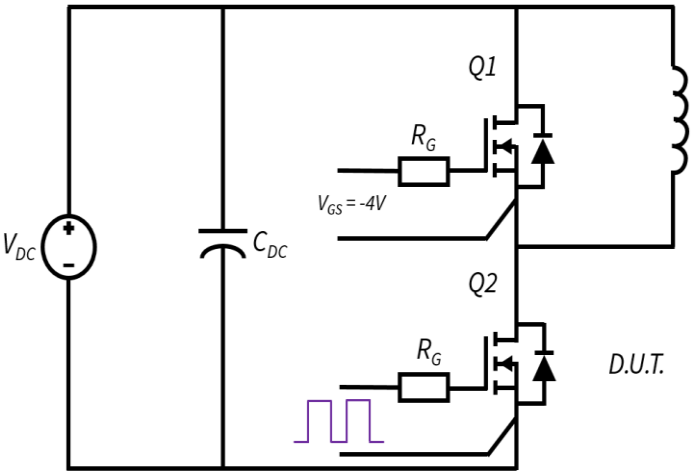

Figure 29. Clamped Inductive MOSFET Switching Waveform Test Circuit

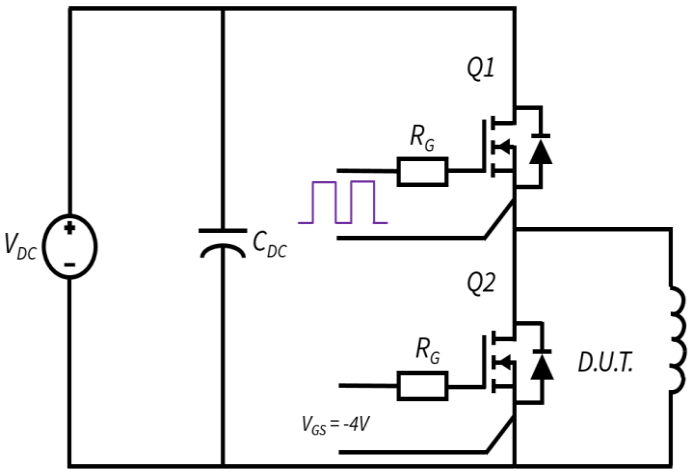

Figure 30. Clamped Inductive Body Diode Switching Waveform Test Circuit

© 2026 Wolfspeed, Inc. All rights reserved. Wolfspeed® and the Wolfstreak logo are registered trademarks and the Wolfspeed logo is a trademark of Wolfspeed, Inc.
The information in this document is subject to change without notice.
Downloaded from Arrow.com.

Package Dimensions

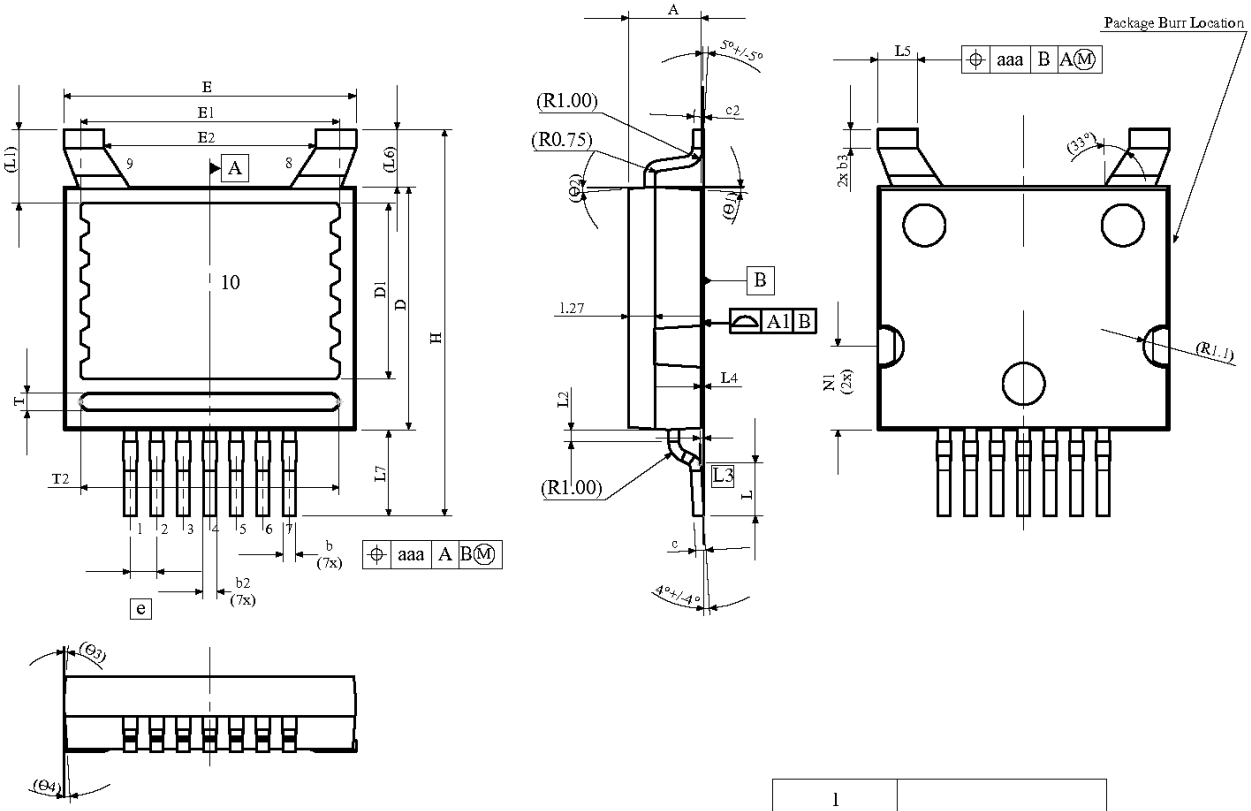

SYMBOL	MIN (mm)	MAX (mm)
A	3.40	3.60
A1	---	0.05
b	0.50	0.70
b2	0.50	1.00
b3	0.85	1.05
c	0.40	0.60
c2	0.40	0.60
D	11.55	11.75
D1	8.30	8.50
E	13.92	14.12
E1	12.22	12.42
E2	9.92	10.22
e	BSC 1.27	
H	18.00	19.00
L	2.47	2.67
L1	BSC 3.51	
L2	0.3	0.73
L3	BSC 0.26	
L4	0.09	0.2
L5	1.83	2.13
L6	BSC 2.75	
L7	4.03	4.23
T	0.75	0.95
T2	12.30	12.50
N1	3.90	4.10
θ1	0°	8°
θ2	0°	8°
θ3	0°	8°
θ4	0°	8°
aaa	---	0.10

1	SOURCE
2	
3	
4	
5	
6	DRIVER SOURCE
7	GATE
8	DRAIN
9	DRAIN
10	DRAIN

NOTE
1. ALL METAL SURFACES ARE TIN PLATED (MATTE), EXCEPT AREA OF CUT.
2. DIMENSIONING & TOLERANCING CONFORM TO ASME Y14.5M-1994.
3. ALL DIMENSIONS ARE LISTED IN MILLIMETERS. ANGLES ARE IN DEGREES.
4. PACKAGE BURR FLASH SIZE (0.5 mm) IS NOT INCLUDED IN THE DIMENSIONS

© 2026 Wolfspeed, Inc. All rights reserved. Wolfspeed® and the Wolfstreak logo are registered trademarks and the Wolfspeed logo is a trademark of Wolfspeed, Inc.
The information in this document is subject to change without notice.
Downloaded from Arrow.com.

Recommended Solder Pad Layout

All dimensions in mm

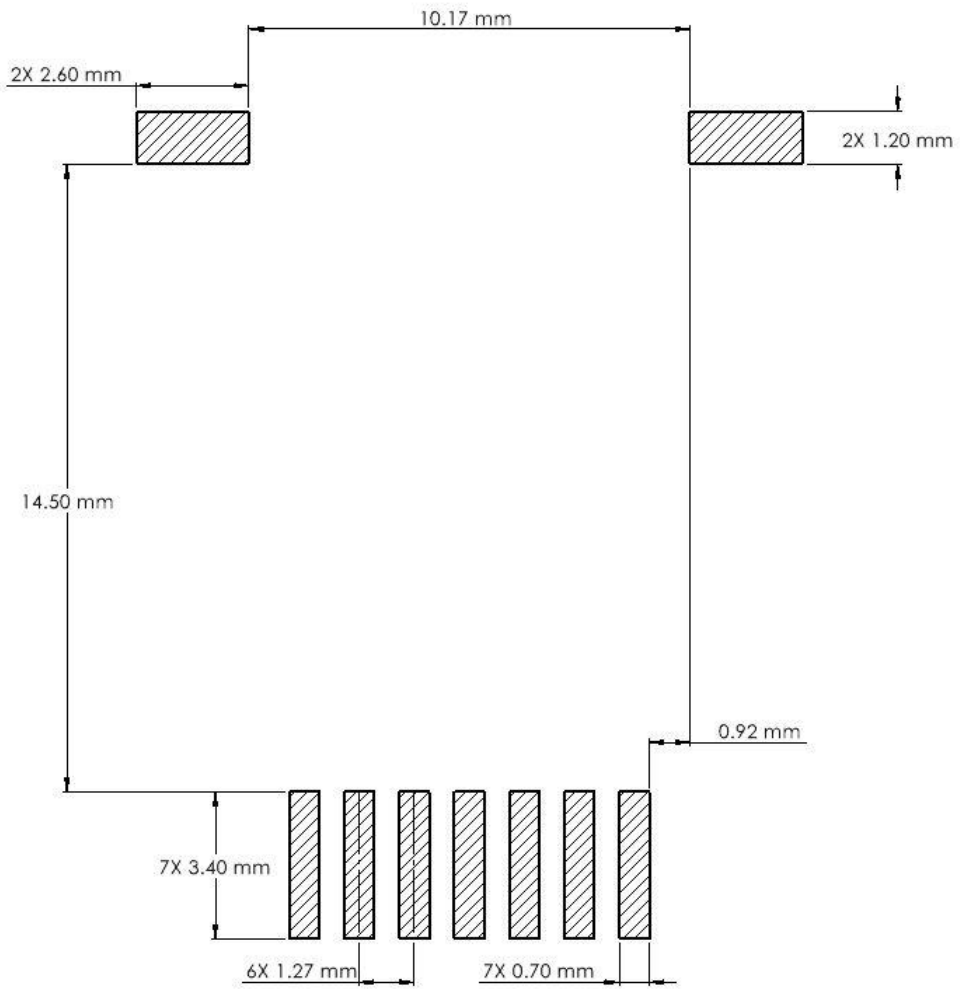

© 2026 Wolfspeed, Inc. All rights reserved. Wolfspeed® and the Wolfstreak logo are registered trademarks and the Wolfspeed logo is a trademark of Wolfspeed, Inc.
The information in this document is subject to change without notice.
Downloaded from Arrow.com.

Revision History

Documents Version	Date of Change	Description of Changes
1	November 2025	Initial Release
2	January 2026	Addition of Note (1)
3	March 2026	Corrected the labels on Figures 8 and 9
4	8/5/2026	• Updated the datasheet template and reformatted figures • Corrected the typical values of the following parameters: ○ Recommended Turn off Gate-Source Voltage ○ $R_{DS(on)}$ at T_J = 175 °C ○ $R_{DS(on)}$ at V_{GS} = 15 V ○ C_{rss} ○ V_{SD} at T_J = 25 °C ○ V_{SD} at T_J = 175 °C ○ I_D at T_C = 25 °C ○ P_D at T_C = 25 °C

Appendix

Appendix Number	Description
A1	The following are recommendations for turning off the MOSFET with 0 V: • Measure the V_{GS} spike accurately using high-CMRR probes and low common mode noise measurements. • For the safe operation of the device, the voltage spike shall remain < 5 V for a time duration of < 40 ns.

© 2026 Wolfspeed, Inc. All rights reserved. Wolfspeed® and the Wolfstreak logo are registered trademarks and the Wolfspeed logo is a trademark of Wolfspeed, Inc.
The information in this document is subject to change without notice.
Downloaded from Arrow.com.

Notes & Disclaimers

This document and the information contained herein are subject to change without notice. Any such change shall be evidenced by the publication of an updated version of this document by Wolfspeed. No communication from any employee or agent of Wolfspeed or any third party shall effect an amendment or modification of this document. No responsibility is assumed by Wolfspeed for any infringement of patents or other rights of third parties which may result from use of the information contained herein. No license is granted by implication or otherwise under any patent or patent rights of Wolfspeed.

Notwithstanding any application-specific information, guidance, assistance, or support that Wolfspeed may provide, the buyer of this product is solely responsible for determining the suitability of this product for the buyer's purposes, including without limitation for use in the applications identified in the next bullet point, and for the compliance of the buyers' products, including those that incorporate this product, with all applicable legal, regulatory, and safety-related requirements.

This product has not been designed or tested for use in, and is not intended for use in, applications in which failure of the product would reasonably be expected to cause death, personal injury, or property damage, including but not limited to equipment implanted into the human body, life-support machines, cardiac defibrillators, and similar emergency medical equipment, aircraft navigation, communication, and control systems, aircraft power and propulsion systems, air traffic control systems, and equipment used in the planning, construction, maintenance, or operation of nuclear facilities.

RoHS Compliance
The levels of RoHS restricted materials in this product are below the maximum concentration values (also referred to as the threshold limits) permitted for such substances, or are used in an exempted application, in accordance with EU Directive 2011/65/EC (RoHS2), as implemented January 2, 2013. RoHS Declarations for this product can be obtained from your Wolfspeed representative or from the Product Documentation sections of www.wolfspeed.com.

REACh Compliance
REACh substances of high concern (SVHCs) information is available for this product. Since the European Chemical Agency (ECHA) has published notice of their intent to frequently revise the SVHC listing for the foreseeable future, please contact your Wolfspeed representative to ensure you get the most up-to-date REACh SVHC Declaration. REACh banned substance information (REACh Article 67) is also available upon request.

Contact info

4600 Silicon Drive
Durham, North Carolina, USA 27703
http://www.wolfspeed.com/Power

© 2026 Wolfspeed, Inc. All rights reserved. Wolfspeed®, the Wolfspeed logo, the Wolfstreak logo, WolfPACK®, Wolfspeed WolfPACK®, and the Wolfspeed WolfPACK logo are registered trademarks of Wolfspeed, Inc. The information in this document is subject to change without notice.

PATENT: https://www.wolfspeed.com/legal/patents

The information in this document is subject to change without notice.

© 2026 Wolfspeed, Inc. All rights reserved. Wolfspeed® and the Wolfstreak logo are registered trademarks and the Wolfspeed logo is a trademark of Wolfspeed, Inc.
The information in this document is subject to change without notice.
Downloaded from Arrow.com.