ITT Part Number Search

Enter Part Number: Go

PART NUMBER:051-047-0000220

Product Family	RF
Product Group	RF - SMB
Market Application	Industrial, Telecom
Component Type	Bulkhead Jacks
Gender	Receptacle
Mounting Style	90° Bulkhead
Engagement (Insertion) Force	Initial = 62 N (14 lbs.) maximum engagement.
Packaging Type	Each
Plating	Center contact: Gold. Other metal parts: Gold to meet the finish and corrosion requirements of MIL-C-39012.
Product Description	90° Bulkhead Jack, Solder Pot, Mounting Nut Inside Panel
Cable Retention	When properly assembled to the compatible braided coaxial cable, the retention is equal to the breaking strength of the cable.
Connector Durability	500 mating cycles minimum
Contact Current Rating	1.5 A DC maximum
Corrosion (salt spray)	MIL-STD-202, Method 101, test condition B, 5% salt solution
Insertion Loss	0.25 dB maximum @ 4 GHz
Insulation Resistance	1000 M ohms minimum
Locknut Torque	0.56 to 0.64 Nm (80 to 90 in. oz.)
Moisture Resistance	MIL-STD-202. Method 106, when interface gasket is used. No measurement at high humidity. Insulation resistance shall be 200 M ohms minimum within five minutes after removal from humidity.
RF Leakage	-55 dB minimum @ 2-3 GHz
Shock	MIL-STD-202, Method 213, Test Condition B, 75 G`s at 6 milliseconds 1/2 sine.
Temperature Rating	-65°C to 165°C
Thermal Shock	MIL-STD-202, Method 107, Test Condition B, except high temperature shall be 85°C. High temperature shall be 200°C for connectors using 200°C cables.
Vibration, High Frequency	MIL-STD-202, Method 204, Test Condition B (15 G`s)
Impedance	50 ohms
Frequency Range 1	0 to 4.0 GHz
Contact Resistance	Center contact = 6.0 m ohms maximum initial. 8.0 m ohms maximum after environment. Outer contact = 1.0 m ohms maximum initial. 1.5 m ohms maximum after environment. Braid to body = 1.0 m ohms maximum
Engagement Design	MIL-C-39012 , Series SMB
Material	Body, body components and male contacts: Brass, half hard. Female contacts: Beryllium copper, heat treated. Insulators: PTFE. Lockwashers: Phosphor bronze. Crimp ferrule: Annealed copper alloy. Gaskets: Silicone rubber.
Contact Retention	Unless specified otherwise, all connectors feature captivated contacts. When captivated the contacts will withstand 17,8 N (4.0 lbs.) minimum axial force. CECC 2213 = 10 N (2.25 lbs.).
Mounting Information	Mounting Plan V
For more information	Please Contact Cannon Sales Department .
Thread Size	10-32 UNF-2A
Mounting Dimension A	4,95+0,13 to -0,00 (.195+.005 to -.000)
Mounting Dimension B	4,50+0,13 to -0,00 (.177+.005 to -.000)
Footnote	Dimension are shown in mm (inch). Dimensions subject to change.

Sales Support

Product Home

Stock Check

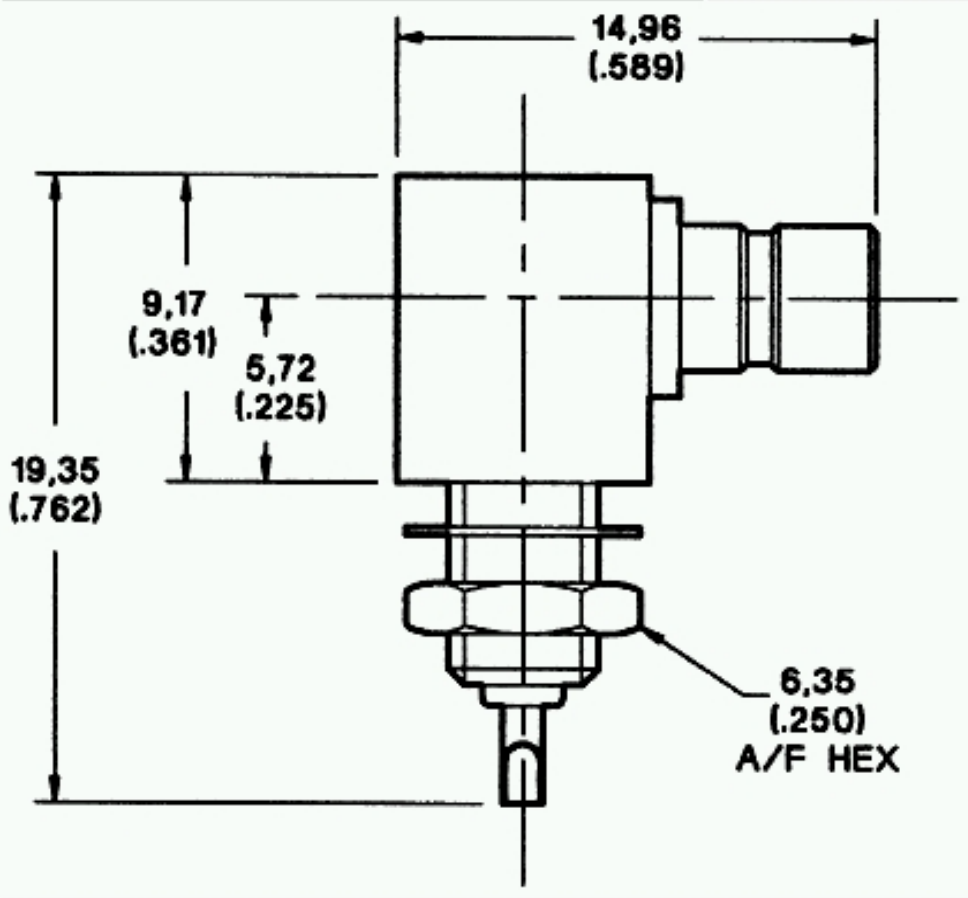

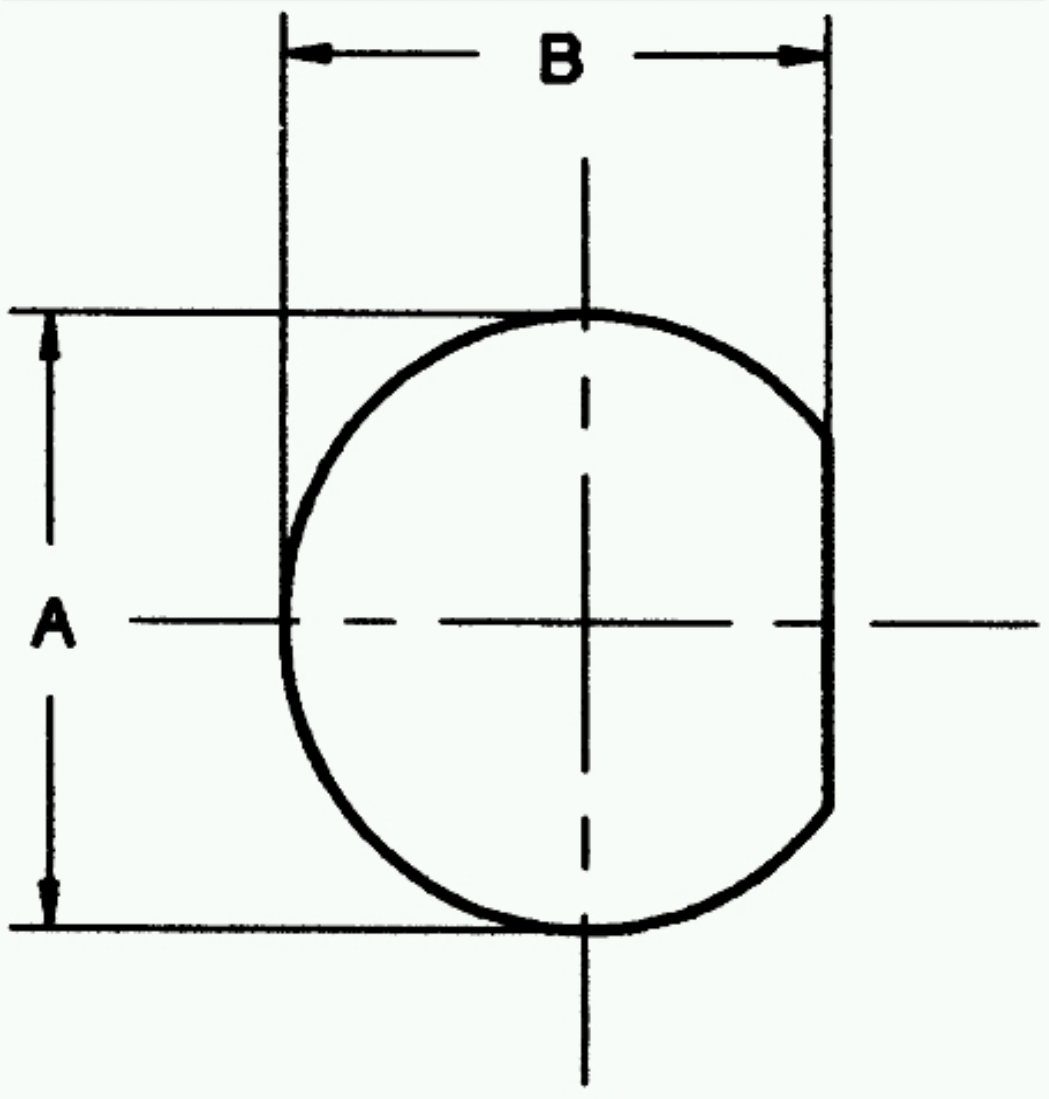

© ITT Corporation. All rights reserved. Legal Disclaimer | Privacy Policy | General Terms of Sale

Downloaded from Arrow.com.