OCHSA10

800 x 800 product brief

Compact Medical Camera Module with Industry's Fastest Frame Rate at the Highest 640k Resolution

OMNIVISION's OCHSA10 is the latest member of its growing family of reflowable CameraCubeChip® wafer-level camera modules for medical applications. This module offers an industry leading resolution of 800 x 800 with the highest frame rate of 60 fps, or 400 x 400 resolution at 90 fps, for blur-free images and video. Additionally, the OCHSA10 provides a compact size of 2.6 mm x 1.6 mm and excellent RAW color imaging performance because it integrates an infrared (IR) cut filter, eliminating the chromatic effects from IR light that cause color fidelity loss. This precise color reproduction is crucial for accurately identifying abnormalities within the body.

The powerful OMNIVISION PureCel®Plus-S stacked pixel technology imbues the OCHSA10 with high sensitivity, high full-well capacity, zero blooming, low noise, stabilized black level and low power consumption. Benefits of this pixel architecture also include a buried color filter array for better angular response, a higher chief ray angle and deep trench isolation for reduced crosstalk. These features provide improved image quality over competing architectures.

OCHSA10 offers both 120 deg and 90 deg field of view options, in order to provide doctors, veterinarians and industrial applications with the best possible endoscopic images. To enable use within the body, the OCHSA10 is the only camera module in its class that offers ETO and STERRAD sterilization capabilities, along with waterproofing and biocompatibility. Additionally, it has low power consumption of 82.2 mW to reduce heat at the distal tip of the endoscope for enhanced patient comfort.

Find out more at www.ovt.com.

OMNIVISION®

Downloaded from Arrow.com.

OCHSA10

Ordering Information

- **OCHSA10-RAMA-001A** (color, lead-free) CameraCubeChip® with black coating
- **OCHSA10-RAQA-001A** (color, lead-free) CameraCubeChip® with black coating

Applications

- single-use medical, dental, veterinarian and industrial endoscopes

Technical Specifications

- **active array size:** 800 x 800
- **maximum transfer rate:**
  - 800 x 800: 60 fps
  - 400 x 400: 90 fps
- **power supply:**
  - analog: 2.7 to 3.0V (2.8V nominal)
  - core: 1.14 to 1.26V (1.2V nominal)
  - I/O: 1.7 to 1.9V (1.8V nominal)
- **power requirements:**
  - active: 82.2 mW
  - standby: 0.5 mA
  - XSHUTDN: 2 µA
- **temperature range:**
  - operating: -20°C to +70°C junction temperature
  - stable image: 0°C to +50°C junction temperature
- **output interface:** 1-lane MIPI serial output/LVDS
- **output formats:** 10-bit RGB RAW
- **optical size:** 1/14.25"
- **diagonal field of view (FOV):**
  - RAMA: 120° ±4°
  - RAQA: 90° ±2°
- **f no.:**
  - RAMA: 4.37
  - RAQA: 5.1
- **focal length:**
  - RAMA: 0.445 mm
  - RAQA: 0.582 mm
- **pixel size:** 1.116 µm x 1.116 µm
- **package dimensions (including ball height):**
  - RAMA: 2608 x 1609 x 2615 µm
  - RAQA: 2608 x 1609 x 2965 µm

Product Features

- OCHSA10 is an 800 x 800 CameraCubeChip® based on OH01A10 color CMOS image sensor
- non-autoclavable
- highest resolution in small die size
- best image quality
- high frame rate for jitter-free images
- PureCel® high color fidelity
  - high FWC with less saturation
  - best low light sensitivity
  - almost no blooming
  - low noise
  - better color crosstalk
  - higher QE performance
- supports images sizes:
  - 800 x 800
  - VGA (640 x 480)
  - 400 x 400, and more
- output format can be 8/10-bit RGB RAW
- stereo ready (frame sync)
- sync light source (strobe)
- horizontal and vertical subsampling
- low power
  - more than 25% lower power than previous generation
  - low power mode for subsampling modes (<10 mW)
- on-chip phase lock loop (PLLs)
- 2x2 analog binning support
- image quality controls:
  - lens shading
  - denoise
  - manual exposure
  - gain control
  - defect pixel correction
  - automatic black level calibration
- group hold

Functional Block Diagram

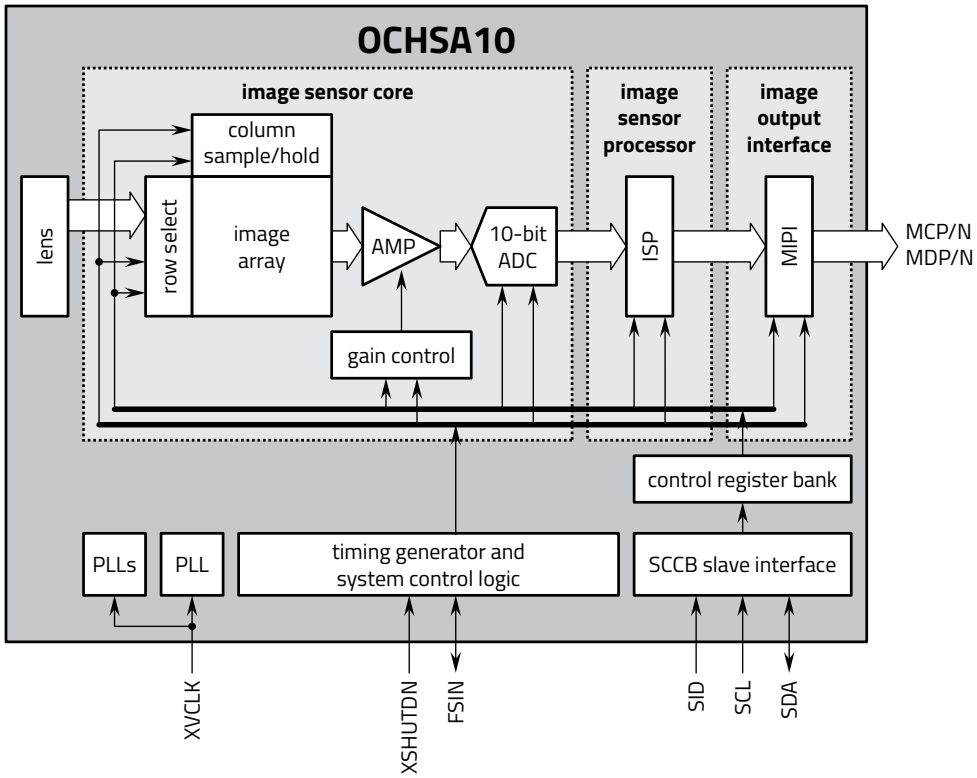

Version 1.3, September 2024

4275 Burton Drive
Santa Clara, CA 95054
USA

Tel: + 1 408 567 3000
Fax: + 1 408 567 3001
www.ovt.com

OMNIVISION reserves the right to make changes to their products or to discontinue any product or service without further notice. OMNIVISION, the OMNIVISION logo, PureCel, and CameraCubeChip are registered trademarks of OmniVision Technologies, Inc. All other trademarks are the property of their respective owners.

OMNIVISION®

Downloaded from Arrow.com.