Bluetooth® Low Energy Module

Bluetooth® Core 6.0

EC4L15BA1
EC4L10BA1
EC4L05BA1

Data Sheet

By purchase of any products described in this document, the customer is deemed to understand and accept contents of this document.

The ***Bluetooth***® word mark and logos are owned by the ***Bluetooth*** SIG, Inc. and any use of such marks by KAGA FEI Co., Ltd. is under license.

Copyright 2026 KAGA FEI Co., Ltd.

Downloaded from Arrow.com.

Contents

1. Document constituent list **3**
2. General Items **4**
2.1. Scope 4
2.2. Description 4
3. Absolute maximum ratings **17**
4. Electrical characteristics **18**
4.1. Recommendation operating range 18
4.2. DC Specifications 18
4.3. RF Specifications 19
5. Circuit Schematic **20**
5.1. Block Diagram 20
5.2. Reference Circuits 21
6. Outline/Appearance **22**
7. Pin Layout **24**
8. Handling Precaution **27**
8.1. Environment conditions for use and storage 27
8.2. Conditions for handling of products 27
9. Packaging Specification **29**
9.1. Packaging Specification 29
9.2. Tape specification 30
9.3. Reel specification 31
9.4. Taping performance 32
10. Antenna application note **33**
10.1. Recommended module mounting example 33
10.2. Other module mounting examples 34
10.3. Placement of resin or plastic parts 34
10.4. Directional characteristics example (when mounted on evaluation board) 35
About this Application Note 35
11. Design guide **36**
11.1. Power Up Sequence 36
11.2. Recommended Power Circuit 36
11.3. Battery operation 36
11.4. Pattern Design Guide 36
11.4.1. Power Supply System 36
11.4.2. Bypass Capacitor Layout 36
11.4.3. GND Pattern 36
Precautions **37**

Copyright 2026 KAGA FEI Co., Ltd.

Downloaded from Arrow.com.

1.Document constituent list

Control name	Control No.	Document Page
General Items	KM-AG-A243001	1/13 - 13/13
Absolute maximum ratings	KM-AM-A243001	1/1
Electrical characteristics	KM-AE-A243001	1/2 - 2/2
Circuit schematic	KM-MC-A243001	1/2 - 2/2
Outline / Appearance	KM-AD-A243001	1/2 - 2/2
Pin Layout	KM-BA-A243001	1/3 - 3/3
Handling Precaution	MQ-H-003	1/2 - 2/2
Packaging Specification	KM-BB-A243001	1/4 - 4/4
Antenna application note	-	1/3 - 3/3
Design guide	-	1/1
Precautions	MQ-P-001	1/1

Revision History

13-Feb. 2026 > Ver.1.0 Release

Copyright 2026 KAGA FEI Co., Ltd.

Downloaded from Arrow.com.

2.General Items

2.1.Scope

This specification (“Specification”) applies to the hybrid ICs “EC4L15BA1”, “EC4L10BA1”, and “EC4L05BA1” (collectively, the “Product”) designed for ***Bluetooth***® Core 6.0, manufactured by KAGA FEI Co., Ltd. (“KAGA FEI”).
The differences among these models are limited to their respective memory capacities, and their fundamental performance is identical.
For details on the memory capacity, refer to “b) Chip” in Section 2.2, Description.

2.2.Description

a) User Code : EC4L15BA1…nRF54L15-QFAA-R
EC4L10BA1…nRF54L10-QFAA-R
EC4L05BA1…nRF54L05-QFAA-R
MODEL : EC4L15 / EC4L10 / EC4L05
*User Code may be changed for mass production or other cases.
Note: Please use the Part Number (EC4L15BA1, EC4L10BA1, EC4L05BA1) to order this product

b) Chip :

Model Name	Chip Name	Manufacturer	NVM	RAM
EC4L15BA1	nRF54L15	Nordic	1.5 MB	256 KB
EC4L10BA1	nRF54L10	Nordic	1.0 MB	192 KB
EC4L05BA1	nRF54L05	Nordic	0.5 MB	96 KB

c) Function : Radio frequency transceiver Module. Bluetooth® Core 6.0 conformity.

d) Application : IoT Devices, Industrial Equipment, Smart Home and Matter, Lighting, Smart Key, PC Accessories

e) Structure : Hybrid IC loaded with silicon monolithic semiconductor
Regarding the containment of hazardous substance in this Product, it conforms to RoHS Directive.

f) Outline : 9.6 x 12.9 x 2.0 mm
47-pin Land Grid Array

g) Marking : Part Number, Lot Number, Radio Law ID Number(Japan : MIC, USA : FCC , Canada : ISED) and manufacturer on Shielding Case

h) Country of origin : Japan or Thailand

i) Packaging : Packaging method: Tape & reel + aluminum moisture barrier bag
Packaging unit: 1000
* The samples may have different packing specification.

Copyright 2026 KAGA FEI Co., Ltd.

Downloaded from Arrow.com.

j) Notes:

a. Limitation of Warranty

1) KAGA FEI provides warranties only if the Product is operated under the condition set forth in this Specification. Please note that KAGA FEI shall not be liable for any defect and/or malfunction arising from use of the Product under the terms and conditions other than the operating conditions hereof. In addition, when this Product is used under environmental conditions such as over voltage which is not guaranteed, it may be destroyed in short mode. To ensure the security of customer's product, please add an extra fuse or/and a protection circuit for over voltage.
2) This Product is designed for use in products which comply with Bluetooth® Specifications. KAGA FEI disclaims and is not responsible for any liability concerning infringement by this Product under any intellectual property right owned by third party in case the customer uses this Product in any product which does not comply with Bluetooth® Specifications (the "non-complying products"). Furthermore, KAGA FEI warrants only that this Product complies with this Specification and does not grant any other warranty including warranty for application of the non-complying products.
3) In some cases, KAGA FEI may use replacements as component parts of Products. Such replacement shall apply only to component part of Products, which KAGA FEI deems it possible to replace or substitute according to (i) Scope of Warranty provided in this specification (e.g. Electric Characteristics, Outline, dimension, Conditions of Use, Reliability Tests, Official Standard (Type Approvals etc.)) and (ii) Quality of Products. KAGA FEI also ensures traceability of such replacement on production lot basis.

b. Instruction for Use (CAUTION)

1) This Product is not designed to be radiation-resistant. Please do not expose Product to radiation.
2) Communication between this Product and other might not be established nor maintained depending upon radio environment or operating condition of this Product and other products with wireless technology.
3) This Product operates in the unlicensed ISM band at 2.4GHz. In case this Product is used around the other wireless devices which operate in same frequency band of this Product, there is a possibility that interference occurs between this Product and such other devices. If such interference occurs, please stop the operation of other devices or relocate this Product before using this Product or do not use this Product around the other wireless devices.
4) This Product mentioned in this Specification is manufactured for use in IoT Devices, Industrial Equipment, Smart Home and Matter, Lighting, Smart Key, PC Accessories. Before using this Product in any special equipment (such as medical equipment, space equipment, aircraft, disaster prevention equipment), where higher safety and reliability are duly required, the applicability and suitability of this Product must be fully evaluated by the customer at its sole risk to ensure correct and safety operation of those special equipments. Also, evaluation of the safety function of this Product even for use in general electronics equipment shall be thoroughly made and when necessary, a protective circuit shall be added in design stage, all at the customer's sole risk.

Copyright 2026 KAGA FEI Co., Ltd.

Downloaded from Arrow.com.

5) Japan Regulatory Information

This module is approved with the specific antenna on this module. Please ensure that your product can also bear a label with the following information. If the product is so small that it is not practicable to place the label, you can also place it in the instruction manual and package. The mark diameter shall be easily legible without using a device such as light microscopes.

R 005-103847

It is recommended to include the following sentence in the user manual of your product:
This product installs a radio system which has been approved as a radio station in a low power data communication system based on the Radio Law.
EC4L15, EC4L10 and EC4L05 : 005-103847

6) Canada Regulatory Information

a) This device contains licence-exempt transmitter(s)/receiver(s) that comply with Innovation, Science and Economic Development Canada's licence-exempt RSS(s). Operation is subject to the following two conditions:
(1) this device may not cause interference, and
(2) this device must accept any interference, including interference that may cause undesired operation of the device.

Cet appareil contient un ou des émetteur (s) / récepteur (s) exempt (s) de licence qui sont conformes aux flux RSS exempts de licence d'Innovation, Sciences et Développement économique Canada. Le fonctionnement est soumis aux deux conditions suivantes:
(1) Cet appareil ne doit pas causer d'interférences.
(2) Cet appareil doit accepter toute interférence, y compris les interférences pouvant entraîner un fonctionnement indésirable de l'appareil.

Copyright 2026 KAGA FEI Co., Ltd.

Downloaded from Arrow.com.

b) Please label ISED certification number and Host Marketing Name (HMN) at any location on the exterior of your product. Please indicate ISED certification number by either one of the following methods:

Veuillez étiqueter le numéro de certification ISED et le nom commercial de l'hôte à tout emplacement sur l'extérieur de votre produit. Veuillez indiquer le numéro de certification ISED par l'une des méthodes suivantes.

-Contains Transmitter module IC: TBD
-Contains IC: TBD
* The certification number used is the same as that used for EC4L10 and EC4L05.

Host Marketing Name (HMN)
-The HMN is the name or model number of a final product, which contains a certified radio module.
-The Host Marketing Name (HMN) shall be displayed according to the e-labelling requirements of RSS-Gen, section 4.4 or indicated on the exterior of the host product or on the product packaging, or in the product literature, which shall be supplied with the host product or readily available online.

c) To maintain compliance with ISED's RF exposure guidelines, this equipment should be installed and operated with minimum distance 10cm between the radiator and your body.

Copyright 2026 KAGA FEI Co., Ltd.

Downloaded from Arrow.com.

d) The following information must be indicated in the user manual of the host device of this module;

This device contains licence-exempt transmitter(s)/receiver(s) that comply with Innovation, Science and Economic Development Canada's licence-exempt RSS(s). Operation is subject to the following two conditions: (1) This device may not cause interference. (2) This device must accept any interference, including interference that may cause undesired operation of the device.

Cet appareil contient un ou des émetteur (s) / récepteur (s) exempt (s) de licence qui sont conformes aux flux RSS exempts de licence d'Innovation, Sciences et Développement économique Canada. Le fonctionnement est soumis aux deux conditions suivantes: (1) Cet appareil ne doit pas causer d'interférences. (2) Cet appareil doit accepter toute interférence, y compris les interférences pouvant entraîner un fonctionnement indésirable de l'appareil.

7) FCC Regulatory Information

a) This device complies with part 15 of the FCC Rules.
-Part 15 Subpart C

b) This device complies with part 15 of the FCC Rules. Operation is subject to the following two conditions:
(1) This device may not cause harmful interference, and
(2) this device must accept any interference received, including interference that may cause undesired operation.

c) Please notify certified ID by either one of the following methods on your product.
-Contains Transmitter Module FCC ID: TBD
-Contains FCC ID: TBD
* The certification number used is the same as that used for EC4L10 and EC4L05.

d) CAUTION: Any changes or modifications not expressly approved by the party responsible for compliance could void the use's authority to operate the equipment.

e) The modular transmitter is only FCC authorized for the specific rule parts (Part 15 Subpart C) listed on the grant, and the host product manufacturer is responsible for compliance to any other FCC rules that apply to the host not covered by the modular transmitter grant of certification. The final host product still requires Part 15 Subpart B compliance testing with the modular transmitter installed.

f) The antenna used for this transmitter must not be co-located with, nor operated in conjunction with, any other antenna or transmitter.

g) This module can change the output power depending on the circumstances by the application software which is developed by module installer. Any end user cannot change the output power.

Copyright 2026 KAGA FEI Co., Ltd.

Downloaded from Arrow.com.

h) This modular transmitter is FCC authorized only for the rule parts listed on our grant; host manufacturers must ensure compliance with any other applicable FCC rules not covered by the transmitter certification.

Host manufacturer in any case shall ensure host product which is installed and operating with the module is in compliant with Part 15B requirements. Please note that for a Class B or A digital devices or peripheral, the instructions furnished the user manual of the end-user product shall include statement set out in §15.105 Information to the user or such similar statement and place it in a prominent location in the text of host product manual. Original texts as following:

<For Class A>
NOTE: This equipment has been tested and found to comply with the limits for a Class A digital device, pursuant to part 15 of the FCC Rules. These limits are designed to provide reasonable protection against harmful interference when the equipment is operated in a commercial environment. This equipment generates, uses, and can radiate radio frequency energy and, if not installed and used in accordance with the instruction manual, may cause harmful interference to radio communications. Operation of this equipment in a residential area is likely to cause harmful interference in which case the user will be required to correct the interference at his own expense.

<For Class B>
NOTE: This equipment has been tested and found to comply with the limits for a Class B digital device, pursuant to part 15 of the FCC Rules. These limits are designed to provide reasonable protection against harmful interference in a residential installation. This equipment generates, uses and can radiate radio frequency energy and, if not installed and used in accordance with the instructions, may cause harmful interference to radio communications. However, there is no guarantee that interference will not occur in a particular installation. If this equipment does cause harmful interference to radio or television reception, which can be determined by turning the equipment off and on, the user is encouraged to try to correct the interference by one or more of the following measures:
- Reorient or relocate the receiving antenna.
- Increase the separation between the equipment and receiver.
- Connect the equipment into an outlet on a circuit different from that to which the receiver is connected.
- Consult the dealer or an experienced radio/ TV technician for help.

i) To maintain compliance with FCC's RF exposure guidelines, this equipment should be installed and operated with minimum distance 10cm between the radiator and your body.

j) Co-location of this module with other transmitters that operate simultaneously are required to be evaluated using the FCC multi transmitter procedures. When installing this module to your final devices, please make sure to carry out all the necessary evaluations according to the applicable guidelines like follows:
-for RF exposure: KDB 447498, KDB 996369 and any other relevant guidelines
-for EMC: KDB 996369 D04 and any other relevant guidelines

k) When you install this module to your final devices, please ensure that your final composite product complies with the applicable FCC rules in reference to a guidance in KDB 996369.

Copyright 2026 KAGA FEI Co., Ltd.

Downloaded from Arrow.com.

l) Antenna List
This module is approved along with the following antenna.
You cannot use any antennas other than the listed one because it deviates from the accredited conditions.

Manufacturer	KAGA FEI
Part No.	AC-001 (Printed on PCB) Dimensions 9.6mm x 3mm
Antenna Type	Monopole
Maximum Antenna Gain	-2.9 dBi

m) The following information must be indicated in the user manual of the host device of this module;

This device complies with part 15 of the FCC Rules. Operation is subject to the following two conditions: (1) This device may not cause harmful interference, and (2) this device must accept any interference received, including interference that may cause undesired operation.

FCC CAUTION: Any changes or modifications not expressly approved by the party responsible for compliance could void the use's authority to operate the equipment.

The antenna used for this transmitter must not be co-located or operating in conjunction with any other antenna or transmitter.

n) It is prohibited a host from utilizing a module to violate operating conditions, labeling, or notifications (e.g. indoor use).

Copyright 2026 KAGA FEI Co., Ltd.

Downloaded from Arrow.com.

8) CE Regulatory Information

a) Manufacturer Information:
Manufactured by: KAGA FEI Co., Ltd.
Trade name: KAGA FEI
Postal address: Gunseisha ANNEX Bldg. 5th floor, 382-1, Kaminamie-machi, Takasaki, Gunma, 370-0801, Japan.

b) Importer Information:
Imported by: KAGA FEI EUROPE GmbH
Trade name: KAGA FEI EUROPE GmbH
Postal address: Robert-Bosch-Straße 25, 63225 Langen (Hessen), Germany

c) Harmonized standards:TBD

d) When your end product installs this module, it is required to proceed additional certification processes before placing on the market in EU member states to make your products fully comply with relative EU standards.

e) KAGA FEI can provide you the test reports of conducted measurement portion for the radio module. You can utilize the test reports for the certification processes of your end product as it requires radio testing.

f) Maximum radio-frequency power: +7dBm

g) Frequency band:
Operating frequency range: 2400 to 2483.5 MHz

Copyright 2026 KAGA FEI Co., Ltd.

Downloaded from Arrow.com.

h) Simplified EU Declaration of Conformity (SDoC)

No	Language	SDoC
1	Българин [Bulgarian]	С настоящото KAGA FEI Co., Ltd. декларира, че този тип радиосъоръжение EC4L15 / EC4L10 / EC4L05 е в съответствие с Директива 2014/53/ЕС. Цялостният текст на ЕС декларацията за съответствие може да се намери на следния интернет адрес: https://www.kagafei.com/jp/eng/products/wireless-modules/bluetooth/
2	Español [Spanish]	Por la presente, KAGA FEI Co., Ltd. declara que el tipo de equipo radioeléctrico EC4L15 / EC4L10 / EC4L05 es conforme con la Directiva 2014/53/UE. El texto completo de la declaración UE de conformidad está disponible en la dirección Internet siguiente: https://www.kagafei.com/jp/eng/products/wireless-modules/bluetooth/
3	Česky [Czech]	Tímto KAGA FEI Co., Ltd. prohlašuje, že typ rádiového zařízení EC4L15 / EC4L10 / EC4L05 je v souladu se směrnicí 2014/53/EU. Úplné znění EU prohlášení o shodě je k dispozici na této internetové adrese: https://www.kagafei.com/jp/eng/products/wireless-modules/bluetooth/
4	Dansk [Danish]	Hermed erklærer KAGA FEI Co., Ltd., at radioudstyrstypen EC4L15 / EC4L10 / EC4L05 er i overensstemmelse med direktiv 2014/53/EU. EU-overensstemmelseserklæringens fulde tekst kan findes på følgende internetadresse: https://www.kagafei.com/jp/eng/products/wireless-modules/bluetooth/
5	Deutsch [German]	Hiermit erklärt KAGA FEI Co., Ltd., dass der Funkanlagentyp EC4L15 / EC4L10 / EC4L05 der Richtlinie 2014/53/EU entspricht. Der vollständige Text der EU-Konformitätserklärung ist unter der folgenden Internetadresse verfügbar: https://www.kagafei.com/jp/eng/products/wireless-modules/bluetooth/
6	Eesti [Estonian]	Käesolevaga deklareerib KAGA FEI Co., Ltd., et käesolev raadioseadme tüüp EC4L15 / EC4L10 / EC4L05 vastab direktiivi 2014/53/EL nõuetele. ELi vastavusdeklaratsiooni täielik tekst on kättesaadav järgmisel internetiaadressil: https://www.kagafei.com/jp/eng/products/wireless-modules/bluetooth/
7	Ελληνική [Greek]	Με την παρούσα ο/ηKAGA FEI Co., Ltd., δηλώνει ότι ο ραδιοεξοπλισμός EC4L15 / EC4L10 / EC4L05 πληροί την οδηγία 2014/53/ΕΕ. Το πλήρες κείμενο της δήλωσης συμμόρφωσης ΕΕ διατίθεται στην ακόλουθη ιστοσελίδα στο διαδίκτυο: https://www.kagafei.com/jp/eng/products/wireless-modules/bluetooth/
8	English	Hereby, KAGA FEI Co., Ltd. declares that the radio equipment type EC4L15 / EC4L10 / EC4L05 is in compliance with Directive 2014/53/EU. The full text of the EU declaration of conformity is available at the following internet address: https://www.kagafei.com/jp/eng/products/wireless-modules/bluetooth/

Copyright 2026 KAGA FEI Co., Ltd.

Downloaded from Arrow.com.

9	Français [French]	Le soussigné, KAGA FEI Co., Ltd., déclare que l'équipement radioélectrique du type EC4L15 / EC4L10 / EC4L05 est conforme à la directive 2014/53/UE. Le texte complet de la déclaration UE de conformité est disponible à l'adresse internet suivante: https://www.kagafei.com/jp/eng/products/wireless-modules/bluetooth/
10	Gaeilge [Irish]	Leis seo, dearbhaíonn KAGA FEI Co., Ltd. go gcomhlíonann an cineál trealaimh raidió EC4L15 / EC4L10 / EC4L05 Treoir 2014/53 / AE. Tá téacs iomlán dhearbhú comhréireachta an AE ar fáil ag an seoladh idirlín seo a leanas: https://www.kagafei.com/jp/eng/products/wireless-modules/bluetooth/
11	Hrvatski [Croatian]	KAGA FEI Co., Ltd. ovime izjavljuje da je radijska oprema tipa EC4L15 / EC4L10 / EC4L05 u skladu s Direktivom 2014/53/EU. Cjeloviti tekst EU izjave o sukladnosti dostupan je na sljedećoj internetskoj adresi: https://www.kagafei.com/jp/eng/products/wireless-modules/bluetooth/
12	Italiano [Italian]	Il fabbricante, KAGA FEI Co., Ltd., dichiara che il tipo di apparecchiatura radio EC4L15 / EC4L10 / EC4L05 è conforme alla direttiva 2014/53/UE. Il testo completo della dichiarazione di conformità UE è disponibile al seguente indirizzo Internet: https://www.kagafei.com/jp/eng/products/wireless-modules/bluetooth/
13	Latviski [Latvian]	Ar šo KAGA FEI Co., Ltd. deklarē, ka radioiekārta EC4L15 / EC4L10 / EC4L05 atbilst Direktīvai 2014/53/ES. Pilns ES atbilstības deklarācijas teksts ir pieejams šādā interneta vietnē: https://www.kagafei.com/jp/eng/products/wireless-modules/bluetooth/
14	Lietuvių [Lithuanian]	Aš, KAGA FEI Co., Ltd., patvirtinu, kad radijo įrenginių tipas EC4L15 / EC4L10 / EC4L05 atitinka Direktyvą 2014/53/ES. Visas ES atitikties deklaracijos tekstas prieinamas šiuo interneto adresu: https://www.kagafei.com/jp/eng/products/wireless-modules/bluetooth/
15	Magyar [Hungarian]	KAGA FEI Co., Ltd. igazolja, hogy a EC4L15 / EC4L10 / EC4L05 típusú rádióberendezés megfelel a 2014/53/EU irányelvnek. Az EU-megfelelőségi nyilatkozat teljes szövege elérhető a következő internetes címen: https://www.kagafei.com/jp/eng/products/wireless-modules/bluetooth/
16	Malti [Maltese]	B'dan, KAGA FEI Co., Ltd., niddikjara li dan it-tip ta' tagħmir tar-radju EC4L15 / EC4L10 / EC4L05 huwa konformi mad-Direttiva 2014/53/UE. It-test kollu tad-dikjarazzjoni ta' konformità tal-UE huwa disponibbli f'dan l-indirizz tal-Internet li ġej: https://www.kagafei.com/jp/eng/products/wireless-modules/bluetooth/
17	Nederlands [Dutch]	Hierbij verklaar ik, KAGA FEI Co., Ltd., dat het type radioapparatuur EC4L15 / EC4L10 / EC4L05 conform is met Richtlijn 2014/53/EU. De volledige tekst van de EU-conformiteitsverklaring kan worden geraadpleegd op het volgende internetadres: https://www.kagafei.com/jp/eng/products/wireless-modules/bluetooth/

Copyright 2026 KAGA FEI Co., Ltd.

Downloaded from Arrow.com.

18	Polski [Polish]	KAGA FEI Co., Ltd. niniejszym oświadcza, że typ urządzenia radiowego EC4L15 / EC4L10 / EC4L05 jest zgodny z dyrektywą 2014/53/UE. Pełny tekst deklaracji zgodności UE jest dostępny pod następującym adresem internetowym: https://www.kagafei.com/jp/eng/products/wireless-modules/bluetooth/
19	Português [Portuguese]	O(a) abaixo assinado(a) KAGA FEI Co., Ltd. declara que o presente tipo de equipamento de rádio EC4L15 / EC4L10 / EC4L05 está em conformidade com a Diretiva 2014/53/UE. O texto integral da declaração de conformidade está disponível no seguinte endereço de Internet: https://www.kagafei.com/jp/eng/products/wireless-modules/bluetooth/
20	Român [Romanian]	Prin prezenta, KAGA FEI Co., Ltd. declară că tipul de echipamente radio EC4L15 / EC4L10 / EC4L05 este în conformitate cu Directiva 2014/53/UE. Textul integral al declarației UE de conformitate este disponibil la următoarea adresă internet: https://www.kagafei.com/jp/eng/products/wireless-modules/bluetooth/
21	Slovensky [Slovak]	KAGA FEI Co., Ltd. týmto vyhlasuje, že rádiové zariadenie typu EC4L15 / EC4L10 / EC4L05 je v súlade so smernicou 2014/53/EÚ. Úplné EÚ vyhlásenie o zhode je k dispozícii na tejto internetovej adrese: https://www.kagafei.com/jp/eng/products/wireless-modules/bluetooth/
22	Slovensko [Slovenian]	KAGA FEI Co., Ltd. potrjuje, da je tip radijske opreme EC4L15 / EC4L10 / EC4L05 skladen z Direktivo 2014/53/EU. Celotno besedilo izjave EU o skladnosti je na voljo na naslednjem spletnem naslovu: https://www.kagafei.com/jp/eng/products/wireless-modules/bluetooth/
23	Suomi [Finnish]	KAGA FEI Co., Ltd. vakuuttaa, että radiolaitetyyppi EC4L15 / EC4L10 / EC4L05 on direktiivin 2014/53/EU mukainen.EU-vaatimustenmukaisuusvakuutuksen täysimittainen teksti on saatavilla seuraavassa internetosoitteessa: https://www.kagafei.com/jp/eng/products/wireless-modules/bluetooth/
24	Svenska [Swed ish]	Härmed försäkrar KAGA FEI Co., Ltd. att denna typ av radioutrustning EC4L15 / EC4L10 / EC4L05 överensstämmer med direktiv 2014/53/EU. Den fullständiga texten till EU-försäkran om överensstämmelse finns på följande webbadress: https://www.kagafei.com/jp/eng/products/wireless-modules/bluetooth/
25	Türkçe [Turkish]	İşbu belgede, KAGA FEI Co., Ltd. telsiz cihazı tipinin EC4L15 / EC4L10 / EC4L05 2014/53/EU Direktifi ile uyumlu olduğunu beyan eder. AB uygunluk beyanının tam metnine aşağıdaki internet adresinden ulaşılabilir: https://www.kagafei.com/jp/eng/products/wireless-modules/bluetooth/

Copyright 2026 KAGA FEI Co., Ltd.

Downloaded from Arrow.com.

c. Term of Support

1) In the case that customer requests KAGA FEI to customize the hardware of this Product in order to meet such customer's specific needs, KAGA FEI will make commercially reasonable effort to modify such hardware or software at customer's expense; provide however, the customer is kindly requested to agrees it doesn't mean that KAGA FEI has obligations to do so even in the case it is technically difficult for KAGA FEI.
2) Any failure arising out of this Product will be examined by KAGA FEI regardless of before or after mass production. Customer agrees that once such failure is turned out not to be responsible for KAGA FEI after aforesaid examination, some of the technical support shall be conducted by KAGA FEI at customer's expense; provided however, exact cost of this technical support can be agreed through the negotiation by the parties.
3) Do not alter hardware and/or software of this Product. Please note that KAGA FEI shall not be liable for any problem if it is caused by customer's alteration of Hardware without KAGA FEI's prior approvals.
4) KAGA FEI does not guarantee functions and performances which depend on the customer's firmware. KAGA FEI does not assume liabilities for defects and failures (i) in functions, performances and quality of the Customer's product incorporating the Products and (ii) which may occur as the Product is incorporated in the Customer's product.

d. Caution for Export Control

This Product may be subject to governmental approvals, consents, licenses, authorizations, declarations, filings, and registrations for export or re-export of the Product, required by Japanese Foreign Exchange and Foreign Trade Law (including related laws and regulations) and/or any other country's applicable laws or regulations related to export control.

In case you will export or re-export this Product, you are strongly recommended to check and confirm, before exporting or re-exporting, necessary procedures for export or re-export of this Product which is required by applicable laws and regulations, and if necessary, you have to obtain necessary and appropriate approvals or licenses from governmental authority at your own risk and expense.

Copyright 2026 KAGA FEI Co., Ltd.

Downloaded from Arrow.com.

e. Term of Warranty

KAGA FEI warrants only that this Product is in conformity with this Specification for one year after purchase and shall in no event give any other warranty.

f. Items of the Specification

1) Any question arising from the Specification shall be solved in good faith through mutual discussion by the parties hereof.
2) The language of this “General items” is Japanese and this “General items” shall be interpreted by Japanese Any copies of translation is a reference purpose only and is not binding on both parties hereto.

g. Special note

1) The latest errata and document released by Nordic Semiconductor ASA must be referred the document is given priority over this document. Please note that KAGA FEI shall not be liable for any problem and related issue for developed or manufactured application software or product without reference or consideration of the information released by Nordic Semiconductor ASA.
2) This product has no firmware. Customer writes firmware that is match the customer applications at the customer's own responsibility.
3) EC4L series module is qualified as Core-Complete Configuration by Bluetooth SIG. The Design Number of this module is Q379137. The final product needs to complete the Bluetooth Qualification Process before selling the product. Please consult with your qualification body and BQC.
4) Notes on Radio Regulations
   When using this module, ensure that the transmit power is configured to +7 dBm or less in accordance with the radio regulations of each country.

Copyright 2026 KAGA FEI Co., Ltd.

Downloaded from Arrow.com.

3.Absolute maximum ratings

Symbol	Parameter	Min.	Max.	Units
VDD	VDD supply voltage	-0.3	+3.9	V
VDD EXT	VDD supply voltage under extended operating temperature	-0.3	+3.7	V
VIO, VDD≤3.6V	IO voltage	-0.3	VDD + 0.3	V
VIO, VDD>3.6V	IO voltage	-0.3	+3.9	V
VIO,EXT, VDD EXT≤3.4V	IO voltage under extended operating temperature	-0.3	VDD + 0.3	V
VIO,EXT, VDD EXT>3.4V	IO voltage under extended operating temperature	-0.3	+3.7	V
Storage temperature		-40	+105	Deg-C
MSL	Moisture Sensitivity Level	3		
ESD HBM	Human Body Model		1	kV
ESD MM	Machine Model		100	V
Endurance	Flash Memory Endurance	10000		write/erase cycles
Retention	Flash Memory Retention	10 years		At 85 deg-C
		2 years		At 105 deg-C

Copyright 2026 KAGA FEI Co., Ltd.

Downloaded from Arrow.com.

4.Electrical characteristics

4.1.Recommendation operating range

Symbol	Parameter	Min.	Typ.	Max.	Units
VDD	Supply voltage	1.7		3.6	V
VDD EXT	VDD supply voltage under extended operating temperature*1	1.7		3.4	V
VDD POR	VDD supply voltage needed during power-on reset	1.75			V
TA	Operating temperature*2	-40	25	85	Deg-C
TA EXT	Extended operating temperature*2	85		105	Deg-C
T RST	Recommended storage temperature			40	Deg-C
RH RST	Recommended storage relative humidity			90	%

*1 The specifications for this section cover the range from TA minimum to TA EXT maximum. Certain parameters are guaranteed only within the TA operating temperature range.

*2 ANT specification requires +/-50ppm accuracy for 32.768kHz clock. The internal 32.768kHz crystal does not meet to +/-50ppm over the whole recommended operation temperature range.

4.2.DC Specifications

The Specification applies for Topr.= 25 degrees C, VDD = 3.0V

Symbol	Parameter (condition)	Min.	Typ.	Max.	Units
VIH	Input high voltage	0.7 x VDD		VDD	V
VIL	Input low voltage	GND		0.3 x VDD	V
VOH,HDH	Output high voltage, high drive, 5 mA, VDD >= 2.7 V	VDD - 0.4		VDD	V
VOL,SD	Output low voltage, standard drive, 0.5 mA, VDD ≥1.7	GND		GND + 0.4	V
RPU	Pull-up resistance	12	14	16	kohm
RPD	Pull-down resistance	12	14	18	kohm
ITX,MaxdBm	TX only run current for QFN package, PRF at maximum power setting		9.1		mA
IRX,1M	RX only run current, 1 Mbps/1 Mbps Bluetooth LE mode		2.1		mA
IRX,2M	RX only run current, 2 Mbps/2 Mbps Bluetooth LE mode		2.1		mA
IOFF0	System OFF, Wake on pin, 0 KB RAM retained		0.7		uA
ION_IDLE0	System ON, Wake on pin, 0 KB RAM retained		0.8		uA

Copyright 2026 KAGA FEI Co., Ltd.

Downloaded from Arrow.com.

4.3.RF Specifications

Symbol	Description	Min.	Typ.	Max.	Units
f_{OP}	Operating frequencies	2402		2480	MHz
$f_{CH,SP}$	channel spacing		1		MHz
$f_{DELTA,BLE,1M}$	Frequency deviation @ Bluetooth LE 1 Mbps		+/-250		kHz
$f_{DELTA,BLE,2M}$	Frequency deviation @ Bluetooth LE 2 Mbps		+/-500		kHz
P_{RF}	Maximum output power		7		dBm
P_{RFCR}	RF power accuracy	-2		2	dB
$P_{RF1,BLE1M,2MHZ}$	Adjacent Channel Transmit Power 2 MHz (1 Mbps Bluetooth LE mode)		-48		dBc
$P_{RF1,BLE1M,3MHZ}$	Adjacent Channel Transmit Power 3 MHz (1 Mbps Bluetooth LE mode)		-54		dBc
$P_{RX,MAX}$	Maximum received signal strength at < 0.1% PER		0		dBm
$P_{SENS,IT,SP,1M,BLE}$	Sensitivity, 1 Mbps Bluetooth LE ideal transmitter, packet length ≤ 37 bytes (BER = 1E-3[5])		-95		dBm
$P_{SENS,IT,SP,2M,BLE}$	Sensitivity, 2 Mbps Bluetooth LE ideal transmitter, packet length ≤ 37 bytes		-94		dBm
$P_{SENS,IT,BLE\ LE125k}$	Sensitivity, 125 kbps Bluetooth LE mode		-104		dBm
$P_{SENS,IT,BLE\ LE500k}$	Sensitivity, 500 kbps Bluetooth LE mode		-99		dBm

Many documents of nRF54L15, such as product specification and the errata, can be found at the link below (There is a possibility that it will change in the future). Please be sure to check these latest documents when using our module.

nRF54L15_Product Specification
nRF54L15 | nRF54L10 | nRF54L05 Datasheet

nRF54L15_Errata
All Documents

nRF Connect SDK
Introduction

For more information
Technical Documentation

Copyright 2026 KAGA FEI Co., Ltd.

Downloaded from Arrow.com.

5.Circuit Schematic

5.1.Block Diagram

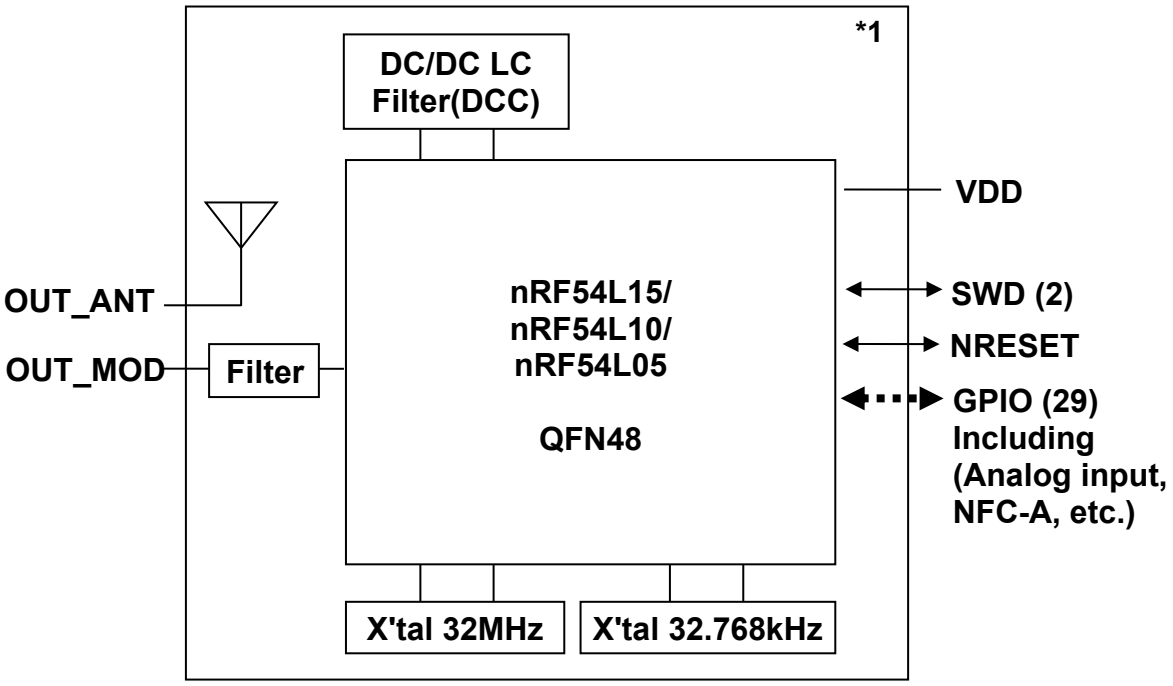

*1 LDO-only mode: Not supported

Copyright 2026 KAGA FEI Co., Ltd.

Downloaded from Arrow.com.

5.2.Reference Circuits

"P0.00-2.10" are GPIOs.
Please keep No Connection for unused pins.

Please use the GPIO voltage under the conditions specified below.
Input high (V): 0.7*VDD to VDD
Input low (V): GND to 0.3*VDD

In order to use the built-in antenna on the module, please connect PAD22 and PAD23 as short as possible.

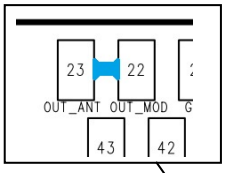

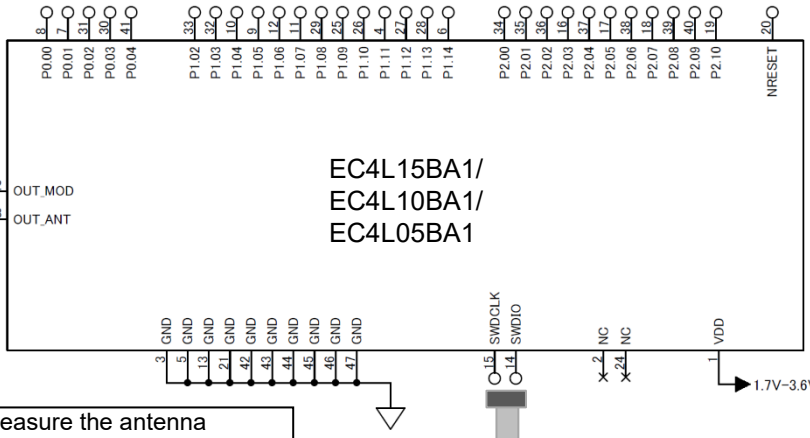

When you want to measure the antenna performance or RF conduction performance, please draw a tie line of PAD22 and PAD23 outside a module.

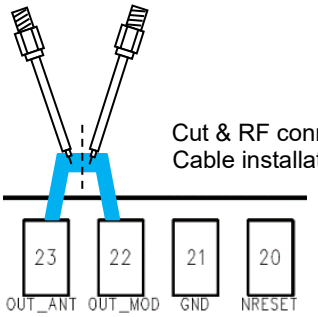

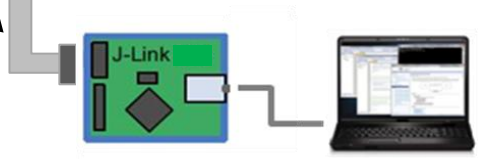

nRF Connect SDK

The bypass capacitor necessary for the power supply line is installed inside the module.
So you do not need to add external capacitors.
However, in case of the operation with the battery, we recommend that you add a bypass capacitor about 100uF in view of the voltage drop during TX/RX.
Please consider whether it is necessary according to the performance of the customer's battery.

SWD (Serial Wire Debug) is a high-performance, 2-pin debug interface designed as an alternative to JTAG.
Application software can be programmed via a debug probe such as the SEGGER J-Link.

For J-Link connectivity, it is recommended to populate the target board with a 10-pin, 1.27mm pitch dual-row connector (e.g., PSS-720153-05 by Hirosugi Instrument).

Copyright 2026 KAGA FEI Co., Ltd.

Downloaded from Arrow.com.

6.Outline/Appearance

Tolerance: +/- 0.2mm
Unit: (mm)

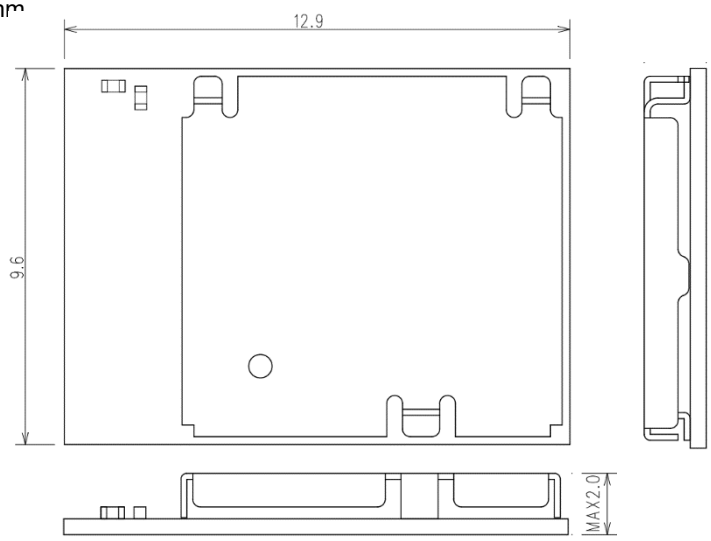

Pad size and recommended **Land size** are the same.

Top View

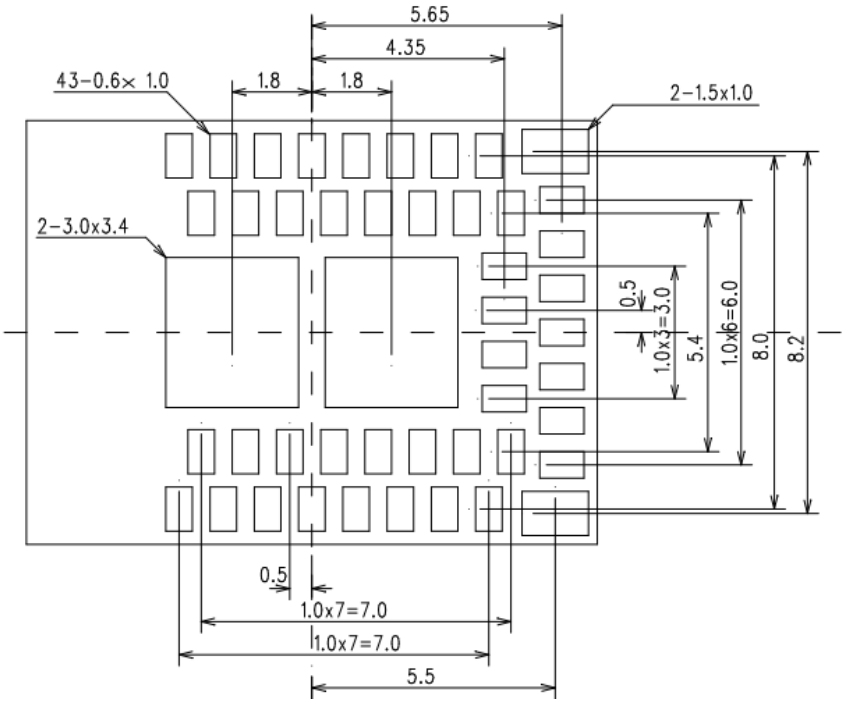

Recommended metal mask for solder printing

Pad size	Mask opening
Signal pad 43 – 0.6 x 1.0 mm	0.5 x 0.9 mm
Corner pad 2 – 1.5 x 1.0 mm	1.0 x 0.7 mm
Center pad 2 – 3.0 x 3.4 mm	2.6 x 3.0 mm

The mask opening should be located in the center of the land.
The metal mask thickness: t=0.1mm. If the metal mask thickness is different, change the mask opening size to adjust the amount of solder.

Copyright 2026 KAGA FEI Co., Ltd.

Downloaded from Arrow.com.

Pin Layout Diagram

Top View

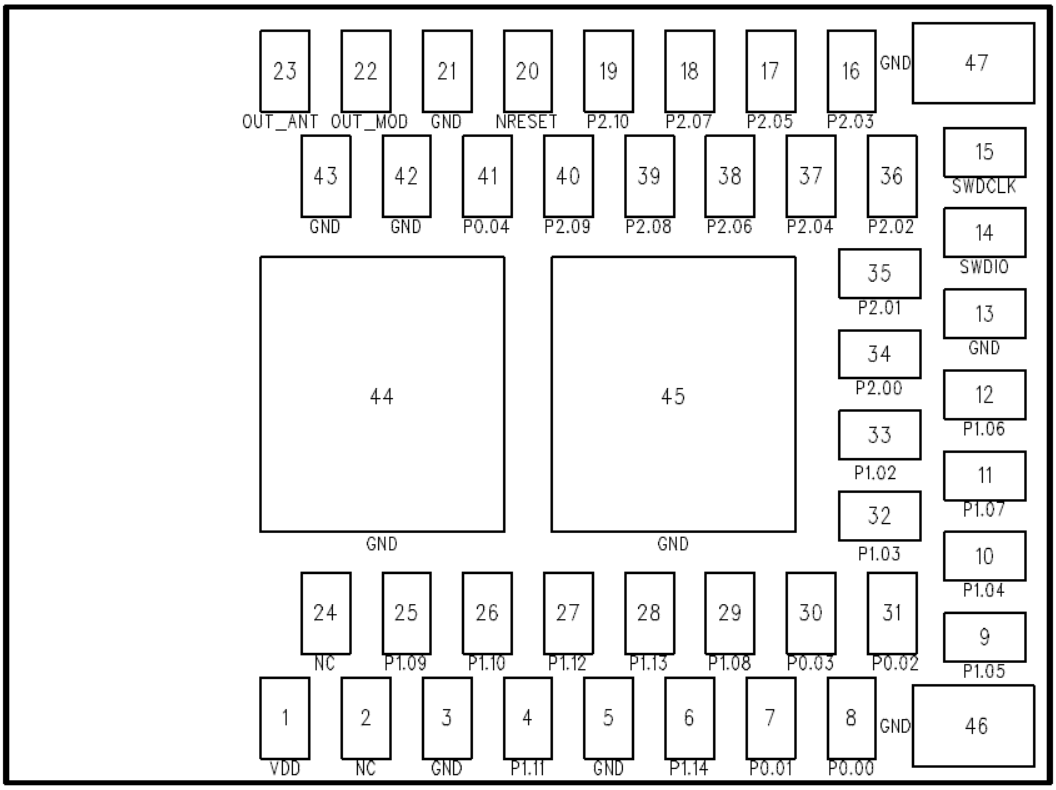

Copyright 2026 KAGA FEI Co., Ltd.

Downloaded from Arrow.com.

7.Pin Layout

Pin Descriptions

Pin	Pin name	Pin function	Description
1	VDD	Power	Power supply
2	NC	NC	NC
3	GND	Ground	Ground pin. (0 V)
4	P1.11 ASO[3] RADIO[2] AIN4	Digital I/O Digital I/O Digital I/O Analog input	General purpose I/O TAMPC active shield 3 output RADIO DFEGPIO Analog input
5	GND	Ground	Ground pin. (0 V)
6	P1.14 RADIO[5] AIN7	Digital I/O Digital I/O Analog input	General purpose I/O RADIO DFEGPIO Analog input
7	P0.01	Digital I/O	General purpose I/O
8	P0.00	Digital I/O	General purpose I/O
9	P1.05 ASI[0] RADIO[6] AIN1	Digital I/O Digital I/O Digital I/O Analog input	General purpose I/O TAMPC active shield 0 input RADIO DFEGPIO Analog input
10	P1.04 ASO[0] AIN0	Digital I/O Digital I/O Analog input	General purpose I/O TAMPC active shield 0 output Analog input
11	P1.07 ASI[1] AIN3	Digital I/O Digital I/O Analog input	General purpose I/O TAMPC active shield 1 input Analog input
12	P1.06 ASO[1] AIN2	Digital I/O Digital I/O Analog input	General purpose I/O TAMPC active shield 1 output Analog input
13	GND	Ground	Ground pin. (0 V)
14	SWDIO	Debug	Serial wire data. Bidirectional with standard-drive and on-chip pull-up.
15	SWDCLK	Debug	Serial wire clock. Input with on-chip pull-down.
16	P2.03	Digital I/O Digital I/O Digital I/O	General purpose I/O FLPR.3 QSPI D2

Copyright 2026 KAGA FEI Co., Ltd.

Downloaded from Arrow.com.

Pin	Pin name	Pin function	Description
17	P2.05	Digital I/O Digital I/O Digital I/O Digital I/O Digital I/O Digital I/O	General purpose I/O SPIM CSN SPIS CSN UARTE RTS FLPR.5 QSPI CSN
18	P2.07 TRACEDATA[0] SWO	Digital I/O Digital I/O Digital I/O Digital I/O Digital I/O Digital I/O	General purpose I/O FLPR.7 Trace data Serial wire output (SWO) SPIM DCX UARTE RXD
19	P2.10 TRACEDATA[3]	Digital I/O Digital I/O Digital I/O Digital I/O Digital I/O Digital I/O	General purpose I/O FLPR.10 Trace data SPIM CSN SPIS CSN UARTE RTS
20	nRESET	Reset	Pin reset with on-chip pull-up
21	GND	Ground	Ground pin. (0 V)
22	OUT_MOD	RF In/Out	RF I/O pin. It should be connected to Pin 23 OUT_ANT for normal operation.
23	OUT_ANT	Antenna In/Out	Internal antenna. It should be connected to Pin 22 OUT_MOD for normal operation.
24	NC	NC	NC
25	P1.09 ASO[2] RADIO[0]	Digital I/O Digital I/O Digital I/O	General purpose I/O TAMPC active shield 2 output RADIO DFEGPIO
26	P1.10 ASI[2] RADIO[1]	Digital I/O Digital I/O Digital I/O	General purpose I/O TAMPC active shield 2 input RADIO DFEGPIO
27	P1.12 ASI[3] RADIO[3] AIN5	Digital I/O Digital I/O Digital I/O Analog input	General purpose I/O TAMPC active shield 3 input RADIO DFEGPIO Analog input
28	P1.13 RADIO[4] AIN6	Digital I/O Digital I/O Analog input	General purpose I/O RADIO DFEGPIO Analog input
29	P1.08 EXTREF	Digital I/O Digital I/O Analog input	General purpose I/O GRTC CLKOUTFAST External reference for SAADC
30	P0.03	Digital I/O Digital I/O	General purpose I/O GRTC PWM
31	P0.02	Digital I/O	General purpose I/O
32	P1.03 NFC2	Digital I/O NFC input	General purpose I/O NFC antenna connection
33	P1.02 NFC1	Digital I/O NFC input	General purpose I/O NFC antenna connection

Copyright 2026 KAGA FEI Co., Ltd.

Downloaded from Arrow.com.

Pin	Pin name	Pin function	Description
34	P2.00	Digital I/O Digital I/O Digital I/O Digital I/O Digital I/O	General purpose I/O SPIM DCX UARTE RXD FLPR.4 QSPI D3
35	P2.01	Digital I/O Digital I/O Digital I/O Digital I/O Digital I/O	General purpose I/O SPIM SCK SPIS SCK FLPR.0 QSPI SCK
36	P2.02	Digital I/O Digital I/O Digital I/O Digital I/O Digital I/O Digital I/O	General purpose I/O SPIM SDO SPIS SDO UARTE TXD FLPR.1 QSPI D0
37	P2.04	Digital I/O Digital I/O Digital I/O Digital I/O Digital I/O Digital I/O	General purpose I/O SPIM SDI SPIS SDI UARTE CTS FLPR.2 QSPI D1
38	P2.06 TRACECLK	Digital I/O Digital I/O Digital I/O Digital I/O Digital I/O	General purpose I/O FLPR.6 SPIM SCK SPIS SCK Trace clock
39	P2.08 TRACEDATA[1]	Digital I/O Digital I/O Digital I/O Digital I/O Digital I/O Digital I/O	General purpose I/O FLPR.8 Trace data SPIM SDO SPIS SDO UARTE TXD
40	P2.09 TRACEDATA[2]	Digital I/O Digital I/O Digital I/O Digital I/O Digital I/O Digital I/O	General purpose I/O FLPR.9 Trace data SPIM SDI SPIS SDI UARTE CTS
41	P0.04	Digital I/O Digital I/O	General purpose I/O GRTC CLKOUT32K
42 to 47	GND	Ground	Ground pin. (0 V)

Copyright 2026 KAGA FEI Co., Ltd.

Downloaded from Arrow.com.

8.Handling Precaution

This specification describes desire and conditions especially for mounting.

Desire/Conditions

8.1.Environment conditions for use and storage

1. Store the components in an environment of < **40deg-C/90%RH** if they are in a moisture barrier bag packed by KAGA FEI.
2. Keep the factory ambient conditions at < **30deg-C/60%RH** .
3. Store the components in an environment of < **25±5deg-C/10%RH** after the bag is opened. (The condition is also applied to a stay in the manufacture process).

8.2.Conditions for handling of products

Make sure all of the moisture barrier bags have no holes, cracks or damages at receiving. If an abnormality is found on the bag, its moisture level must be checked in accordance with 2 in 8.2.

Refer to the label on the bag.

1. **All** of the surface mounting process (reflow process) must be completed **in 12 months** from the bag seal date.
2. Make sure humidity in the bag is less than **10%RH** immediately after open, using a humidity indicator card sealed with the components.
3. **All** of the surface mounting process (reflow process including rework process) must be completed in **168 hours** after the bag is opened (inclusive of any other processes).
4. If any conditions in 8.1 or condition 2 and 3 in 8.2 are not met, they may be baked according **IPC/JEDEC J-STD- 033B (Bake@125deg-C, Package Body:Thickness≤1.4 mm, Level3)**. Do not bake components in reel form.
5. As a rule, baking the components in accordance with conditions 4 in 8.2 shall be once, and all assembly operations (including rework and reflow) must be completed within the time specified in section with 3 in 8.2.
6. Since semi-conductors are inside of the components, they must be free from static electricity while handled. (<100V) Use ESD protective floor mats, wrist straps, ESD protective footwear, air ionizers etc., if necessary.
7. Please make sure that there are lessen mechanical vibration and shock for this module, and do not drop it.
8. Please recognize pads of back side at surface mount.
9. Washing the module is not recommended. If washing cannot be avoided, please test module functionality and performance after thoroughly drying the module. We cannot be held responsible for any failure due washing the module.

Copyright 2026 KAGA FEI Co., Ltd.

Downloaded from Arrow.com.

10. Please perform temperature conditions of module at reflow within the limits of the following. Please give the number of times of reflow as a maximum of 2 times.

Recommented Reflow Profile

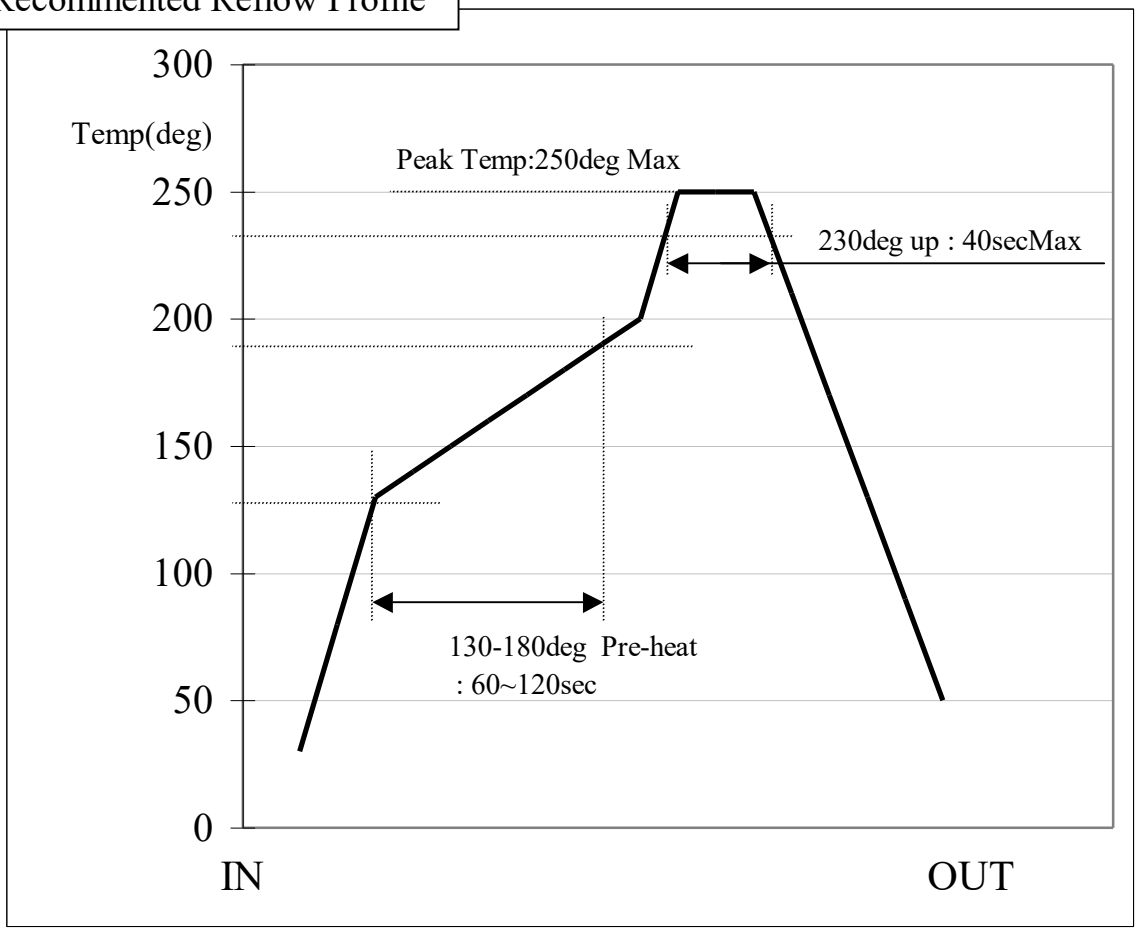

Copyright 2026 KAGA FEI Co., Ltd.

Downloaded from Arrow.com.

9.Packaging Specification

9.1.Packaging Specification

(1) Packaging Material

Name	Outline	Materials
Emboss	24 ㎜ wide - 12 ㎜ Pitch	Couductive PS
Cover Tape	-	-
Reel	φ330 ㎜	Couductive PS
Desiccant	30g×1	-
Humidity indicator card	-	-
Aluminum moisture barrier bag	420×460（㎜）	(AS)PET/AL/NY/PE(AS)
Label	-	-
Corrugated cardboard box(Inner)	339×351×74（㎜）	-
Corrugated cardboard box(Outer)	369×369×277(㎜）	-

(2) Packaging Unit

Max 1,000 pieces/Reel Max 3,000 pieces/Box(Outer)

(3) Packing Figure

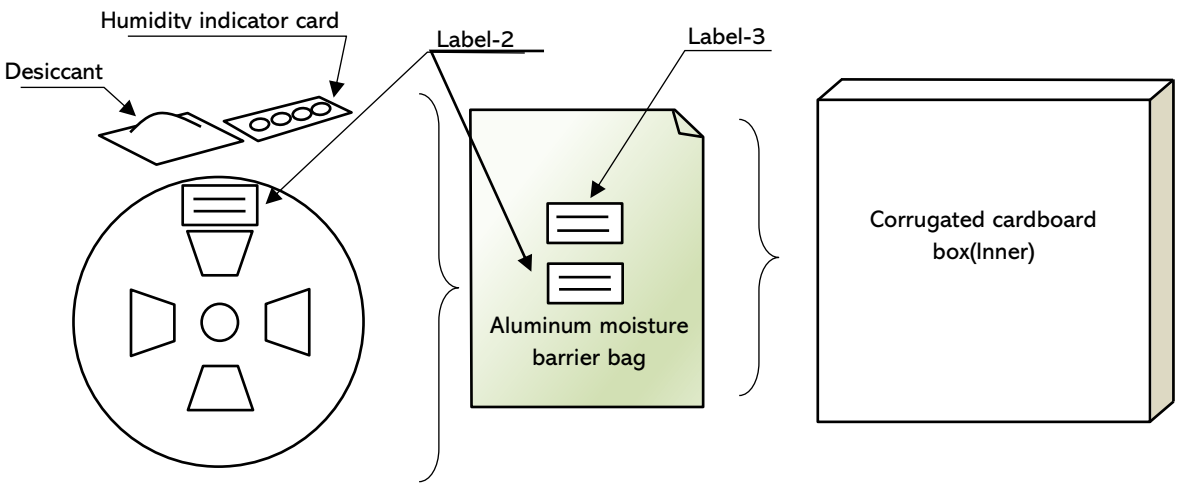

Copyright 2026 KAGA FEI Co., Ltd.

Downloaded from Arrow.com.

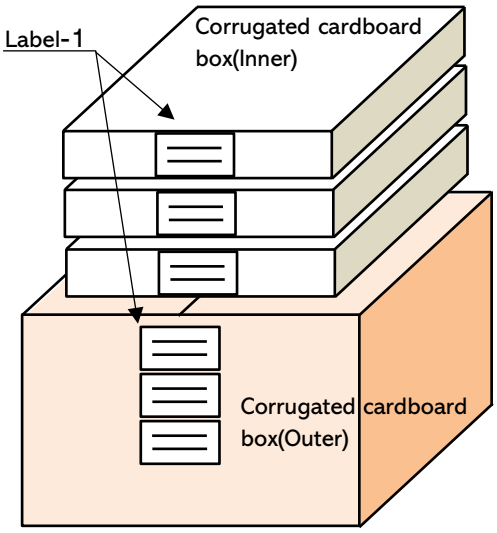

(4) Label

Label-1
- Purchase order
- Part No.
- Quantity
- Lot No.
- Country of origin

Label-2
- Serial No.
- Part No.
- Quantity
- Country of origin

Label-3
- Caution label
- MSL Level3

9.2.Tape specification

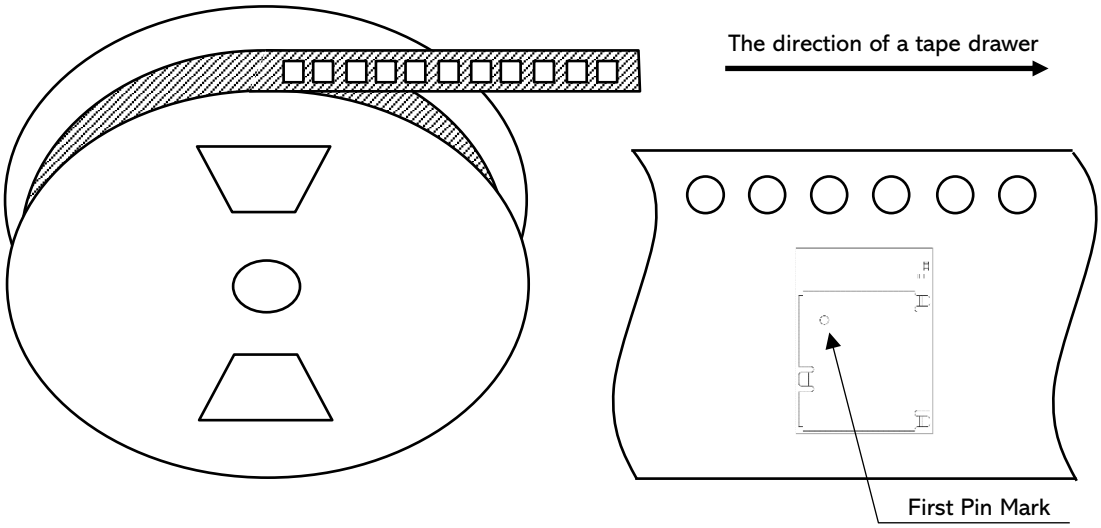

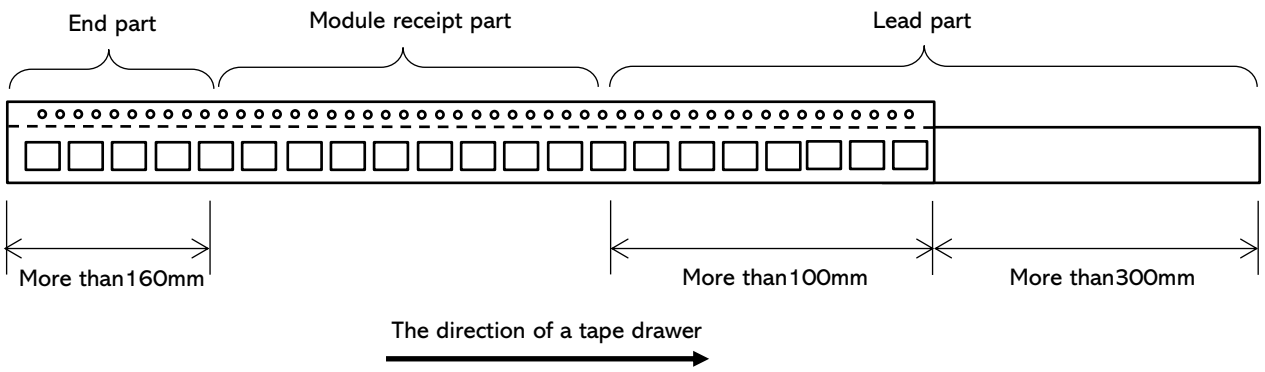

Copyright 2026 KAGA FEI Co., Ltd.

Downloaded from Arrow.com.

Emboss carrier tape drawing

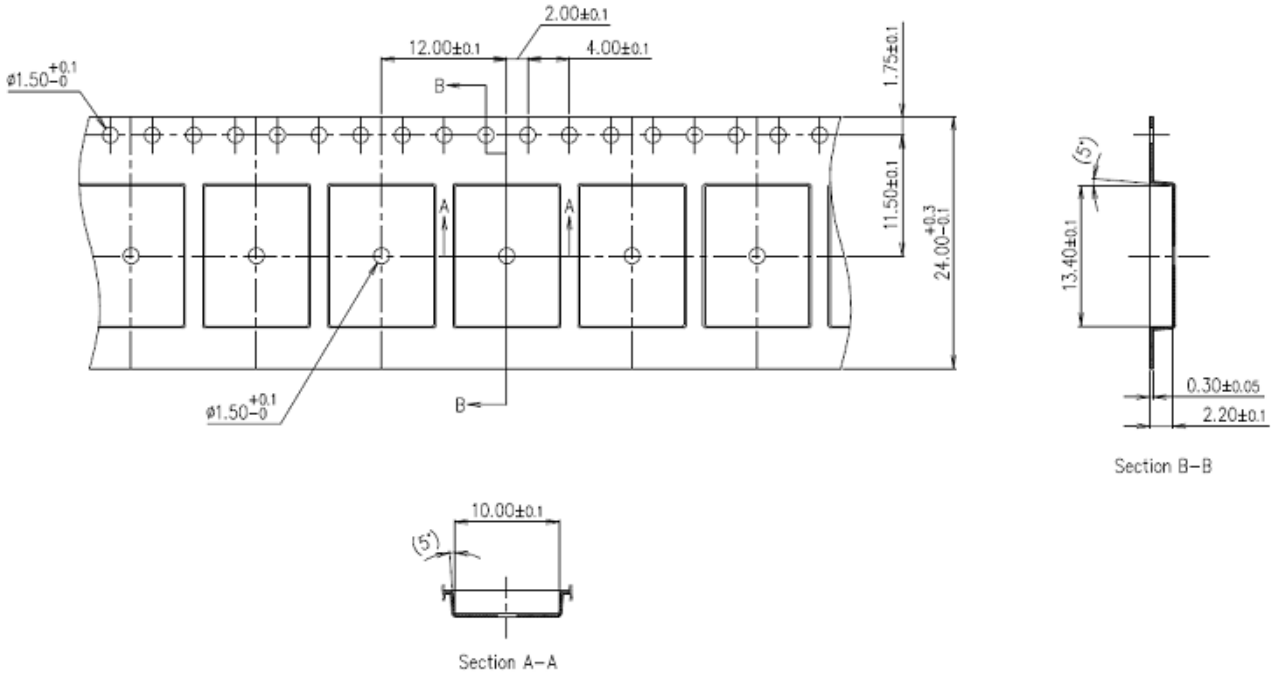

9.3.Reel specification

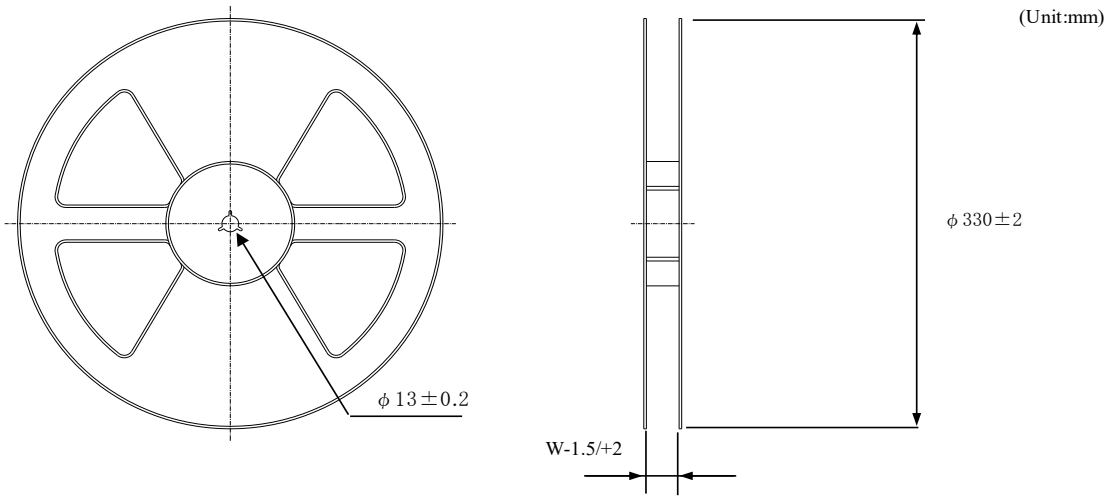

Tape wide	8mm	12mm	16mm	24mm	32mm	44mm
W	9.4mm	13.4mm	17.4mm	25.4mm	33.4mm	45.4mm

Copyright 2026 KAGA FEI Co., Ltd.

Downloaded from Arrow.com.

9.4.Taping performance

Both of an embossing tape top cover tape bear this, when the power of 10N is applied in the direction of a drawer.

The exfoliation adhesion of a top cover tape is the intensity of 0.1~1.3N.
(The angle to pull is 165~180 degrees. The speed to pull is 300 mm/min)

Note

Lack of the parts in 1 reel is with two or less pieces.

MSL Level 3 Under control

Copyright 2026 KAGA FEI Co., Ltd.

Downloaded from Arrow.com.

10.Antenna application note

10.1.Recommended module mounting example

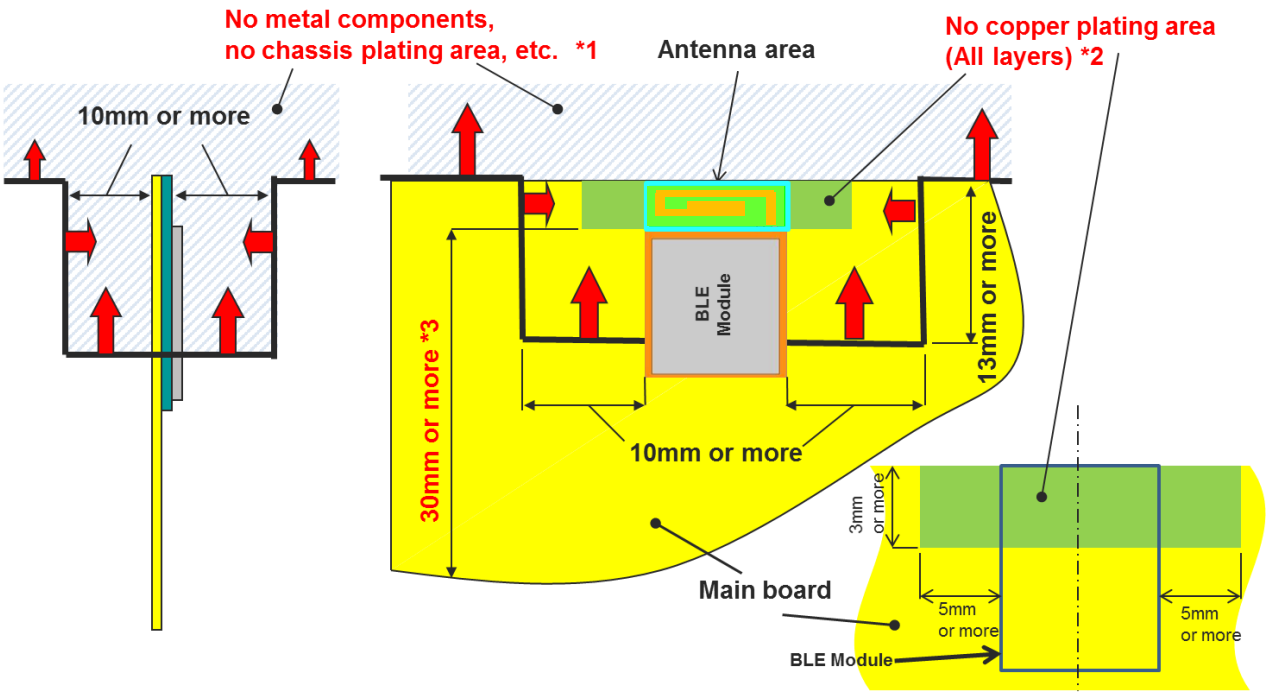

*1 Please do not place any metal components in blue shaded space.*1) We do not recommend placing any metal objects upper space of the module in the above figure. If it needs to place metal objects, please consider keeping the metal off from the antenna as far as you can. Such as signal line and metal chassis as possible except for main board while mounting the components in *1 space on the main board is allowed except for no copper plating area. (*2).

*2 This area is routing prohibited area on the main board. Please do not place copper on any layer. Please remain use of FR-4 dielectric material. The antenna is tuned with the FR-4.

*3 Characteristics may deteriorate when GND pattern length is less than 30mm. It should be 30 mm or more as possible.

Even when above mentioned condition is satisfied, communication performance may be significantly deteriorated depending on the structure of the product.

Copyright 2026 KAGA FEI Co., Ltd.

Downloaded from Arrow.com.

10.2.Other module mounting examples

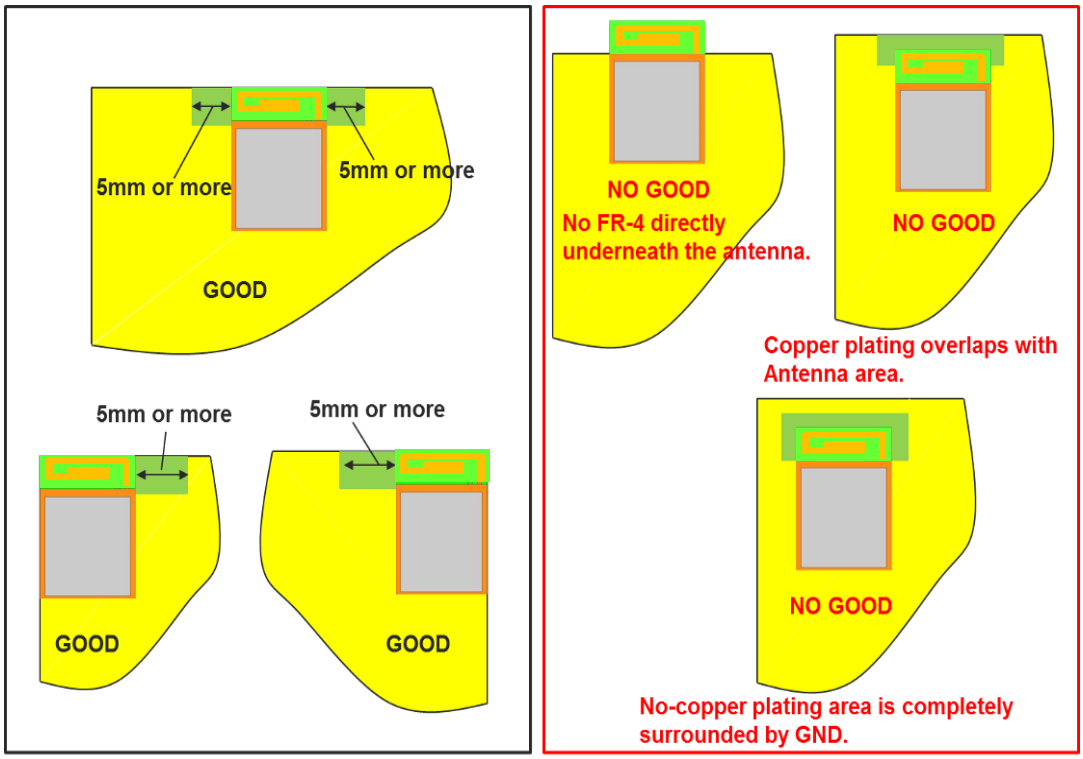

10.3.Placement of resin or plastic parts

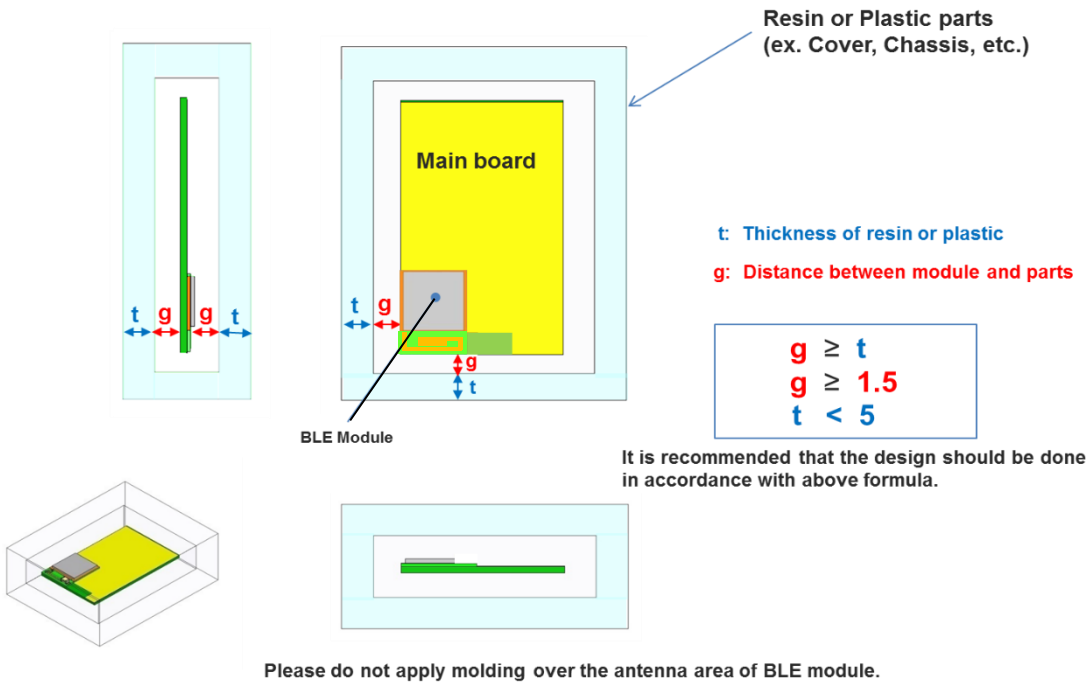

Copyright 2026 KAGA FEI Co., Ltd.

Downloaded from Arrow.com.

10.4.Directional characteristics example (when mounted on evaluation board)

Measurement data of antenna

Appearance and coordinates definition

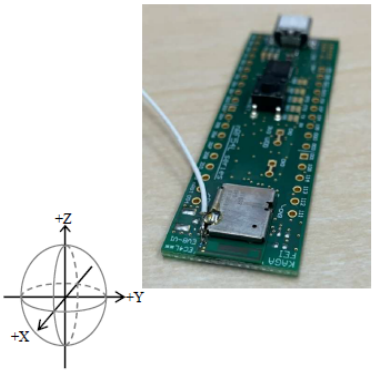

Frequency	[MHz]	@2400	@2440	@2480
Peak gain		[dBi]		
3-plane	TX-H	-4.6	-3.4	-2.9
	TX-V	-6.1	-4.9	-4.4
		-4.6	-3.4	-2.9
Average gain		[dBi]		
XY-plane	TX-H	-10.3	-8.8	-8.2
	TX-V	-25.2	-23.9	-23.4
	Plus(H,V)	-10.1	-8.6	-8.0
YZ-plane	TX-H	-21.2	-19.8	-19.3
	TX-V	-8.0	-6.8	-6.3
	Plus(H,V)	-7.8	-6.5	-6.1
XZ-plane	TX-H	-10.0	-8.7	-8.1
	TX-V	-17.6	-15.7	-14.7
	Plus(H,V)	-9.3	-7.9	-7.3
3plane	TX-H	-11.7	-10.3	-9.7
	TX-V	-12.3	-10.9	-10.4
		-9.0	-7.6	-7.1
Efficiency	[dB]	-8.9	-7.5	-6.9
VSWR	[:1]	3.9	2.4	1.5

*Note:The value is average value in 1 round of each inclination direction angle.

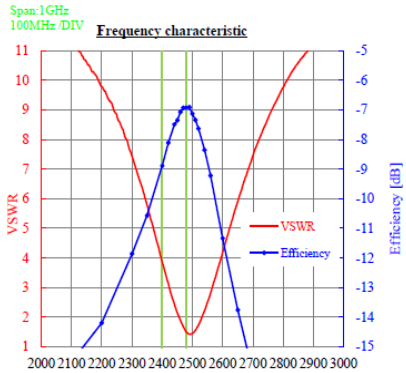

Radiation pattern

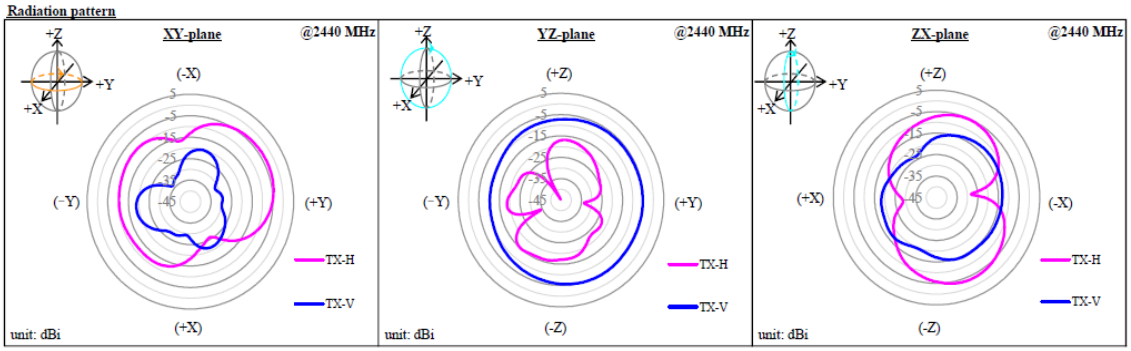

About this Application Note

・This Application Note has been prepared as a reference material to help obtaining the antenna performance mounted on Bluetooth® LE module better while it is not guaranteed or assured to obtain better communication performance and distance.
・This product "Bluetooth® LE module" has been certified and matching circuit constant for antenna within module cannot be changed when ambient environment condition changes. The product must be re-certified when matching circuit constant is changed.

Copyright 2026 KAGA FEI Co., Ltd.

Downloaded from Arrow.com.

11.Design guide

11.1.Power Up Sequence

VDD power supply rise time (0V to 1.7V) must not exceed 60ms.

11.2.Recommended Power Circuit

VDD is the main power supply (1.7 – 3.6V) for this module. In case of the power supply voltage fluctuation by the load change is large, the module may not function properly. If an external regulator is used, the load change characteristic should be good in order to keep stable voltage as possible when the current is change.

11.3.Battery operation

When using a small battery (e.g. CR2032), a large capacitor (e.g.100uF low leakage capacitor) should be placed near the battery. This will reduce the voltage drop especially when the module is operated at low temperatures.

11.4.Pattern Design Guide

11.4.1.Power Supply System

Power supply bypass capacitors should be placed close to the VDD pin of the module. The VDD trace should be greater than 0.5mm and a bigger a via diameter is recommended.

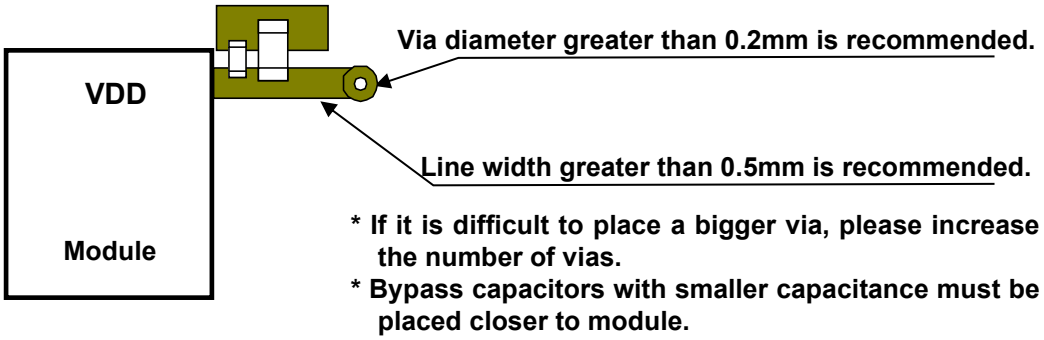

11.4.2.Bypass Capacitor Layout

A parallel combination of a small capacitance (about 10pF) and a large capacitance (1uF to 10uF) is recommended for bypass capacitors. The GND of the bypass capacitor must be placed close to an adjacent module GND to ensure the shortest closed loop.

11.4.3.GND Pattern

Power supply bypass capacitor GND should be placed in proximity of module GND. Wide GND area must be provided to ensure isolation for each layer.

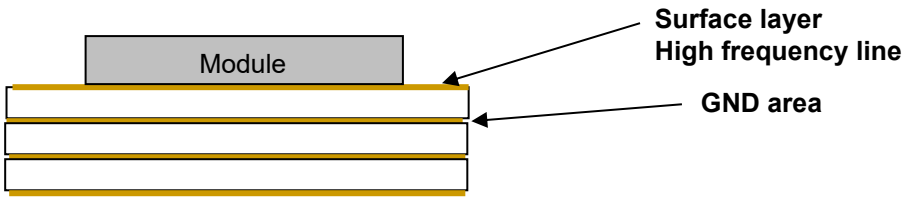

GND pattern of each layer should be connected to GND area with large number of via.

Copyright 2026 KAGA FEI Co., Ltd.

Downloaded from Arrow.com.

Precautions

■ Please conduct validation and verification of our products in actual condition of mounting and operating environment before using our products.

■ The products listed in this Specification are intended for use in general electronic equipment (e.g., AV equipment, OA equipment, home electric appliances, office equipment, information and communication equipment including, without limitation, mobile phone, and PC). Please be sure to contact KAGA FEI for further information before using the products for any equipment which may directly cause loss of human life or bodily injury (e.g., transportation equipment including, without limitation, automotive powertrain control system, train control system, and ship control system, traffic signal equipment, disaster prevention equipment, medical equipment classified as Class I, II or III by IMDRF, highly public information network equipment including, without limitation, telephone exchange, and base station).
Please do not incorporate our products into any equipment requiring high levels of safety and/or reliability (e.g., aerospace equipment, aviation equipment, medical equipment classified as Class IV by IMDRF, nuclear control equipment, undersea equipment, military equipment).
When our products are used even for high safety and/or reliability-required devices or circuits of general electronic equipment, it is strongly recommended to perform a thorough safety evaluation prior to use of our products and to install a protection circuit as necessary.
Please note that unless you obtain prior written consent of KAGA FEI, KAGA FEI shall not be in any way responsible for any damages incurred by you or third parties arising from use of the products listed in this Specification for any equipment requiring inquiry to KAGA FEI or prohibited for use by KAGA FEI as described above.

■ Information contained in this Specification is intended to convey examples of typical performances and/or applications of our products and is not intended to make any warranty with respect to the intellectual property rights or any other related rights of KAGA FEI or any third parties nor grant any license under such rights.

■ Please note that the scope of warranty for our products is limited to the delivered our products themselves and KAGA FEI shall not be in any way responsible for any damages resulting from a fault or defect in our products.

■ The contents of this Specification are applicable to our products which are purchased from our sales offices or authorized distributors (hereinafter “KAGA FEI’s official sales channel”). Please note that the contents of this specification are not applicable to our products purchased from any seller other than KAGA FEI’s official sales channel.

■ The contents of this Specification are applied in preference to any agreement between you and KAGA FEI or KAGA FEI's official sales channel (e.g., supply and purchase agreement, quality assurance agreement).

■ You will have deemed accepted the contents of this Specification upon usage of our products.

■ Caution for Export
Some of our products listed in this specification may require specific procedures for export according to "U.S. Export Administration Regulations" and other applicable regulations.

Copyright 2026 KAGA FEI Co., Ltd.

Downloaded from Arrow.com.