APPROVED: _____

DATE: _____ TITLE: _____

Rev	AWO #	Description	Date	Appr
-		RELEASED	3/8/17	
A		UPDATED DRAWING	10/17/18	HR/DH
B		UPDATED DIM.	3/13/20	AY/OC

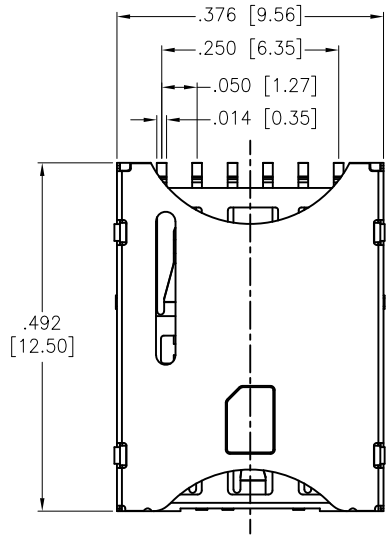

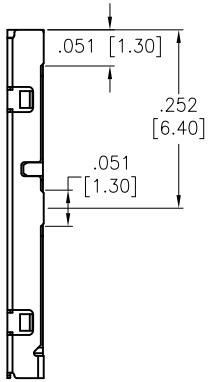

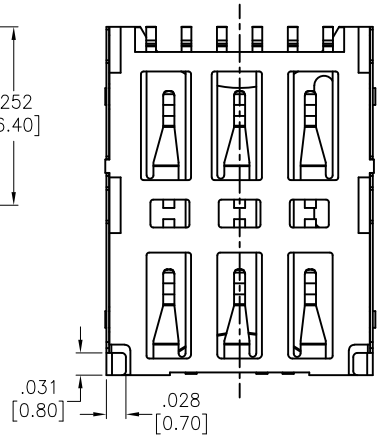

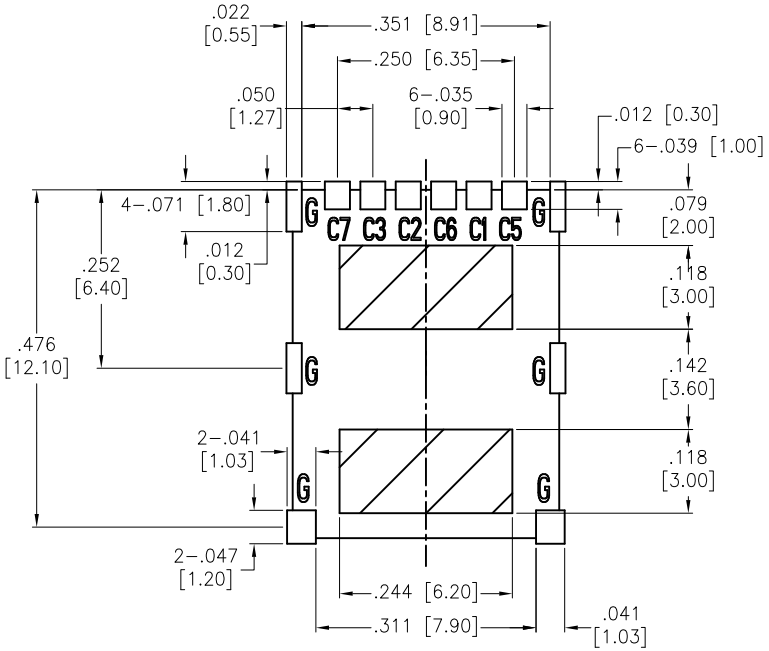

RECOMMENDED PCB LAYOUT

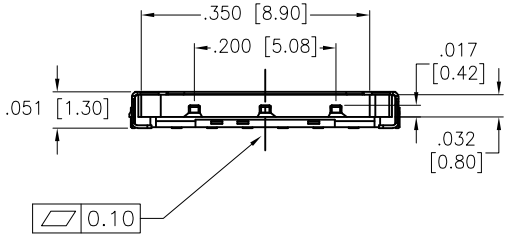

PIN NUMBER	PIN ASSIGNMENT
C1	Vcc
C2	RST
C3	CLK
C5	GND
C6	Vpp
C7	I/O

PACKAGED ON TAPE & REEL

SPECIFICATIONS:
Material:
Insulation: Hi-Temp Thermoplastic, UL94V-0
Insulation color: Black
Contact: Phosphor Bronze
Shell: Stainless Steel, Nickel plated, Gold plated on solder area
Plating:
10u" Gold over Nickel underplate on contact area,
Gold flash over Nickel underplate on solder tails
Environmental:
Lead free, RoHS compliant

RoHS COMPLIANT

UNLESS OTHERWISE SPECIFIED
ALL DIMENSIONS ARE INCHES [MM]
TOLERANCES: EXCEPT AS NOTED

INCHES		HOLES	
.X	± .10	Ø.X	±.10
.XX	± .020	Ø.XX	±.015
.XXX	± .015	Ø.XXX	±.010

APPROVALS		DATE
DRAWN	AY	3/8/17
CHECKED	CH	3/8/17
APPROVED		

ADAM TECH INTERCONNECTS
909 Rahway Avenue,
Union, NJ 07083
Phone: 908-687-5000
Fax: 908-687-5710

TITLE
NANO SIM CARD CONNECTOR, PUSH PULL
6 PIN, GOLD PLATED, SMT TYPE

SIZE	PART NO.	REV.
X	NSCC-A2-06-G-SMT-T/R	B

REF: S00275T | SCALE: NTS | SHEET 1 OF 1

Downloaded from Arrow.com.