MICRO SWITCH
A DIVISION OF MINNEAPOLIS-HONEYWELL REGULATOR COMPANY
FREEPORT, ILLINOIS
FED. MFR. CODE 91929

SWITCH—ENCLOSED

CATALOG LISTING
YZLN—2—RH

S

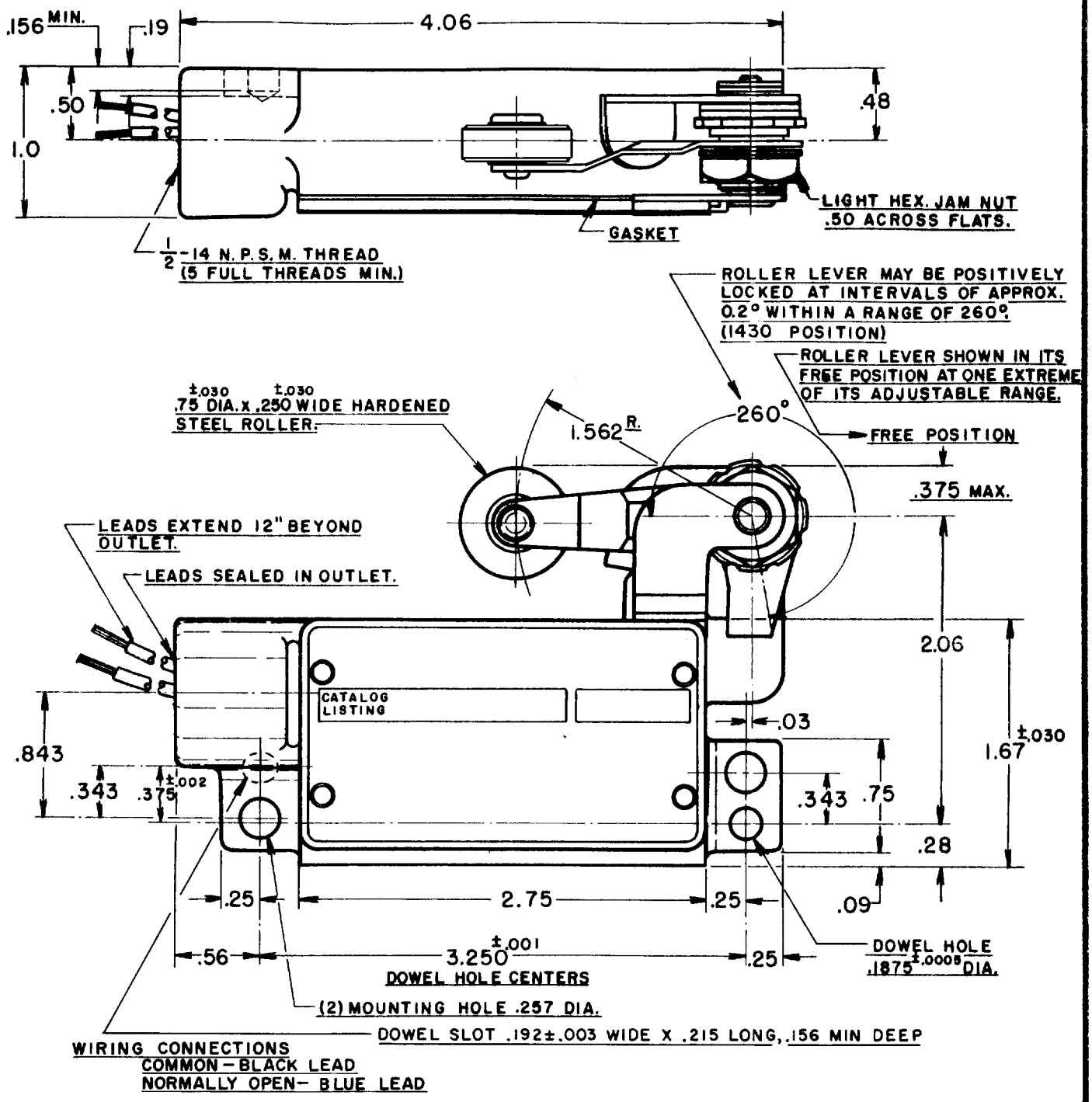

THIS DRAWING COVERS A PROPRIETARY ITEM AND IS THE PROPERTY OF MICRO SWITCH, A DIVISION OF HONEYWELL. THIS DRAWING IS NOT TO BE COPIED OR USED WITHOUT THE APPROVAL OF MICRO SWITCH.

CHARACTERISTICS

OPERATING FORCE — — — — — — 3 LB. MAX.

RELEASE FORCE — — — — — — 1/4 LB. MIN.

PRETRAVEL — — — — — — — (3°) .078 MAX.

DIFFERENTIAL TRAVEL — — (1/2°) .014 MAX.

OVERTRAVEL — — — — — (17°) .469 MIN.

ELECTRICAL DATA

CONTACT ARRANGEMENT
S. P. N. O.

-L96- 15 A-125, 250, OR 480 VAC
1/2 A-125 VDC; 1/4 A-250 VDC
1/8 HP-125 VAC; 1/4 HP-250 VAC

SCALE FULL

DO NOT SCALE PRINT

UNLESS OTHERWISE SPECIFIED
DIMENSIONS ARE IN INCHES

TOLERANCES ARE:

ONE PLACE	(.0)	±.030
TWO PLACE	(.00)	±.015
THREE PLACE	(.000)	±.005
ANGLES		±

WEIGHT .085 LB. PLUS LEADS

(M) YZLN-2 LH
ISSUE 5
REPLACES
RELEASE NO.
M YZLN-2-RH
DRAWING NUMBER
12
ISSUE

REVISIONS			
A	CO 8520	R.E.R. 19 OCT. 56	CHECK
B	C018546	V D F 14 NOV 63	R. S. C. 22 OCT. 56
C	C011950	D A W 27 OCT 64	
D	C021551	W E G 10 JUNE 66	CHECK
E	C050714	30 APR 82	56
F	C055988	M A M 31 OCT 84	G. C. M. 24 OCT. 56
G	C081513B	J A K 13 MAR 97	CHECK

FORMTEK
DRAWN R. E. R. 19 OCT. 56

Downloaded from Arrow.com.