Product datasheet

Specifications



Pilot light, plastic, red, Ø22, plain lens with integral LED, 24 V AC/DC

XB5AVB4

Main

Range of product	Harmony XB5
Product or component type	Pilot light
Device short name	XB5
Bezel material	Dark grey plastic
Fixing collar material	Plastic
Head type	Standard
Mounting diameter	22.5 mm
Sale per indivisible quantity	1
Shape of signaling unit head	Round
Cap/operator or lens colour	Red
Operator additional information	With plain lens
Light source	Universal LED
Bulb base	Integral LED
Light source colour	Red
[Us] rated supply voltage	24 V AC/DC at 50/60 Hz
Device presentation	Complete product

Complementary

Height	42 mm
Width	30 mm
Depth	54 mm
Terminals description ISO n°1	(X1-X2)PL
Net weight	0.038 kg
Resistance to high pressure washer	7000000 Pa at 55 °C, distance : 0.1 m
Connections - terminals	Screw clamp terminals, <= 2 x 1.5 mm² with cable end conforming to IEC 60947-1 Screw clamp terminals, 1 x 0.22...2 x 2.5 mm² without cable end conforming to IEC 60947-1
[Ui] rated insulation voltage	250 V (pollution degree 3) conforming to IEC 60947-1
[Uimp] rated impulse withstand voltage	4 kV conforming to IEC 60947-1
Signalling type	Steady
GCR BRIDGE	XB5AVCUST03
Compatibility code	XB5

Excluding VAT, FCA Jabal Ali & are subject to change – check with your local distributor.

Disclaimer: This documentation is not intended as a substitute for and is not to be used for determining suitability or reliability of these products for specific user applications

Downloaded from Arrow.com.

Supply voltage limits	19.2…30 V DC 21.6…26.4 V AC
Current consumption	18 mA
Service life	100000 h at rated voltage and 25 °C
Surge withstand	1 kV conforming to IEC 61000-4-5

Environment

Protective treatment	TH
Ambient air temperature for storage	-40…70 °C
Ambient air temperature for operation	-40…70 °C
Overvoltage category	Class II conforming to IEC 60536
IP degree of protection	IP66 conforming to IEC 60529 IP67 conforming to IEC 60529 IP69 conforming to IEC 60529 IP69K conforming to ISO 20653
Enclosure Type	UL type 4X/13
IK degree of protection	IK05 conforming to IEC 50102
Standards	UL 508 IEC 60947-1 IEC 60947-5-1 CSA C22.2 No 14 JIS C8201-5-1 IEC 60947-5-4 JIS C8201-1
Product certifications	CSA UL listed
Vibration resistance	5 gn (f= 12…500 Hz) conforming to IEC 60068-2-6
Shock resistance	50 gn (duration = 18 ms) for half sine wave acceleration conforming to IEC 60068-2-27 30 gn (duration = 11 ms) for half sine wave acceleration conforming to IEC 60068-2-27
Resistance to fast transients	2 kV conforming to IEC 61000-4-4
Resistance to electromagnetic fields	10 V/m conforming to IEC 61000-4-3
Electromagnetic compatibility	Electrostatic discharge - test level: 6 kV (on contact (on metal parts)) conforming to IEC 61000-4-2 Electrostatic discharge - test level: 8 kV (in free air (in insulating parts)) conforming to IEC 61000-4-2 Electromagnetic emission class B conforming to IEC 55011
Resistance to electrostatic discharge	6 kV on contact (on metal parts) conforming to IEC 61000-4-2 8 kV in free air (in insulating parts) conforming to IEC 61000-4-2
Electromagnetic emission	Class B conforming to IEC 55011

Packing Units

Unit Type of Package 1	PCE
Number of Units in Package 1	1
Package 1 Height	3.500 cm
Package 1 Width	5.500 cm
Package 1 Length	8.500 cm
Package 1 Weight	35.300 g
Unit Type of Package 2	S03

Downloaded from Arrow.com.

Number of Units in Package 2	150
Package 2 Height	30.000 cm
Package 2 Width	30.000 cm
Package 2 Length	40.000 cm
Package 2 Weight	5.762 kg
Unit Type of Package 3	P06
Number of Units in Package 3	1200
Package 3 Height	75.000 cm
Package 3 Width	80.000 cm
Package 3 Length	60.000 cm
Package 3 Weight	54.096 kg

Contractual warranty

Warranty (in months)	18

Downloaded from Arrow.com.

Environmental Data

Schneider Electric aims to achieve Net Zero status by 2050 through supply chain partnerships, lower impact materials, and circularity via our ongoing “Use Better, Use Longer, Use Again” campaign to extend product lifetimes and recyclability.

Environmental Data explained >

How we assess product sustainability >

Environmental footprint

Total lifecycle Carbon footprint	**0.8 kg CO2 eq.**
Carbon footprint of the manufacturing phase [A1 to A3]	**0.3 kg CO2 eq.**
Carbon footprint of the distribution phase [A4]	**0 kg CO2 eq.**
Carbon footprint of the installation phase [A5]	**0 kg CO2 eq.**
Carbon footprint of the use phase [B2, B3, B4, B6]	**0.4 kg CO2 eq.**
Carbon footprint of the end-of-life phase [C1 to C4]	**0.1 kg CO2 eq.**
Environmental Disclosure	Product Environmental Profile

Use Better

Materials and Substances

Average percentage of recycled plastic content	**21 %**
Average percentage of recycled metal content	**7 %**
Packaging made with recycled cardboard	**Yes**
Packaging without single use plastic	**Yes**
SCIP Number	**3d14fd98-3859-4733-a5ee-a3016769973c**
EU RoHS Directive	Compliant By Exemption
REACh Regulation	Reference contains Substances of Very High Concern above the threshold

Use Longer

Lifetime extension

Product repair index	**A**

Use Again

Repack and remanufacture

Recyclability potential, in %	**22**
End of life manual availability	End of Life Information
Take-back	**No**
WEEE Label	**The product must be disposed on European Union markets following specific waste collection and never end up in rubbish bins**

Downloaded from Arrow.com.

Dimensions Drawings

Dimensions

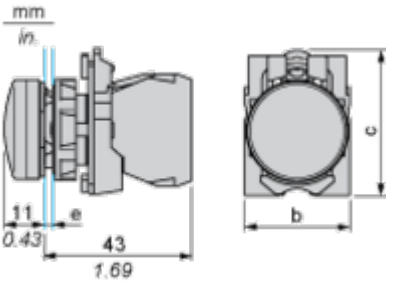

e: clamping thickness: 1 to 6 mm / 0.04 to 0.24 in.
b: 30 mm / 1.18 in.
c: 41.5 mm / 1.63 in.

Downloaded from Arrow.com.

Mounting and Clearance

Panel Cut-out for Pushbuttons, Switches and Pilot Lights (Finished Holes, Ready for Installation)

Connection by Screw Clamp Terminals or Plug-in Connectors or on Printed Circuit Board

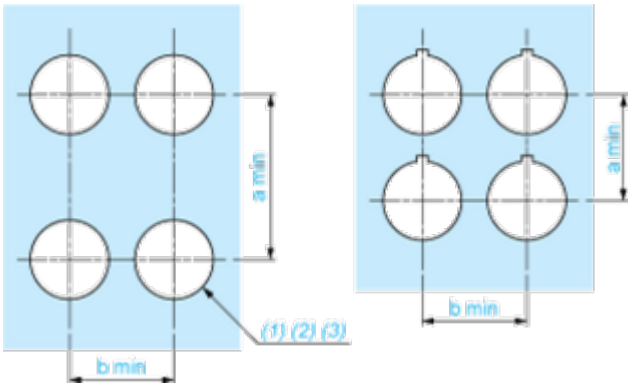

(1) Diameter on finished panel or support
(2) For selector switches and Emergency stop buttons, use of an anti-rotation plate type ZB5AZ902 is recommended.
(3) Ø22.5 mm recommended (Ø22.3 $_{0}^{+0.4}$) / Ø0.89 in. recommended (Ø0.88 in. $_{0}^{+0.016}$)

Connections	a in mm	a in in.	b in mm	b in in.
By screw clamp terminals or plug-in connector	40	1.57	30	1.18
By Faston connectors	45	1.77	32	1.26
On printed circuit board	30	1.18	30	1.18

Detail of Lug Recess

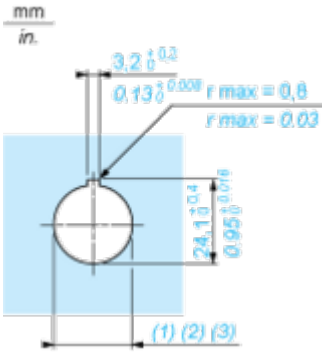

(1) Diameter on finished panel or support
(2) For selector switches and Emergency stop buttons, use of an anti-rotation plate type ZB5AZ902 is recommended.
(3) Ø22.5 mm recommended (Ø22.3 $_{0}^{+0.4}$) / Ø0.89 in. recommended (Ø0.88 in. $_{0}^{+0.016}$)

Downloaded from Arrow.com.

Image of product / Alternate images

Alternative

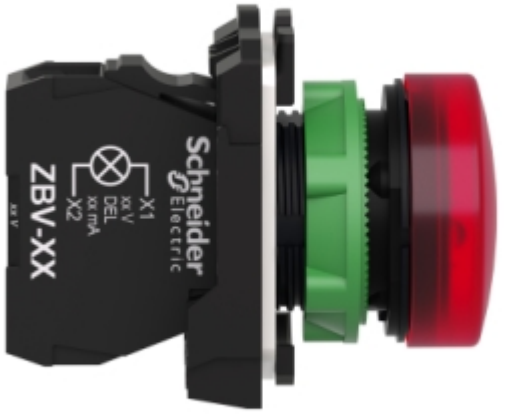



Downloaded from Arrow.com.

Product datasheet XB5AVB4





Downloaded from Arrow.com.





Downloaded from Arrow.com.

Image of product in real life situation



Downloaded from Arrow.com.