XCL100/XCL101 Series

ETR28004-007

Inductor Built-in Step-up “micro DC/DC” Converter

☆Green Operation Compatible

■GENERAL DESCRIPTION

The XCL100/XCL101 series is a synchronous step-up micro DC/DC converter which integrates an inductor and a control IC in one tiny package (2.5mm×2.0mm, h=1.04mm). A stable step-up power supply is configured using only two capacitors connected externally. An internal coil simplifies the circuit and enables minimization of noise and other operational trouble due to the circuit wiring.

The XCL100/XCL101 series can be used in applications that start from a single alkaline or nickel-metal hydride battery because the input voltage range is 0.7V ~ 5.5V. The output voltage can be set from 1.8V to 5.0V (±2.0%) in steps of 0.1V. PFM control enables a low quiescent current, making these products ideal for portable devices that require high efficiency.

The XCL100/XCL101 features a load disconnect function to break continuity between the input and output at shutdown (A,B Type), and a bypass mode function to maintain continuity between the input and output (C Type).

■APPLICATIONS

- ●Wearable devices
- ●Mobile phones, Smart phones
- ●Mouses, Keyboards
- ●Remote controls
- ●Portable information devices
- ●Game consoles

■FEATURES

Input Voltage Range	:	Operating hold voltage 0.7V~5.5V
		Start-up voltage 0.9V~5.5V
Output Voltage Range	:	XCL100 3.0V ~ 5.0V (±2.0%)
		XCL101 1.8V ~ 5.0V (±2.0%)
Output Current	:	80mA@V_{OUT}=3.3V, V_{BAT}=1.8V
Supply Current	:	6.3μA (V_{BAT}=V_{OUT}+0.5V)
Control Method	:	PFM Control
PFM Switching Current	:	350mA
Functions	:	Load Disconnection or Bypass Mode C_L Discharge
Output Capacitor	:	Ceramic Capacitor Compatible
Operating Ambient Temperature	:	-40°C ~ 85°C
Package	:	CL-2025-02
Environmentally Friendly	:	EU RoHS Compliant, Pb Free

■TYPICAL APPLICATION CIRCUIT

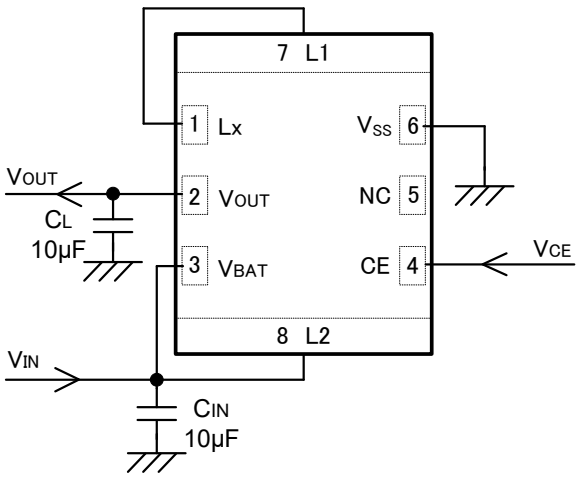

(TOP VIEW)

“L1 and Lx”, “L2 and V_{BAT}” is connected by PCB pattern.

■ TYPICAL PERFORMANCE CHARACTERISTICS

XCL101C501BR-G

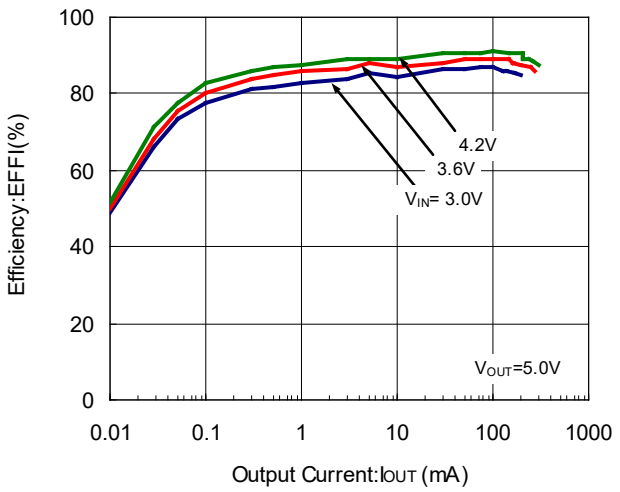

Downloaded from Arrow.com.

■BLOCK DIAGRAM

XCL101A/XCL101C Type

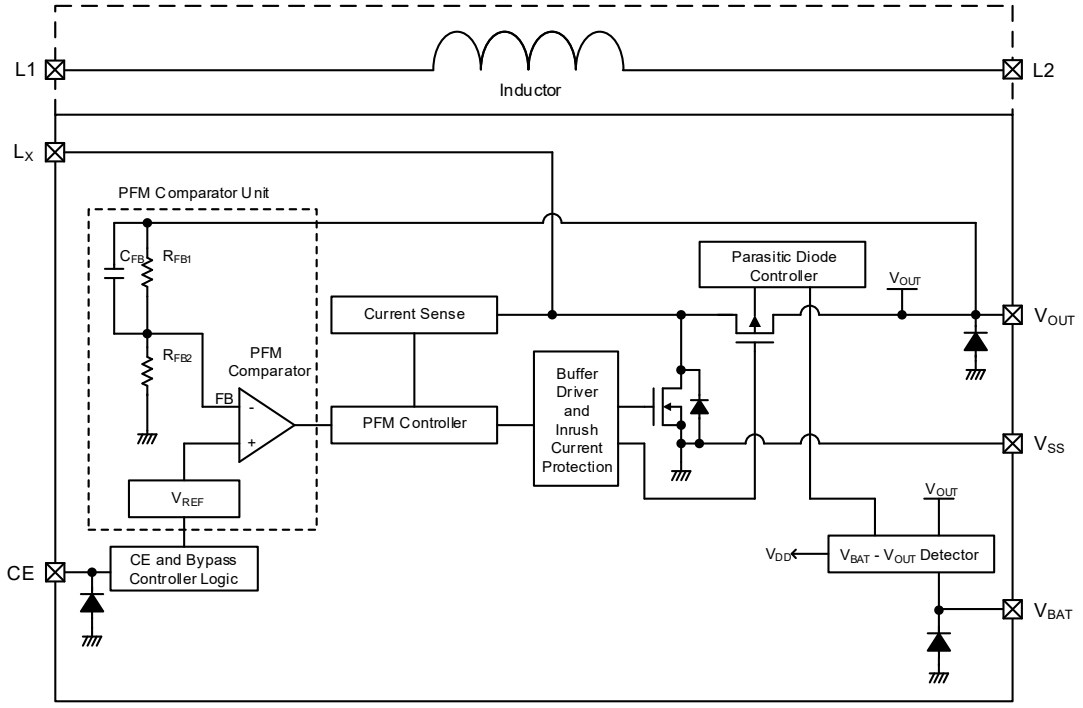

* Diodes inside the circuits are ESD protection diodes and parasitic diodes.

XCL101B Type

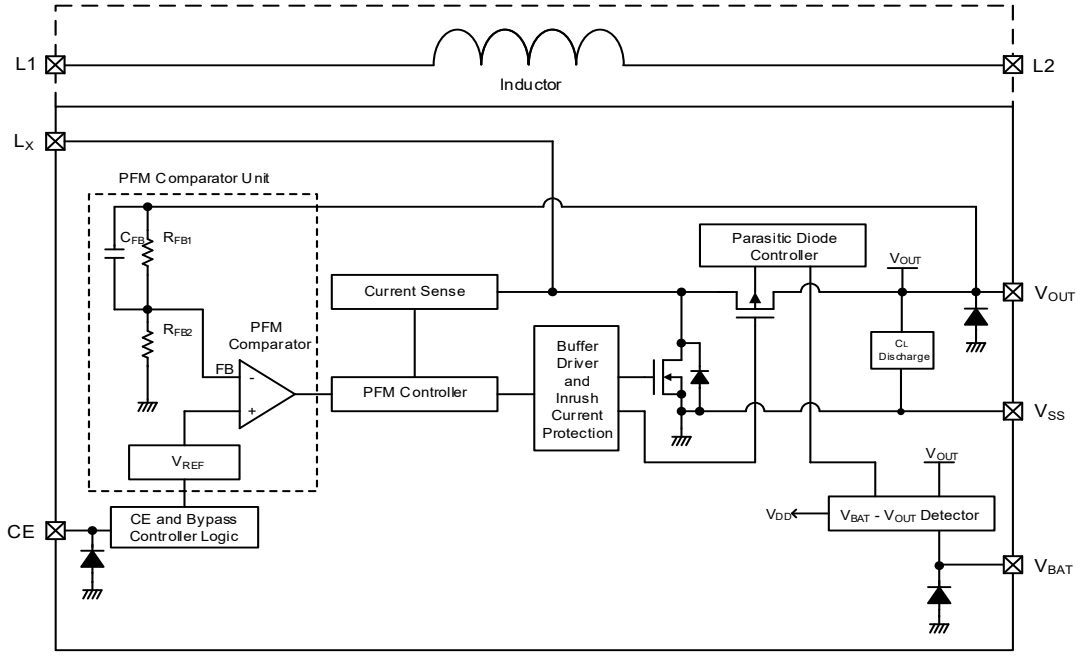

* Diodes inside the circuits are ESD protection diodes and parasitic diodes.

Downloaded from Arrow.com.

■BLOCK DIAGRAM

XCL100A/XCL100C Type

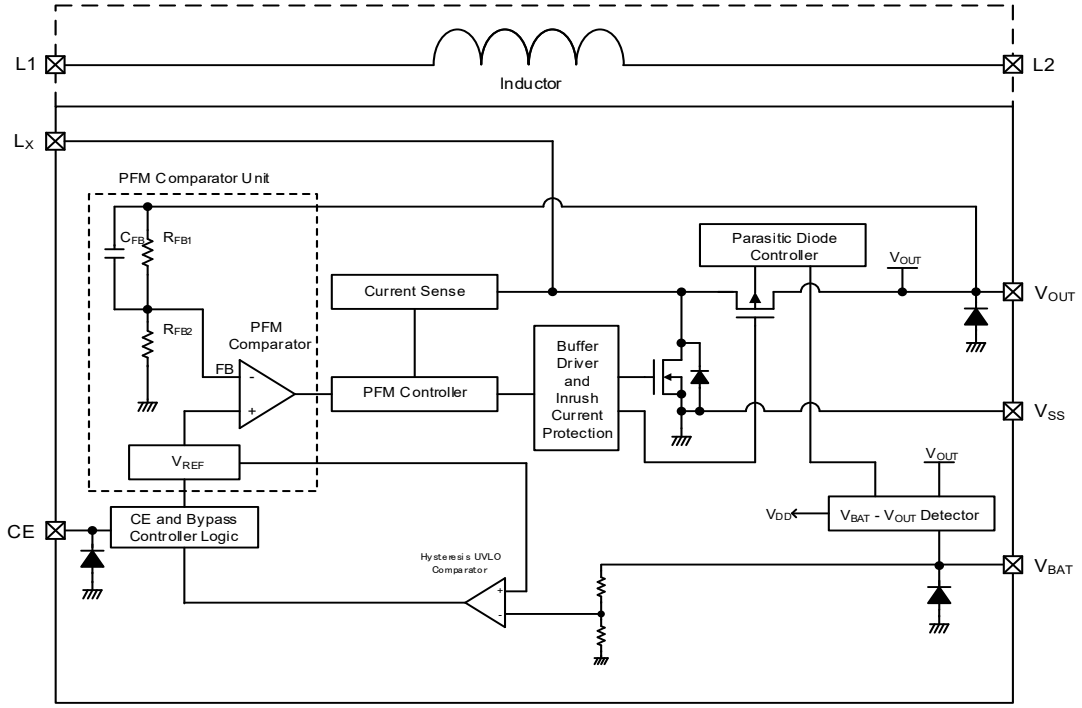

* Diodes inside the circuits are ESD protection diodes and parasitic diodes.

XCL100B Type

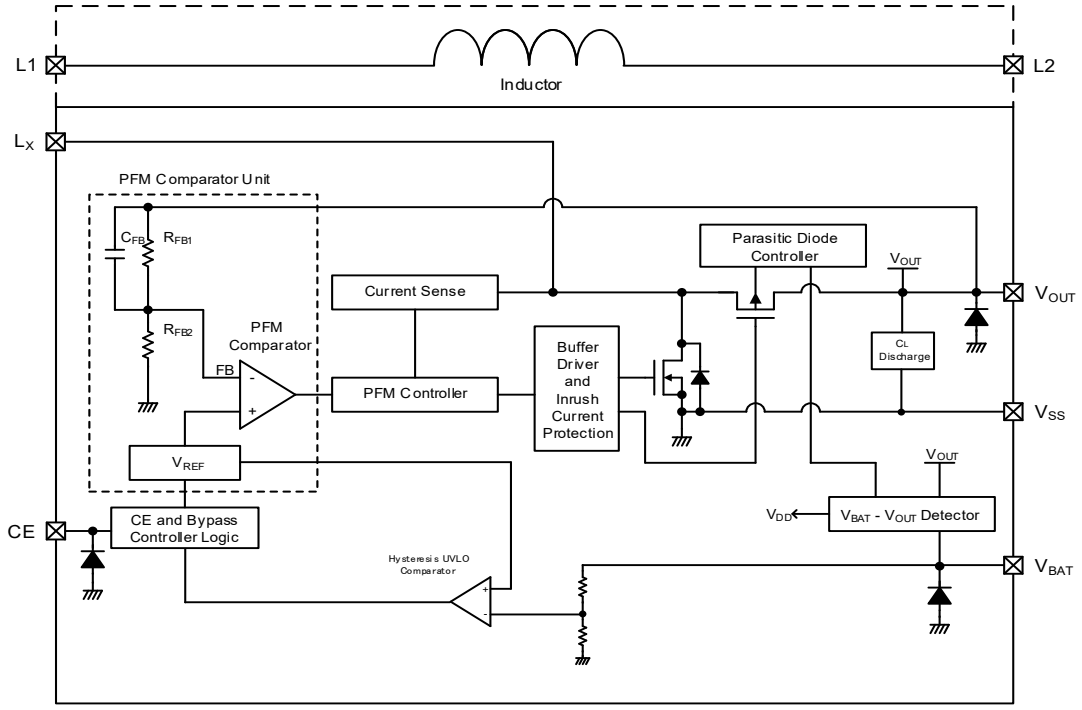

* Diodes inside the circuits are ESD protection diodes and parasitic diodes.

Downloaded from Arrow.com.

■PRODUCTION CLASSIFICATION

●Ordering Information

XCL100①②③④⑤⑥-⑦(*1) PFM control, With UVLO function

DESIGNATOR	ITEM	SYMBOL	DESCRIPTION
①	Product Type	A	Load Disconnection Without C_L Auto Discharge
		B	Load Disconnection With C_L Auto Discharge
		C	V_{BAT} Bypass Without C_L Auto Discharge
②③	Output Voltage	30 ~ 50	Output Voltage e.g. V_{OUT}=3.6V⇒②=3, ③=6
④(*2)	UVLO Function	1	UVLO Function V_{UVLO_R}=1.65V
⑤⑥-⑦	Packages (Order Unit)	ER-G	CL-2025-02 (3,000pcs/Reel)

(*1) The "-G" suffix denotes Halogen and Antimony free as well as being fully EU RoHS compliant.
(*2) Please contact our sales representatives for UVLO release voltage other than those listed above.
It can be set from 1.65V to 2.2V in 0.05V increments.

XCL101①②③④⑤⑥-⑦(*1) PFM control, Without UVLO function

DESIGNATOR	ITEM	SYMBOL	DESCRIPTION
①	Product Type	A	Load Disconnection Without C_L Auto Discharge
		B	Load Disconnection With C_L Auto Discharge
		C	V_{BAT} Bypass Without C_L Auto Discharge
②③	Output Voltage	18 ~ 50	Output Voltage e.g. V_{OUT}=3.6V⇒②=3, ③=6
④	UVLO Function	1	No UVLO
⑤⑥-⑦	Packages (Order Unit)	ER-G	CL-2025-02 (3,000pcs/Reel)

(*1) The "-G" suffix denotes Halogen and Antimony free as well as being fully EU RoHS compliant.

Downloaded from Arrow.com.

■PIN CONFIGURATION

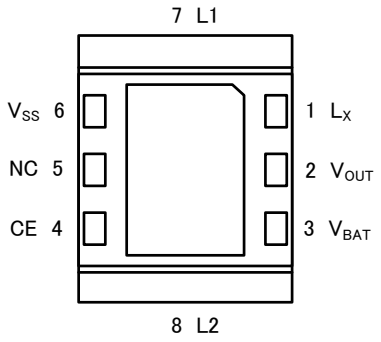

(BOTTOM VIEW)

* If the dissipation pad needs to be connected to other pins, it should be connected to the V_{SS} pin.
* Please refer to pattern layout page for the connecting to PCB.

■PIN ASSIGNMENT

PIN NUMBER	PIN NAME	FUNCTIONS
1	L_X	Switching
2	V_{OUT}	Output Voltage
3	V_{BAT}	Power Input
4	CE	Chip Enable
5	NC	No Connection
6	V_{SS}	Ground
7	L1	Inductor Electrodes
8	L2	

■CE PIN FUNCTION

PIN NAME	SIGNAL	STATUS
CE	H	Operation
	L	A,B Type : Stand-by C Type : Bypass Mode

* Please do not leave the CE pin open.

■ ABSOLUTE MAXIMUM RATINGS

Ta=25ºC

PARAMETER		SYMBOL	RATINGS	UNITS
V_{BAT} Pin Voltage		V_{BAT}	-0.3 ~ 7.0	V
L_X Pin Voltage		V_{LX}	-0.3 ~ V_{OUT} + 0.3 or 7.0 (*1)	V
V_{OUT} Pin Voltage		V_{OUT}	-0.3 ~ 7.0	V
CE Pin Voltage		V_{CE}	-0.3 ~ 7.0	V
L_X Pin Current		I_{LX}	700	mA
Power Dissipation		Pd	1000 (40mm x 40mm Standard Board) (*2)	mW
Operating Ambient Temperature		Topr	-40 ~ 85	℃
Storage Temperature	CL-2025-02	Tstg	-40 ~ 125	℃

All voltages are described based on the GND.
(*1) The maximum value should be either V_{OUT}+0.3V or 7.0V in the lowest.
(*2) The power dissipation figure shown is PCB mounted and is for reference only.
Please refer to PACKAGING INFORMATION for the mounting condition.

Downloaded from Arrow.com.

■ELECTRICAL CHARACTERISTICS

XCL101Axx1/ XCL101Bxx1

Ta=25 ºC

PARAMETER	SYMBOL	CONDITIONS	MIN.	TYP.	MAX.	UNITS	CIRCUIT
Input Voltage	V_{BAT}	-	-	-	5.5	V	-
Output Voltage	$V_{OUT(E)}$(*2)	V_{PULL}=1.5V, Voltage to start oscillation while V_{OUT} is decreasing	<E1>			V	①
Operation Start Voltage	V_{ST1}	I_{OUT}=1mA	-	-	0.9	V	②
Operation Hold Voltage	V_{HLD}	R_L=1kΩ	-	0.7	-	V	②
Supply Current	Iq	Oscillation stops, V_{BAT}=V_{CE}=1.5V V_{OUT}=$V_{OUT(T)}$ (*1) +0.5V	<E2>			μA	③
Input Pin Current	I_{BAT}	V_{OUT}=$V_{OUT(T)}$ (*1)+0.5V	-	0.25	1.0	μA	③
Stand-by Current	I_{STB}	V_{BAT}=V_{LX}=$V_{OUT(T)}$ (*1), V_{OUT}=V_{CE}=0V	-	0.1	1.0	μA	④
L_X Leak Current	I_{LXL}	V_{BAT}=V_{LX}=$V_{OUT(T)}$ (*1), V_{OUT}=V_{CE}=0V	-	0.1	1.0	μA	⑤
PFM Switching Current	I_{PFM}	I_{OUT}=3mA	295	350	405	mA	②
Maximum On Time	t_{ONMAX}	V_{PULL}=1.5V, V_{OUT}=$V_{OUT(T)}$ (*1)×0.98	3.1	4.6	6.0	μs	①
L_X SW "Pch" ON Resistance (*3)	R_{LXP}	V_{BAT}=V_{CE}=V_{LX}=$V_{OUT(E)}$ (*2)+ 0.5V, I_{OUT}=200mA	<E3>			Ω	⑦
L_X SW "Nch" ON Resistance (*4)	R_{LXN}	V_{BAT}=$V_{OUT(E)}$ (*2)=3.3V, V_{OUT}=1.7V	-	0.6	-	Ω	⑧
CE "H" Voltage	V_{CEH}	V_{BAT}=V_{PULL}=1.5V V_{OUT}=$V_{OUT(T)}$ (*1)×0.98 While V_{CE}= 0.3→0.75V, Voltage to start oscillation	0.75	-	5.5	V	①
CE "L" Voltage	V_{CEL}	V_{BAT}=V_{PULL}=1.5V V_{OUT}=$V_{OUT(T)}$ (*1)× 0.98 While V_{CE}=0.75 → 0.3V, Voltage to stop oscillation	V_{SS}	-	0.3	V	①
CE "H" Current	I_{CEH}	V_{BAT}=V_{CE}=V_{LX}=V_{OUT}=5.5V	-0.1	-	0.1	μA	①
CE "L" Current	I_{CEL}	V_{BAT}=V_{LX}=V_{OUT}=5.5V, V_{CE}=0V	-0.1	-	0.1	μA	①
CL Discharge Resistance (B Type)	R_{DCHG}	V_{BAT}=V_{OUT}=2.0V, V_{CE}=0V	165	210	254	Ω	③
Inductance Value	L	Test Frequency=1MHz	-	4.7	-	μH	-
(Inductor) Rated Current	I_{DC}	ΔT=+40℃	-	700	-	mA	-

Unless otherwise stated, V_{BAT}= V_{CE}= 1.5V

(*1) $V_{OUT(T)}$ =Nominal Output Voltage
(*2) $V_{OUT(E)}$ =Effective Output Voltage
The actual output voltage value $V_{OUT(E)}$ is the PFM comparator threshold voltage in the IC. Therefore, the DC/DC circuit output voltage, including the peripheral components, is boosted by the ripple voltage average value. Please refer to the characteristic example.
(*3) L_X SW "Pch" ON resistance =(V_{LX}-V_{OUT}pin measurement voltage) / 200mA
(*4) L_X SW "Nch" ONresistance measurement method is shown in the measurement circuit diagram.

Downloaded from Arrow.com.

■ELECTRICAL CHARACTERISTICS (Continued)

XCL101Cxx1

Ta=25 ºC

PARAMETER	SYMBOL	CONDITIONS	MIN.	TYP.	MAX.	UNITS	CIRCUIT
Input Voltage	V_{BAT}	-	-	-	5.5	V	-
Output Voltage	$V_{OUT(E)}$(*2)	V_{PULL}=1.5V, Voltage to start oscillation while V_{OUT} is decreasing	<E1>			V	①
Operation Start Voltage	V_{ST1}	I_{OUT}=1mA	-	-	0.9	V	②
Operation Hold Voltage	V_{HLD}	R_L=1kΩ	-	0.7	-	V	②
Supply Current	Iq	Oscillation stops, V_{OUT}=$V_{OUT(T)}$+0.5V (*1)	<E2>			μA	③
Input Pin Current	I_{BAT}	V_{BAT}=V_{CE}=1.5V, V_{OUT}=$V_{OUT(E)}$(*2)+0.5V	-	0.25	1.0	μA	③
Bypass Mode Current	I_{BYP}	V_{BAT}=V_{LX}=5.5V, V_{CE}=0V	-	3.5	6.1	μA	⑥
PFM Switching Current	I_{PFM}	I_{OUT}=3mA	295	350	405	mA	②
Maximum On Time	t_{ONMAX}	V_{PULL}=1.5V, V_{OUT}=$V_{OUT(T)}$(*1)×0.98	3.1	4.6	6.0	μs	①
L_X SW "Pch" ON Resistance (*3)	R_{LXP}	V_{BAT}=V_{LX}=V_{CE}=$V_{OUT(E)}$(*2)+ 0.5V, I_{OUT}=200mA	<E3>			Ω	⑦
L_X SW "Nch" ON Resistance (*4)	R_{LXN}	V_{BAT}=$V_{OUT(E)}$(*2)=3.3V, V_{OUT}=1.7V	-	0.6	-	Ω	⑧
CE "H" Voltage	V_{CEH}	V_{BAT}=V_{PULL}=1.5V V_{OUT}=$V_{OUT(T)}$(*1)×0.98 While V_{CE}=0.3→0.75V, Voltage to start oscillation	0.75	-	5.5	V	①
CE "L" Voltage	V_{CEL}	V_{BAT}=V_{PULL}=1.5V V_{OUT}=$V_{OUT(T)}$ (*1)× 0.98 While V_{CE}=0.75 → 0.3V, Voltage to stop oscillation	V_{SS}	-	0.3	V	①
CE "H" Current	I_{CEH}	V_{BAT}=V_{CE}=V_{LX}=V_{OUT}=5.5V	-0.1	-	0.1	μA	①
CE "L" Current	I_{CEL}	V_{BAT}=V_{LX}=V_{OUT}=5.5V, V_{CE}=0V	-0.1	-	0.1	μA	①
Inductance Value	L	Test Frequency=1MHz	-	4.7	-	μH	-
(Inductor) Rated Current	I_{DC}	ΔT=+40℃	-	700	-	mA	-

Unless otherwise stated, V_{BAT}= V_{CE}= 1.5V

(*1) $V_{OUT(T)}$ =Nominal Output Voltage
(*2) $V_{OUT(E)}$ =Effective Output Voltage
The actual output voltage value $V_{OUT(E)}$ is the PFM comparator threshold voltage in the IC. Therefore, the DC/DC circuit output voltage, including the peripheral components, is boosted by the ripple voltage average value. Please refer to the characteristic example.
(*3) L_X SW "Pch" ON resistance =(V_{LX}-V_{OUT}pin measurement voltage) / 200mA
(*4) L_X SW "Nch" ONresistance measurement method is shown in the measurement circuit diagram.

Downloaded from Arrow.com.

■ELECTRICAL CHARACTERISTICS (Continued)

XCL100Axxx/ XCL100Bxxx

Ta=25℃

PARAMETER	SYMBOL	CONDITIONS	MIN.	TYP.	MAX.	UNITS	CIRCUIT
Input Voltage	V_{BAT}				5.5	V	-
Output Voltage	$V_{OUT(E)}$ (*2)	V_{PULL}=1.5V, Voltage to start oscillation while V_{OUT} is decreasing	E9			V	①
Operation Start Voltage	V_{ST}	I_{OUT}=1mA	-	-	$V_{RELEASE(E)}$ (*6)	V	②
Operation Hold Voltage	V_{HLD}	R_L=1kΩ	$V_{DETECT(E)}$ (*7)	-	-	V	②
Supply Current2	Iq	Oscillation stops,V_{OUT}=$V_{OUT(T)}$+0.5V (*1)	E4			μA	③
Input Pin Current2	I_{BAT}	V_{OUT}=$V_{OUT(T)}$+0.5V (*1)	E5			μA	③
Stand-by Current	I_{STB}	V_{BAT}=V_{LX}=$V_{OUT(T)}$ (*1), V_{OUT}=V_{CE}=0V	-	0.1	1.0	μA	④
L_X Leak Current	I_{LXL}	V_{BAT}=V_{LX}=$V_{OUT(T)}$ (*1), V_{OUT}=V_{CE}=0V	-	0.1	1.0	μA	⑤
PFM Switching Current	I_{PFM}	I_{OUT}=3mA	295	350	405	mA	②
Maximum ON Time	t_{ONMAX}	V_{PULL}=$V_{RELEASE(T)}$+0.1V (*5), V_{OUT}=$V_{OUT(T)}$×0.98 (*1)	3.1	4.6	6.0	μs	①
L_X SW "Pch" ON Resistance(*3)	R_{LXP}	V_{BAT}=V_{LX}=V_{CE}=$V_{OUT(T)}$+0.5V (*1), I_{OUT}=200mA	E3			Ω	⑦
L_X SW "Nch" ON Resistance (*4)	R_{LXN}	V_{BAT}=V_{CE}=3.3V, V_{OUT}=1.7V	-	0.6	-	Ω	⑧
CE "H" Voltage	V_{CEH}	V_{BAT}=V_{PULL}=$V_{RELEASE(T)}$+0.1V (*5), V_{OUT}=$V_{OUT(T)}$×0.98 (*1) While V_{CE}=0.3→0.75V, Voltage to start oscillation	0.75	-	5.5	V	①
CE "L" Voltage	V_{CEL}	V_{BAT}=V_{PULL}=$V_{RELEASE(T)}$+0.1V (*5), V_{OUT}=$V_{OUT(T)}$×0.98 (*1) While V_{CE}=0.75→0.3V, Voltage to stop oscillation	V_{SS}	-	0.3	V	①
CE "H" Current	I_{CEH}	V_{BAT}=V_{CE}=V_{LX}=V_{OUT}=5.5V	-0.1	-	0.1	μA	①
CE "L" Current	I_{CEL}	V_{BAT}= V_{LX}=V_{OUT}=5.5V, V_{CE}=0V	-0.1	-	0.1	μA	①
CL Discharge Resistance (B Type)	R_{DCHG}	V_{BAT}=V_{OUT}=2.0V, V_{CE}=0V	165	210	254	Ω	③
UVLO Current	I_{DQ}	V_{BAT}=V_{CE}=$V_{DETECT(E)}$ - 0.1V(*7), I_{OUT}=0mA	E6			μA	②
UVLO Release Voltage	$V_{RELEASE(E)}$ (*6)	V_{PULL}=V_{OUT}=$V_{OUT(T)}$×0.98 (*1) ,V_{BAT}=V_{CE} Voltage to start oscillation while V_{BAT} is increasing	E7			V	①
UVLO Hysteresis Voltage	$V_{HYS(E)}$ (*8)	V_{PULL}=V_{OUT}=$V_{OUT(T)}$×0.98(*1), V_{BAT}=V_{CE} $V_{RELEASE(E)}$ -Voltage to stop oscillation while V_{BAT} is decreasing (*6)	0.1	0.15	0.2	V	①
Inductance Value	L	Test Frequency=1.0MHz	-	4.7	-	μH	-
(Inductor) Rated Current	I_{DC}	⊿T=+40℃	-	700	-	mA	-

Unless otherwise stated, V_{BAT}=V_{CE}= $V_{RELEASE(T)}$+0.1V (*5)

(*1) $V_{OUT(T)}$=Nominal Output Voltage

(*2) $V_{OUT(E)}$=Effective Output Voltage

The actual output voltage value $V_{OUT(E)}$ is the PFM comparator threshold voltage in the IC. Therefore, the DC/DC circuit output voltage, including the peripheral components, is boosted by the ripple voltage average value. Please refer to the characteristic example.

(*3) LX SW "Pch" ON resistance=(V_{LX}-V_{OUT} pin measurement voltage) / 200mA

(*4) The LX SW "Nch" ON resistance measurement method is shown in the measurement circuit diagram.

(*5) $V_{RELEASE(T)}$= Nominal UVLO release voltage

(*6) $V_{RELEASE(E)}$= Actual UVLO release voltage

(*7) $V_{DETECT(E)}$= $V_{RELEASE(E)}$ -$V_{HYS(E)}$= Actual UVLO detect voltage

(*8) $V_{HYS(E)}$= Actual UVLO hysteresis voltage

Downloaded from Arrow.com.

■ELECTRICAL CHARACTERISTICS (Continued)

XCL100Cxxx

Ta=25℃

PARAMETER	SYMBOL	CONDITIONS	MIN.	TYP.	MAX.	UNITS	CIRCUIT
Input Voltage	V_{BAT}				5.5	V	-
Output Voltage	$V_{OUT(E)}$ (*2)	V_{PULL}=1.5V, Voltage to start oscillation while V_{OUT} is decreasing	E9			V	①
Operation Start Voltage	V_{ST}	I_{OUT}=1mA	-	-	$V_{RELEASE(E)}$ (*6)	V	②
Operation Hold Voltage	V_{HLD}	R_L=1kΩ	$V_{DETECT(E)}$ (*7)	-	-	V	②
Supply Current2	Iq	Oscillation stops,V_{OUT}=$V_{OUT(T)}$+0.5V (*1)	E4			μA	③
Input Pin Current2	I_{BAT}	V_{OUT}=$V_{OUT(T)}$+0.5V (*1)	E5			μA	③
Bypass Mode Current	I_{BYP}	V_{BAT}=V_{LX}=5.5V, V_{CE}=0V	-	3.5	6.1	μA	⑥
PFM Switching Current	I_{PFM}	I_{OUT}=3mA	295	350	405	mA	②
Maximum ON Time	t_{ONMAX}	V_{PULL}=$V_{RELEASE(T)}$+0.1V (*5), V_{OUT}=$V_{OUT(T)}$×0.98 (*1)	3.1	4.6	6.0	μs	①
L_X SW "Pch" ON Resistance(*3)	R_{LXP}	V_{BAT}=V_{LX}=V_{CE}=$V_{OUT(T)}$+0.5V (*1), I_{OUT}=200mA	E3			Ω	⑦
L_X SW "Nch" ON Resistance (*4)	R_{LXN}	V_{BAT}=V_{CE}=3.3V, V_{OUT}=1.7V	-	0.6	-	Ω	⑧
CE "H" Voltage	V_{CEH}	V_{BAT}=V_{PULL}=$V_{RELEASE(T)}$+0.1V (*5), V_{OUT}=$V_{OUT(T)}$×0.98 (*1) While V_{CE}=0.3→0.75V, Voltage to start oscillation	0.75	-	5.5	V	①
CE "L" Voltage	V_{CEL}	V_{BAT}=V_{PULL}=$V_{RELEASE(T)}$+0.1V (*5), V_{OUT}=$V_{OUT(T)}$×0.98 (*1) While V_{CE}=0.75→0.3V, Voltage to stop oscillation	V_{SS}	-	0.3	V	①
CE "H" Current	I_{CEH}	V_{BAT}=V_{CE}=V_{LX}=V_{OUT}=5.5V	-0.1	-	0.1	μA	①
CE "L" Current	I_{CEL}	V_{BAT}= V_{LX}=V_{OUT}=5.5V, V_{CE}=0V	-0.1	-	0.1	μA	①
UVLO Current	I_{DQ}	V_{BAT}=V_{CE}=$V_{DETECT(E)}$ - 0.1V(*7), I_{OUT}=0mA	E6			μA	②
UVLO Release Voltage	$V_{RELEASE(E)}$ (*6)	V_{PULL}=V_{OUT}=$V_{OUT(T)}$×0.98 (*1) ,V_{BAT}=V_{CE} Voltage to start oscillation while V_{BAT} is increasing	E7			V	①
UVLO Hysteresis Voltage	$V_{HYS(E)}$ (*8)	V_{PULL}=V_{OUT}=$V_{OUT(T)}$×0.98(*1), V_{BAT}=V_{CE} $V_{RELEASE(E)}$ -Voltage to stop oscillation while V_{BAT} is decreasing (*6)	0.1	0.15	0.2	V	①
Inductance Value	L	Test Frequency=1.0MHz	-	4.7	-	μH	-
(Inductor) Rated Current	I_{DC}	⊿T=+40℃	-	700	-	mA	-

Unless otherwise stated, V_{BAT}=V_{CE}= $V_{RELEASE(T)}$+0.1V (*5)

(*1) $V_{OUT(T)}$=Nominal Output Voltage

(*2) $V_{OUT(E)}$=Effective Output Voltage

The actual output voltage value $V_{OUT(E)}$ is the PFM comparator threshold voltage in the IC. Therefore, the DC/DC circuit output voltage, including the peripheral components, is boosted by the ripple voltage average value. Please refer to the characteristic example.

(*3) LX SW "Pch" ON resistance=(V_{LX}-V_{OUT} pin measurement voltage) / 200mA

(*4) The LX SW "Nch" ON resistance measurement method is shown in the measurement circuit diagram.

(*5) $V_{RELEASE(T)}$= Nominal UVLO release voltage

(*6) $V_{RELEASE(E)}$= Actual UVLO release voltage

(*7) $V_{DETECT(E)}$= $V_{RELEASE(E)}$ -$V_{HYS(E)}$= Actual UVLO detect voltage

(*8) $V_{HYS(E)}$= Actual UVLO hysteresis voltage

Downloaded from Arrow.com.

■ELECTRICAL CHARACTERISTICS (Continued)

SYMBOL	E1		E9		E2		E3		E4	
PARAMETER	Output Voltage (XCL101)		Output Voltage (XCL100)		Supply Current		LX SW "Pch" ON RESISTANCE		Supply Current2	
UNITS: V	UNITS: V		UNITS: V		UNITS: μA		UNITS: Ω		UNITS: μA	
OUTPUT VOLTAGE	MIN.	MAX.	MIN.	MAX.	TYP.	MAX.	TYP.	MAX.	TYP.	MAX.
1.8	1.764	1.836	-	-	6.1	9.4	0.84	1.08	6.8	9.7
1.9	1.862	1.938	-	-						
2.0	1.960	2.040	-	-						
2.1	2.058	2.142	-	-						
2.2	2.156	2.244	-	-						
2.3	2.254	2.346	-	-	6.2	9.7	0.75	0.97	6.9	9.8
2.4	2.352	2.448	-	-						
2.5	2.450	2.550	-	-						
2.6	2.548	2.652	-	-						
2.7	2.646	2.754	-	-						
2.8	2.744	2.856	-	-						
2.9	2.842	2.958	-	-						
3.0	2.940	3.060	2.940	3.060	6.3	10.0	0.65	0.85	7.0	10.0
3.1	3.038	3.162	3.038	3.162						
3.2	3.136	3.264	3.136	3.264						
3.3	3.234	3.366	3.234	3.366						
3.4	3.332	3.468	3.332	3.468						
3.5	3.430	3.570	3.430	3.570	6.4	10.2	0.61	0.78	7.1	10.1
3.6	3.528	3.672	3.528	3.672						
3.7	3.626	3.774	3.626	3.774						
3.8	3.724	3.876	3.724	3.876						
3.9	3.822	3.978	3.822	3.978						
4.0	3.920	4.080	3.920	4.080	6.5	10.4	0.57	0.74	7.2	10.2
4.1	4.018	4.182	4.018	4.182						
4.2	4.116	4.284	4.116	4.284						
4.3	4.214	4.386	4.214	4.386						
4.4	4.312	4.488	4.312	4.488						
4.5	4.410	4.590	4.410	4.590	6.7	10.7	0.53	0.72	7.3	10.3
4.6	4.508	4.692	4.508	4.692						
4.7	4.606	4.794	4.606	4.794						
4.8	4.704	4.896	4.704	4.896						
4.9	4.802	4.998	4.802	4.998						
5.0	4.900	5.100	4.900	5.100						

Downloaded from Arrow.com.

■ELECTRICAL CHARACTERISTICS (Continued)

SYMBOL	E5		E6		E7		E8	
PARAMETER	Input Pin Current2		UVLO Current		UVLO RELEASE VOLTAGE		UVLO Bypass Current	
UNITS:V	UNITS：μA		UNITS：μA		UNITS：V		UNITS：μA	
UVLO Release Voltage	TYP.	MAX.	TYP.	MAX.	MIN.	MAX.	TYP.	MAX.
1.65	0.71	1.50	3.25	6.00	1.601	1.699	2.15	4.10
1.70					1.649	1.751		
1.75	0.73	1.60	3.27	6.10	1.698	1.802	2.20	4.20
1.80					1.746	1.854		
1.85	0.75	1.60	3.29	6.20	1.795	1.905	2.30	4.20
1.90					1.843	1.957		
1.95	0.77	1.60	3.31	6.20	1.892	2.008	2.35	4.30
2.00					1.940	2.060		
2.05	0.79	1.70	3.33	6.30	1.989	2.111	2.40	4.30
2.10					2.037	2.163		
2.15	0.82	1.70	3.35	6.30	2.086	2.214	2.45	4.40
2.20					2.134	2.266		

Downloaded from Arrow.com.

■TEST CIRCUITS

<Test Circuit No.①>

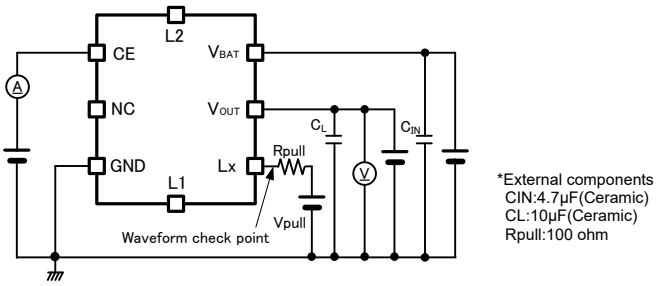

<Test Circuit No.⑤>

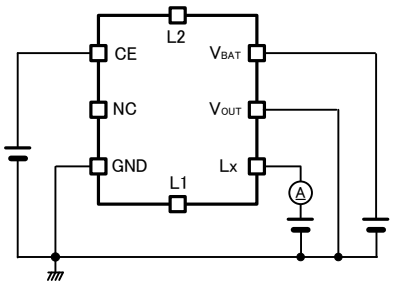

<Test Circuit No.②>

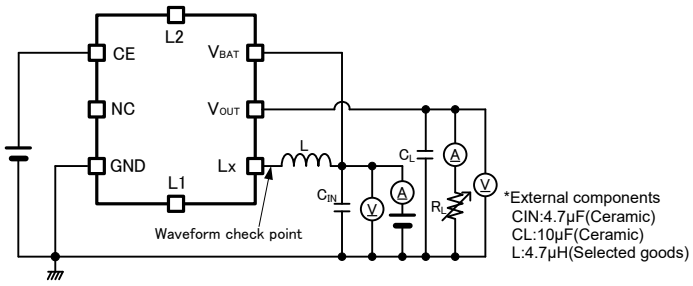

<Test Circuit No.⑥>

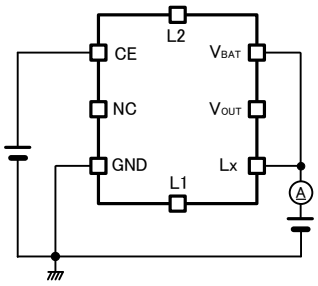

<Test Circuit No.③>

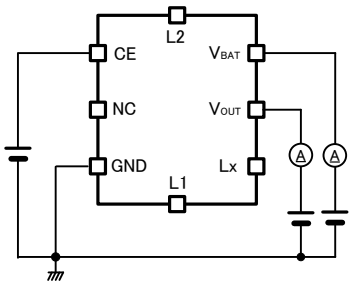

<Test Circuit No.⑦>

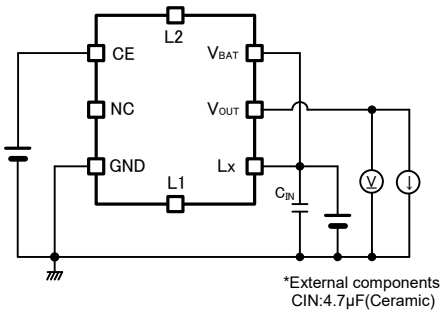

<Test Circuit No.④>

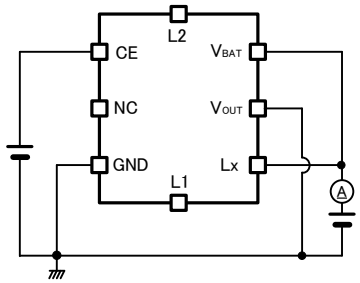

<Test Circuit No.⑧>

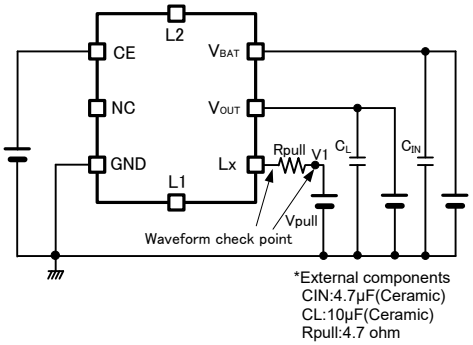

<L_X SW "Nch" ON Resistance Measurement Method>

Use Test Circuit No.8 to adjust V_{pull} so that the L_X pin voltage becomes 100mV when the Nch drive Tr is ON and then the voltage at both ends of R_{pull} is measured to find the Lx SW "Nch" ON resistance.

$$R_{LXN}=0.1V / \{(V1 - 0.1V) / 4.7\Omega)\}$$

Note that V1 is the R_{pull} previous voltage when the Nch driver Tr is ON. Use an oscilloscope or other instrument to measure the L_X pin voltage and V1.

Downloaded from Arrow.com.

■TYPICAL APPLICATION CIRCUIT

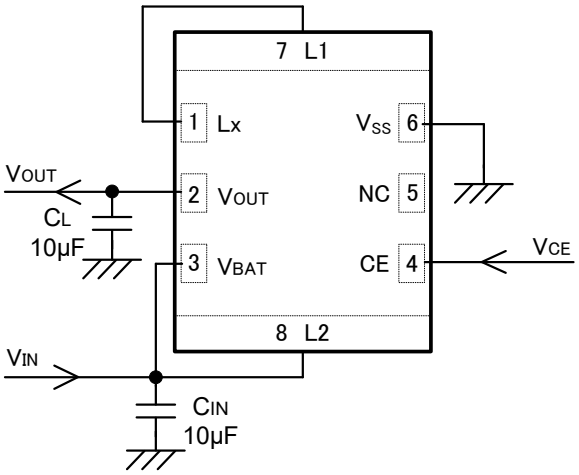

(TOP VIEW)

* The embedded coil is optimized for XCL100/XCL101 series. Please do not use for other purposes.

【Recommended External Components】

	MANUFACTURE	PRODUCT NUMBER	VALUE	L×W (mm)
C_{IN}, C_L	TDK	C1608JB1A106K	10μF/10V	1.60 × 0.80
		C1608X5R1A106K	10μF/10V	1.60 × 0.80
		C2012JB1A106K	10μF/10V	2.00 × 1.25
		C2012X5R106K	10μF/10V	2.00 × 1.25
	TAIYO YUDEN	LMK107BBJ106MALT	10μF/10V	1.60 × 0.80
		LMK212ABJ106KG	10μF/10V	2.00 × 1.25
		LMK212BBJ226MG	22μF/10V	2.00 × 1.25
		JMK212BBJ476MG	47μF/6.3V	2.00 × 1.25

Downloaded from Arrow.com.

■OPERATION EXPLANATION

The XCL100/XCL101 Series consists of a standard voltage source, a PFM comparator, a Nch driver Tr, a Pch synchronous rectifier switch Tr, a current sense circuit, a PFM control circuit and a CE control circuit, etc. (refer to the block diagram below.)

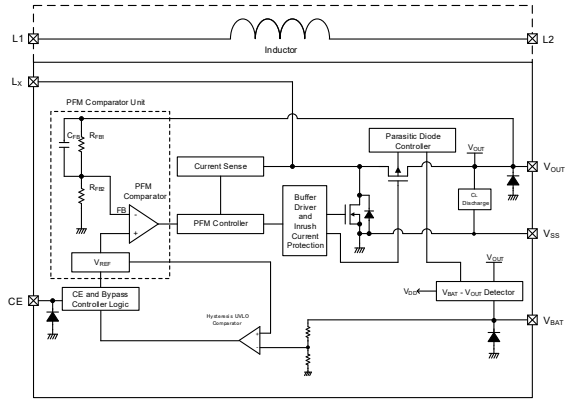

< XCL100B Type BLOCK DIAGRAM >

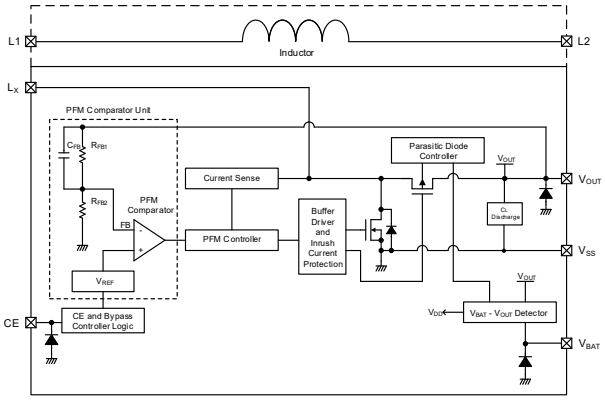

< XCL101BType BLOCK DIAGRAM >

Current limit PFM control is used for the control method to make it difficult for the output voltage ripple to increase even when the switching current is superimposed, so the product can be used within a wide voltage and current range. Further, because PFM control is used, it has excellent transient response to support low capacity ceramic capacitors to realize a compact, high-performance boost DC/DC converter.
The synchronous driver and rectifier switch Tr efficiently sends the coil energy to the capacitor connected to the V_{OUT} pin to achieve highly efficient operation from low to high loads.

The electrical characteristics actual output voltage $V_{OUT(E)}$ is the PFM comparator threshold voltage shown in the block diagram. Therefore, the booster circuit output voltage average value, including the peripheral components, depends on the ripple voltage, so this must be carefully evaluated before being used in the actual product.

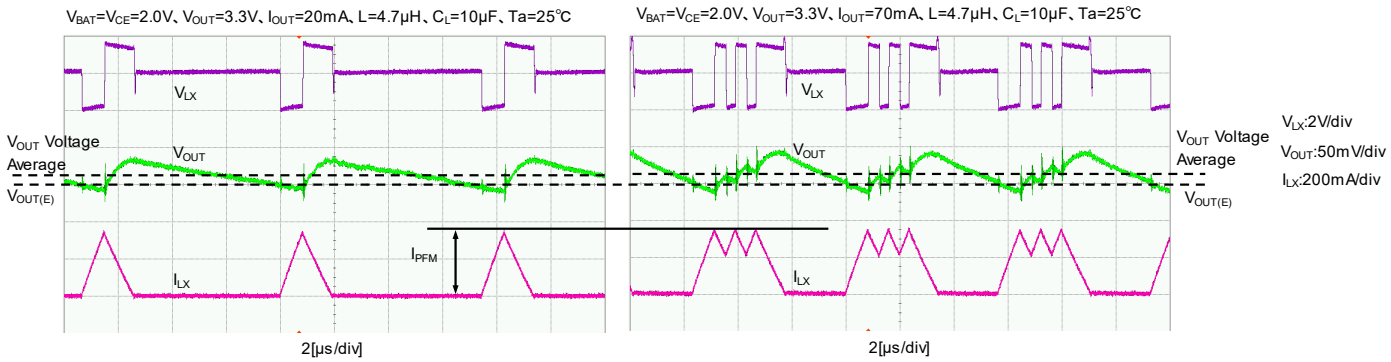

< Reference Voltage Source (V_{REF})>

The reference voltage source (V_{REF} voltage) provides the reference voltage to ensure stable output voltage of the DC/DC converter.

< PFM Control >

①The voltage from the output voltage divided by the division resistors R_{FB1} and R_{FB2} in the IC is used as feedback voltage (FB voltage), and the PFM comparator is compared with the FB voltage and V_{REF}. If the FB voltage is lower than V_{REF}, the signal is sent to the buffer driver via the PFM control circuit and the Nch driver Tr is turned ON. If the FB voltage is higher than V_{REF}, the PFM comparator sends a signal that does not turn ON the Nch driver Tr.

②The current sense circuit monitors the current flowing in the Nch driver Tr connected to the Lx pin when the Nch driver Tr is ON. When the prescribed PFM switching current (I_{PFM}) is reached, the signal is sent to the buffer driver via the PFM control circuit to turn OFF the Nch driver Tr and turn ON the Pch synchronous rectifier switch Tr.

③The Pch synchronous rectifier switch Tr ON time (off time) is dynamically optimized internally. After the off time has passed, when the PFM comparator confirms the V_{OUT} voltage has exceeded the set voltage, a signal that does not allow the Nch driver Tr to be turned on is sent from the PFM comparator to the PFM control circuit, but if the V_{OUT} voltage remains lower than the set voltage, then Nch driver Tr ON is started.

The intervals of the above ①②③ linked operations are continuously adjusted in response to the load current to ensure the output voltage is kept stable from low to high loads and that it is done with good efficiency.

Downloaded from Arrow.com.

■OPERATION EXPLANATION (Continued)

<PFM Switching Current>

The PFM switching current unit monitors the current flowing in the Nch driver Tr and functions to limit the current flowing in the Nch driver Tr, but if the load current becomes much larger than the PFM switching energy, the V_{OUT} voltage becomes lower and prevents the coil current in the Nch driver Tr OFF period from lowering, which affects the internal circuit delay time and results in an excessive current that is larger than the PFM switching current flowing in the Nch driver Tr and Pch synchronous rectifier switch Tr.

<Load Disconnection Function, Bypass Mode>

When "L" voltage is input to the CE pin, the A/B type enters into standby mode and the C type enters into bypass mode to stop the circuit required for the boost operation. In the standby mode the load cut-off function operates and both the Nch driver Tr and Pch synchronous rectifier switch Tr are turned OFF, which cuts off the current to the L_X pin and V_{OUT} pin and the parasitic diode control circuit connects the parasitic diode cathode of the Pch synchronous rectifier switch Tr to the L_X pin ①. In the bypass mode the Nch driver Tr is OFF, the Pch synchronous rectifier switch Tr is ON when $V_{LX} > V_{OUT}$, and the parasitic diode control circuit connects the parasitic diode cathode of the Pch synchronous rectifier switch Tr to the V_{OUT} pin ②. Also, when $V_{LX} < V_{OUT}$, the Pch synchronous rectifier switch Tr is turned OFF and the parasitic diode cathode is connected to the V_{OUT} pin ②.

Note: Except for the moment when the V_{BAT} voltage rises up under a start-up condition.

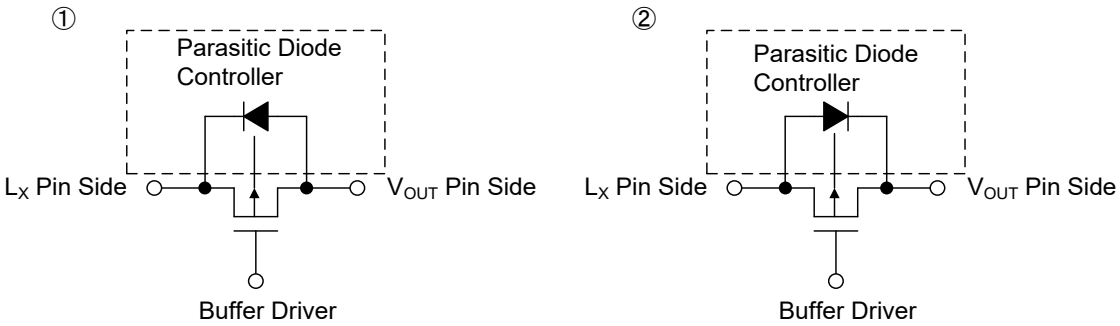

< V_{BAT}-V_{OUT} Voltage Detection Circuit>

The V_{BAT}-V_{OUT} voltage detection circuit compares the V_{BAT} pin voltage with the V_{OUT} pin voltage, and whichever is the highest is operated to become the IC power supply (V_{DD}). In addition, if, during normal operation, the input voltage becomes higher than the output voltage, the Nch driver Tr is turned OFF and the Pch synchronous rectifier switch Tr is kept ON so that the input voltage passes through to the output voltage (through mode). When the input voltage becomes lower than the output voltage, the circuit automatically returns to the normal boost operation. This detection circuit does not operate when in the standby mode.

<Inrush Current Protection Function>

When the V_{BAT} or V_{CE} power supply is input, C_L is charged via the stable current that results from the inrush current protection function (refer to graphs below). Therefore, this function minimizes potential over current from the V_{BAT} pin to the V_{OUT} pin. Also, this current value depends on the V_{BAT} voltage. After CL is charged by the aforementioned stable current and V_{OUT} reaches around the V_{BAT} voltage level, the inrush current protection function will be released after several hundred μs ~ several ms and the IC will then move to step-up mode, bypass mode or through mode.

Inrush Current Protection Characteristics

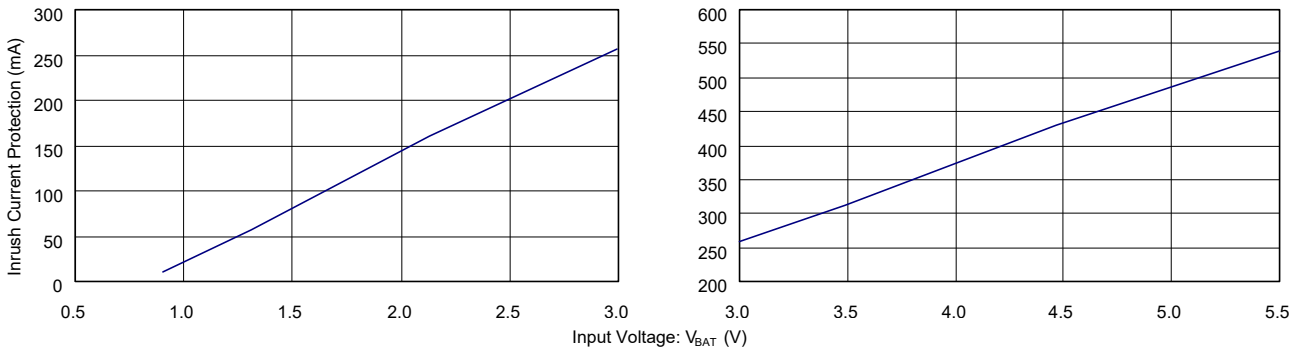

Downloaded from Arrow.com.

■OPERATION EXPLANATION (Continued)

<UVLO Function >

The UVLO function is selectable on the XCL100 series as an option. When the V_{BAT} pin voltage falls below the UVLO detect voltage, the IC stops switching or BYPASS operation and cuts off the current to the L_X pin and V_{OUT} pin (UVLO mode). In addition, when the V_{BAT} pin voltage recovers to above the UVLO release voltage, the IC begins operating again.

<C_L Discharge Function>

B types can discharge the electric charge at the output capacitor (C_L) quickly during standby mode(CE="L") via the Nch FET located between V_{OUT} and GND.

Electric charge at the output capacitor (C_L) is quickly discharged so that it may avoid application malfunction during standby mode.

Discharge time of the output capacitor (C_L) is set by the C_L discharge resistance (R_{DCHG}) and the output capacitor (C_L). By setting time constant of a C_L discharge resistance value [R_{DCHG}] and an output capacitor value (C_L) as τ(τ=C_L×R_{DCHG}), discharge time can be the calculated by the following formulas.

However, the C_L discharge resistance [R_{DCHG}] is depends on the V_{BAT} or V_{OUT}. We recommend that you fully check actual performance.

$$V=V_{OUT} \times e^{-t/\tau} \text{ or } t=\tau \ln(V_{OUT} / V)$$

V	: Output voltage after discharge
V_{OUT}	: Output voltage
t	: Discharge time
τ	: $C_L \times R_{DCHG}$
C_L	: Capacity value of the load capacitor (C_L)
R_{DCHG}	: C_L Discharge resistance, it depends on the V_{BAT} or V_{OUT}

Downloaded from Arrow.com.

■NOTE ON USE

1. Be careful not to exceed the absolute maximum ratings for externally connected components and this IC.
2. The DC/DC converter characteristics greatly depend not only on the characteristics of this IC but also on those of externally connected components, so refer to the specifications of each component and be careful when selecting the components. Be especially careful of the characteristics of the capacitor used for the load capacity C_L and use a capacitor with B characteristics (JIS Standard) or an X7R/X5R (EIA Standard) ceramic capacitor.
3. Use a ground wire of sufficient strength. Ground potential fluctuation caused by the ground current during switching could cause the IC operation to become unstable, so reinforce the area around the GND pin of the IC in particular.
4. Mount the externally connected components in the vicinity of the IC. Also use short, thick wires to reduce the wire impedance.
5. An excessive current that is larger than the PFM switching current flowing in the Nch driver Tr and Pch synchronous rectifier switch Tr, which could destroy the IC.
6. When in the bypass mode, the internal Pch synchronous rectifier switch Tr turns ON to allow current to flow to the Lx pin and V_{OUT} pin. When an excessive current comes from the V_{OUT} pin when this bypass operates, it could destroy the Pch synchronous rectifier switch Tr.
7. The CE pin does not have an internal pull-up or pull-down, etc. Apply the prescribed voltage to the CE pin.
8. The embedded coil is optimized for XCL100/XCL101 series. Please do not use for other purposes.
9. At high temperatures, the product performance could vary causing the efficiency to decline. Evaluate this carefully before use if the product will be used at high temperatures.
10. Please note that the leak current of the Pch synchronous rectifier switch Tr during high-temperature standby operation could cause the output voltage to increase.
11. When the voltage difference between V_{IN} and V_{OUT} is small, switching energy increases and there is a possibility that the ripple voltage will be too large. And when the ripple voltage becomes big by influence of a load current, please add the C_L capacitor.
12. When the booster circuit is activated by a low input voltage, during the time until the output voltage reaches about 1.7V, the PFM switching current function might not operate causing the coil current to be superimposed. (See the figure below.)

$V_{BAT}=V_{CE}$=0→0.9V、V_{OUT}=1.8V、I_{OUT}=1mA、L=4.7μH、C_L=10μF、Ta=25℃

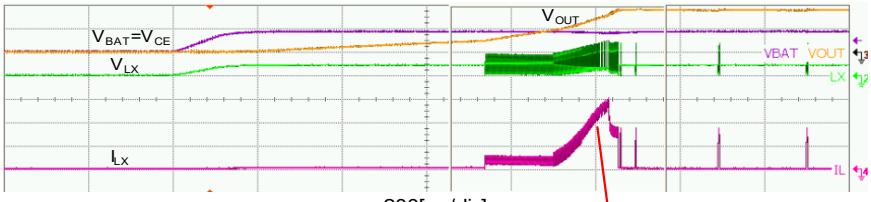

$V_{BAT}=V_{CE}$:1.0V/div
V_{OUT}:1.0V/div
V_{LX}:2.0V/div
I_{LX}:200mA/div

200[μs/div]

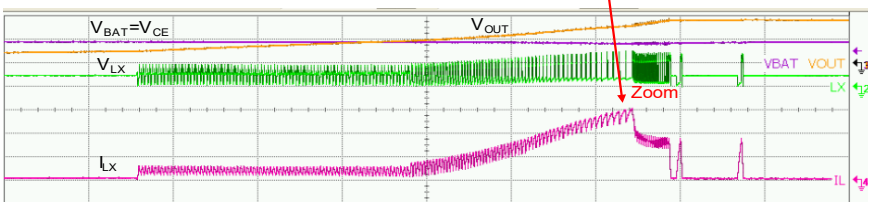

$V_{BAT}=V_{CE}$:1.0V/div
V_{OUT}:1.0V/div
V_{LX}:2.0V/div
I_{LX}:200mA/div

50[μs/div]

$V_{BAT}=V_{CE}$=0→1.7V、V_{OUT}=1.8V、I_{OUT}=1mA、L=4.7μH、C_L=10μF、Ta=25℃

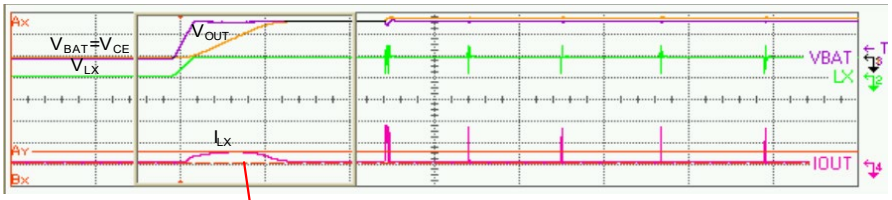

$V_{BAT}=V_{CE}$:1.0V/div
V_{OUT}:1.0V/div
V_{LX}:2.0V/div
I_{LX}:200mA/div

200[μs/div]

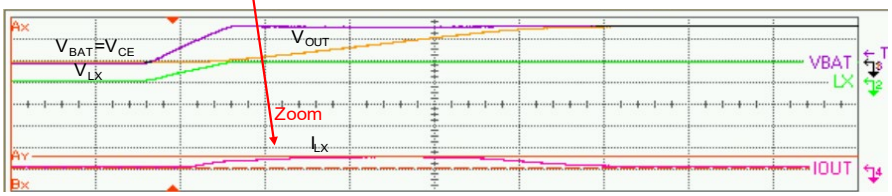

$V_{BAT}=V_{CE}$:1.0V/div
V_{OUT}:1.0V/div
V_{LX}:2.0V/div
I_{LX}:200mA/div

50[μs/div]

Downloaded from Arrow.com.

■NOTE ON USE (Continued)

13. If the C_L capacity or load current becomes excessively large, the output voltage start-up time, when the power is turned on, will increase, so the coil current might be superimposed during the time it takes for the output voltage to become sufficiently higher than the V_{BAT} voltage.

14. If the input voltage is higher than the output voltage, then the circuit automatically enters the through mode. When the input voltage becomes close to the output voltage, there could be repeated switching between the boost mode and through mode causing the ripple voltage to fluctuate. (Refer to the graphic below)

$V_{BAT}=V_{CE}=3.316V, V_{OUT}=3.412V, I_{OUT}=3mA, L=4.7\mu H, C_L=10\mu F, Ta=25^{\circ}C$

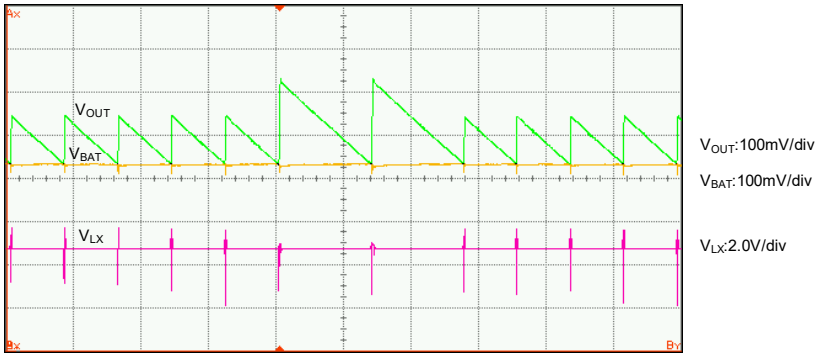

200[μs/div]

15. If a different power supply is connected from an external source to the IC could be destroyed.
Refer to the table below for external voltage availability for each product type and operating conditions.

	Series/ TYPE	$V_{RELEASE(E)} \leqq V_{BAT} \leqq 5.5V$ (UVLO Release State)		$0.9V \leqq V_{BAT} < V_{RELEASE(E)}$ (UVLO Detect State)		$V_{BAT} < 0.9V$	
		CE="L"	CE="H"	CE="L"	CE="H"	CE="L"	CE="H"
Applied Voltage to the V_{OUT} pin	XCL100A	Yes	Yes	Yes	Yes	No	No
	XCL100B	No (CL Discharge Operation)		No (CL Discharge Operation)	No (CL Discharge Operation)		
	XCL100C	No (Reverse Flow toward the input)		Yes	Yes		

	Series/ TYPE	$0.9V \leqq V_{BAT} \leqq 5.5V$		$V_{BAT} < 0.9V$	
		CE="L"	CE="H"	CE="L"	CE="H"
Applied Voltage to the V_{OUT} pin	XCL101A	Yes	Yes	No	No
	XCL101B	No (CL Discharge Operation)			
	XCL101C	No (Reverse Flow toward the input)			

16. For temporary, transitional voltage drop or voltage rising phenomenon, the IC is liable to malfunction should the ratings be exceeded.

17. Torex places an importance on improving our products and their reliability. We request that users incorporate fail-safe designs and post-aging protection treatment when using Torex products in their systems.

Downloaded from Arrow.com.

■NOTE ON USE (Continued)

18. With the A Type, when the V_{BAT} or V_{CE} power supply is input, if the V_{OUT} pin voltage does not exceed V_{BAT} -0.35V, which can happen due to the load current being more than the inrush protection current, step-up mode or through mode operations won't function correctly.

19. In the case of products with the UVLO function that do not have C_L discharge, the output voltage may occasionally rise due to leakage current from the Pch synchronous switch Tr when high-temperature UVLO mode operates.

20. The proper position of mounting is based on the coil terminal

●Instruction of pattern layouts

1. In order to stabilize V_{BAT} voltage level, we recommend that a by-pass capacitor (C_{IN}) be connected as close as possible to the V_{BAT} and ground pins.

2. Please mount each external component as close to the IC as possible.

3. Wire external components as close to the IC as possible and use thick, short connecting traces to reduce the circuit impedance.

4. Make sure that the ground traces are as thick as possible, as variations in ground potential caused by high ground currents at the time of switching may result in instability of the IC.

5. Internal driver transistors bring on heat because of the transistor current and ON resistance of the driver transistors.

6. As precautions on mounting, please set the mounting position accuracy within 0.05 mm

●Recommended Pattern Layout

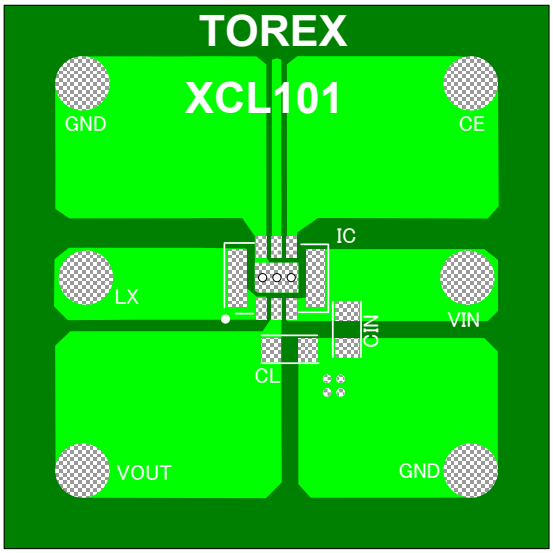

<Top view>

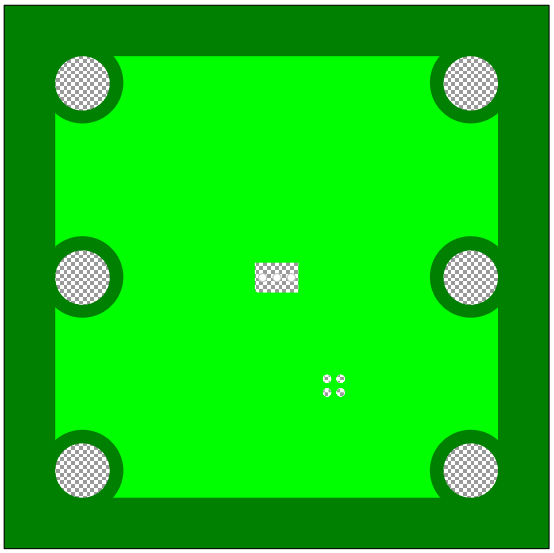

<Bottom view>

■About the appearance (coil part)

(1) Coils are compliant with general surface mount type chip coil (inductor) specifications and may have scratches, flux contamination and the like.

Downloaded from Arrow.com.

■TYPICAL PERFORMANCE CHARACTERISTICS

1) Output Voltage vs. Output Current

XCL101C331

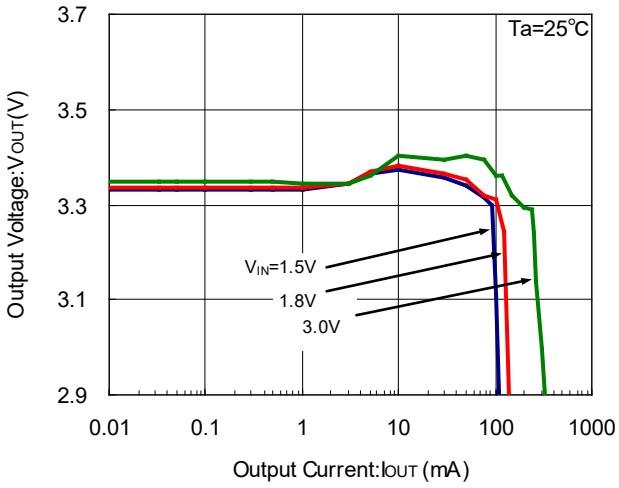

XCL101C501

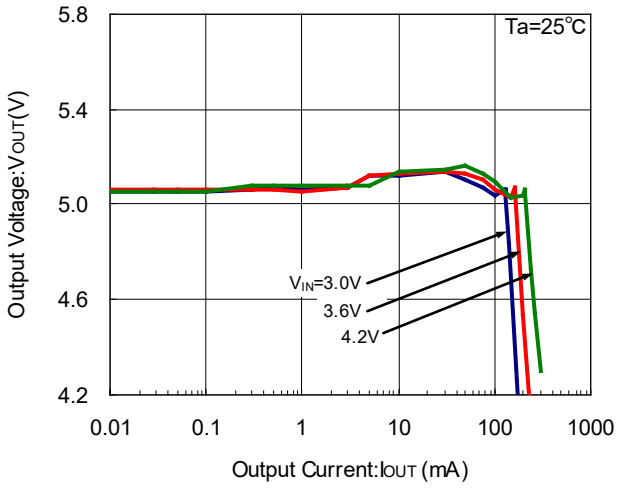

2) Efficiency vs. Output Current

XCL101C331

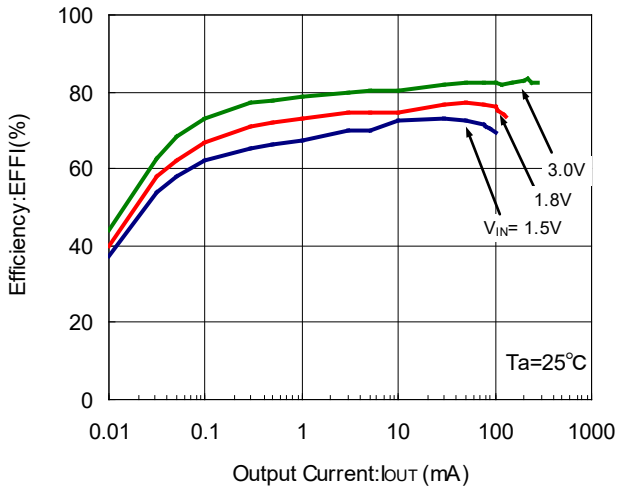

XCL101C501

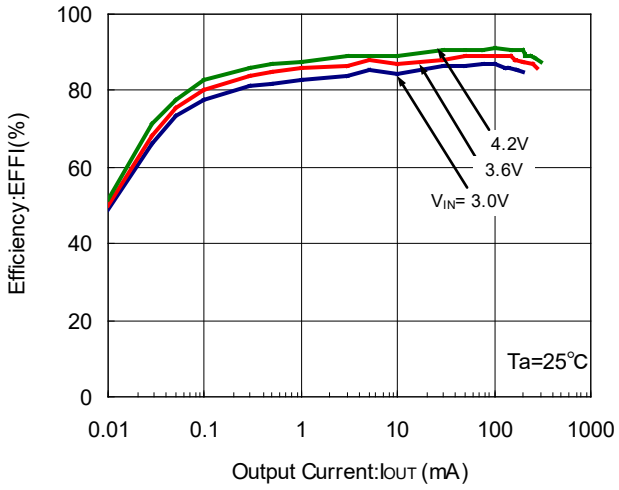

3) Ripple Voltage vs. Output Current

XCL101C331

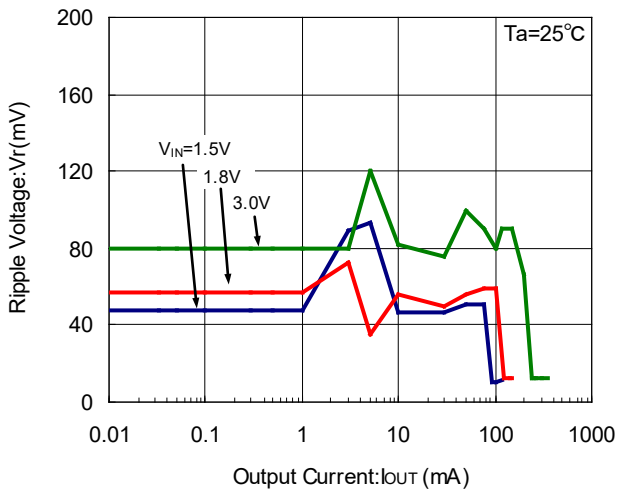

XCL101C501

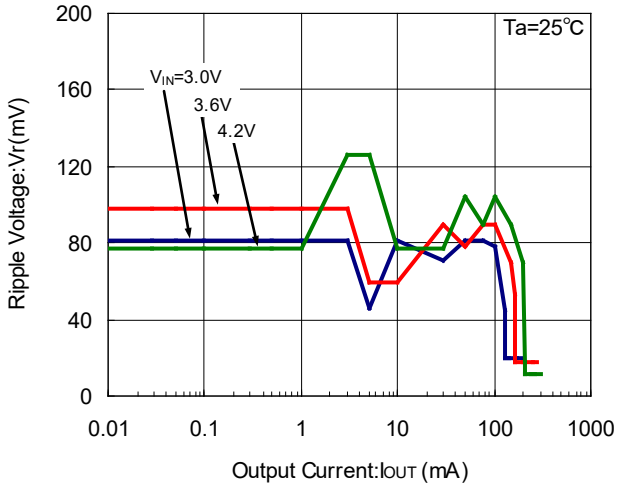

Downloaded from Arrow.com.

■TYPICAL PERFORMANCE CHARACTERISTICS (Continued)

4) Bypass Voltage vs. Output Current

XCL101C331

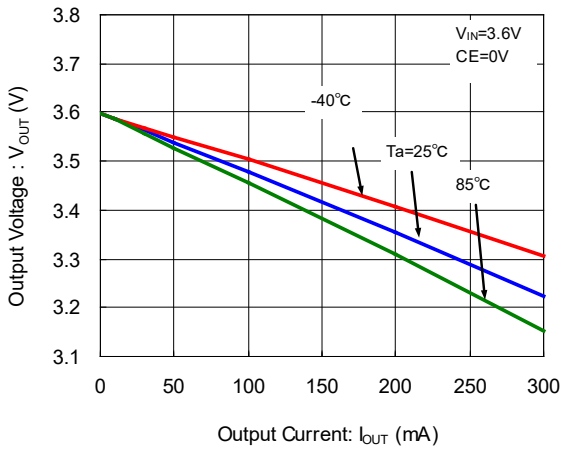

XCL101C501

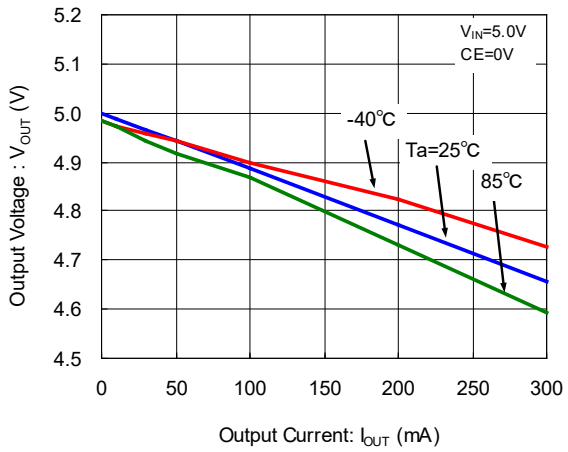

5) Load Transient Response

XCL101C331

I_{OUT}= 1.0mA→50mA

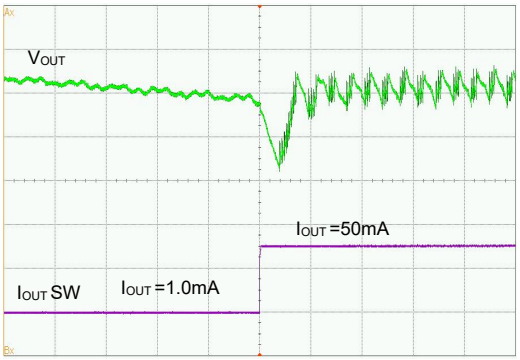

V_{BAT}=V_{CE}=1.8V, V_{OUT}=3.3V, Ta=25℃, C_{IN}=4.7μF, C_L=10μF
V_{OUT}:50mV/Div, I_{OUT} SW:1.0V/Div, Time:20μs

XCL101C331

I_{OUT}= 50mA→1.0mA

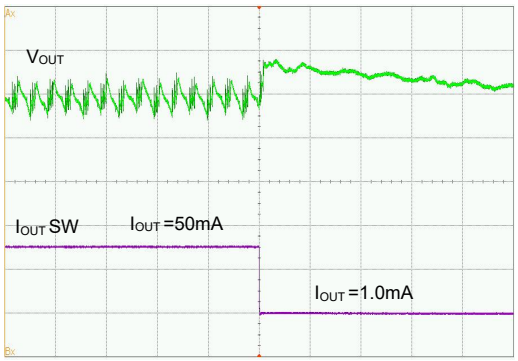

V_{BAT}=V_{CE}=1.8V, V_{OUT}=3.3V, Ta=25℃, C_{IN}=4.7μF, C_L=10μF
V_{OUT}:50mV/Div, I_{OUT} SW:1.0V/Div, Time:20μs

XCL101C501

I_{OUT}= 1.0mA→50mA

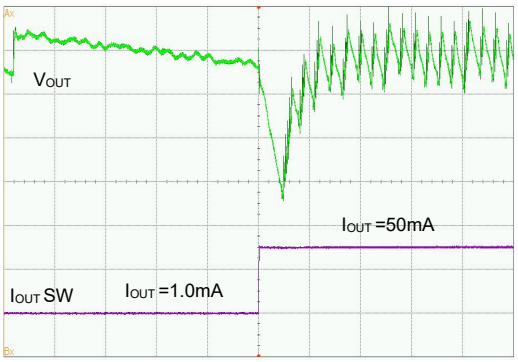

V_{BAT}=V_{CE}=3.0V, V_{OUT}=5.0V, Ta=25℃, C_{IN}=4.7μF, C_L=10μF
V_{OUT}:50mV/Div, I_{OUT} SW:1.0V/Div, Time:20μs

XCL101C501

I_{OUT}= 1.0mA→50mA

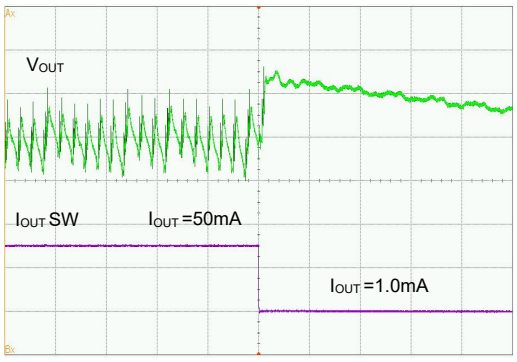

V_{BAT}=V_{CE}=3.0V, V_{OUT}=5.0V, Ta=25℃, C_{IN}=4.7μF, C_L=10μF
V_{OUT}:50mV/Div, I_{OUT} SW:1.0V/Div, Time:20μs

Downloaded from Arrow.com.

■PACKAGING INFORMATION

For the latest package information go to, www.torexsemi.com/technical-support/packages

PACKAGE	OUTLINE / LAND PATTERN	THERMAL CHARACTERISTICS
CL-2025-02	CL-2025-02 PKG	CL-2025-02 Power Dissipation

Downloaded from Arrow.com.

■MARKING RULE

XCL101

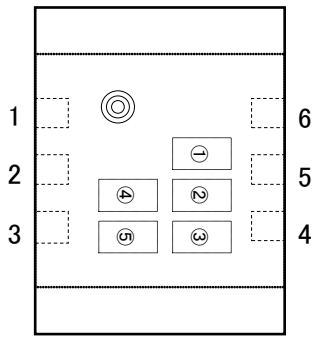

① represents products series

MARK	PRODUCT SERIES
1	XCL101******-G

② represents integer portion of the output voltage

XCL101A*****

V_{OUT} (V)	MARK
1.x	1
2.x	2
3.x	3
4.x	4
5.x	5

XCL101C*****

V_{OUT} (V)	MARK
1.x	B
2.x	C
3.x	D
4.x	E
5.x	F

③ represents the decimal part of output voltage

V_{OUT}(V)	MARK	PRODUCT SERIES
X.0	0	XCL101**0***-G
X.1	1	XCL101**1***-G
X.2	2	XCL101**2***-G
X.3	3	XCL101**3***-G
X.4	4	XCL101**4***-G
X.5	5	XCL101**5***-G
X.6	6	XCL101**6***-G
X.7	7	XCL101**7***-G
X.8	8	XCL101**8***-G
X.9	9	XCL101**9***-G

Example (mark②, ③)

MARK					
XCL101A33***-G		XCL101C28***-G		XCL101A50***-G	
②	③	②	③	②	③
3	3	C	8	5	0

④, ⑤ represents production lot number
01～09, 0A～0Z, 11～9Z, A1～A9, AA～AZ, B1～ZZ in order.
(G, I, J, O, Q, W excluded)
* No character inversion used.

Downloaded from Arrow.com.

■MARKING RULE

XCL100

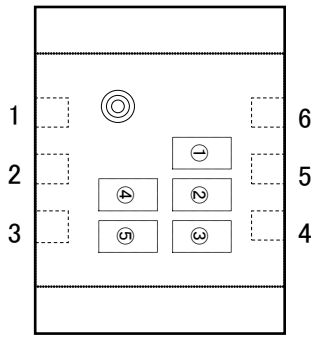

① represents products series

MARK	PRODUCT SERIES
R	XCL100A**1/2/3/4/5/6/7/8/9/A/B/CE*-G
S	XCL100B**1/2/3/4/5/6/7/8/9/A/B/CE*-G
T	XCL100C**1/2/3/4/5/6/7/8/9/A/B/CE*-G

② represents output voltage

MARK	V_{OUT} (V)	MARK	V_{OUT} (V)	MARK	V_{OUT} (V)	
1	3.5	7	4.1	D	3.0	4.7
2	3.6	8	4.2	E	3.1	4.8
3	3.7	9	4.3	F	3.2	4.9
4	3.8	A	4.4	H	3.3	5.0
5	3.9	B	4.5	K	3.4	-
6	4.0	C	4.6			

③ represents output voltage range and UVLO release voltage

MARK	Output Voltage Range	UVLO Release Voltage	PRODUCT SERIES
0	3.0～3.4V	1.65	XCL100***1**-G
1	3.5～5.0V		
2	3.0～3.4V	1.70	XCL100***2**-G
3	3.5～5.0V		
4	3.0～3.4V	1.75	XCL100***3**-G
5	3.5～5.0V		
6	3.0～3.4V	1.80	XCL100***4**-G
7	3.5～5.0V		
8	3.0～3.4V	1.85	XCL100***5**-G
9	3.5～5.0V		
A	3.0～3.4V	1.90	XCL100***6**-G
B	3.5～5.0V		
C	3.0～3.4V	1.95	XCL100***7**-G
D	3.5～5.0V		
E	3.0～3.4V	2.00	XCL100***8**-G
F	3.5～5.0V		
H	3.0～3.4V	2.05	XCL100***9**-G
K	3.5～5.0V		
L	3.0～3.4V	2.10	XCL100***A**-G
M	3.5～5.0V		
N	3.0～3.4V	2.20	XCL100***B**-G
P	3.5～5.0V		
R	3.0～3.4V	2.15	XCL100***C**-G
S	3.5～5.0V		

④, ⑤ represents production lot number
01～09, 0A～0Z, 11～9Z, A1～A9, AA～AZ, B1～ZZ in order.
(G, I, J, O, Q, W excluded)
* No character inversion used.

Downloaded from Arrow.com.

1. The product and product specifications contained herein are subject to change without notice to improve performance characteristics. Consult us, or our representatives before use, to confirm that the information in this datasheet is up to date.

2. The information in this datasheet is intended to illustrate the operation and characteristics of our products. We neither make warranties or representations with respect to the accuracy or completeness of the information contained in this datasheet nor grant any license to any intellectual property rights of ours or any third party concerning with the information in this datasheet.

3. Applicable export control laws and regulations should be complied and the procedures required by such laws and regulations should also be followed, when the product or any information contained in this datasheet is exported.

4. The product is neither intended nor warranted for use in equipment of systems which require extremely high levels of quality and/or reliability and/or a malfunction or failure which may cause loss of human life, bodily injury, serious property damage including but not limited to devices or equipment used in 1) nuclear facilities, 2) aerospace industry, 3) medical facilities, 4) automobile industry and other transportation industry and 5) safety devices and safety equipment to control combustions and explosions. Do not use the product for the above use unless agreed by us in writing in advance.

5. Although we make continuous efforts to improve the quality and reliability of our products; nevertheless Semiconductors are likely to fail with a certain probability. So in order to prevent personal injury and/or property damage resulting from such failure, customers are required to incorporate adequate safety measures in their designs, such as system fail safes, redundancy and fire prevention features.

6. Our products are not designed to be Radiation-resistant.

7. Please use the product listed in this datasheet within the specified ranges.

8. We assume no responsibility for damage or loss due to abnormal use.

9. All rights reserved. No part of this datasheet may be copied or reproduced unless agreed by Torex Semiconductor Ltd in writing in advance.

TOREX SEMICONDUCTOR LTD.

Downloaded from Arrow.com.