TRACO POWER

AC/DC Power Supply

TXM 150 Series, 150 Watt

Not recommended for new designs

- **Very compact metal cased power supplies**
- **High operating temperature up to 70°C**
- **Screw terminal block**
- **No internal fan**
- **Universal AC input, full range**
- **Active power factor correction >0.95**
- **Withstand 300 VAC surge input for 5 s**
- **Adjustable output voltage**
- **3-year product warranty**



UL 62368-1 IEC 62368-1

The TXM 150 series of 150 Watt is a family of enclosed AC/DC power supplies designed for cost critical applications. With a low profile metal case and screw terminal block connections, they are easy to install in any equipment. There are four models of single output voltages from 12 VDC to 48 VDC. These power supplies have universal input and comply with European EMC standards and the Low Voltage Directive (LVD).

Models

Order Code	Output Power max.	Output Voltage nom. (adjustable)	Output Current max.	Efficiency typ.
TXM 150-112 *	150 W	12 VDC (10.8 - 13.2 VDC)	12'500 mA	86 %
TXM 150-115 *		15 VDC (13.5 - 16.5 VDC)	10'000 mA	87 %
TXM 150-124 *	151 W	24 VDC (21.6 - 26.4 VDC)	6'300 mA	88 %
TXM 150-148 *	154 W	48 VDC (43.2 - 52.8 VDC)	3'200 mA	88 %

Note * Not recommended for new designs

Downloaded from Arrow.com.

Input Specifications

Input Voltage	- AC Range	Operational Range:	85 - 264 VAC (Full Range)
		Rated Range:	100 - 240 VAC (Full Range)
	- DC Range	Operational Range:	120 - 375 VDC (Designed for, no certification)
		Polarity:	irrelevant
			(Surge voltage (5 s max.): 300 VAC max.)
Input Frequency		Operational Range:	47 - 63 Hz
		Certified:	50/60 Hz
Power Consumption	- No load & Vin = 230 VAC		5'600 mW max.
	- No load & Vin = 115 VAC		4'400 mW max.
Input Current	- Full load & Vin = 115 VAC		2'000 mA max.
Input Inrush Current	- At 230 VAC		45 A max.
	- At 115 VAC		30 A max.
Power Factor	- At 230 VAC		0.95 min. (Active Power Factor Correction)
	- At 115 VAC		0.98 min. (Active Power Factor Correction)
Recommended Input Fuse			(The need of an external fuse has to be assessed in the final application.)

Output Specifications

Output Voltage Adjustment		±10% (By trim potentiometer) Output power must not exceed rated power!
Voltage Set Accuracy		±2% max.
Regulation	- Input Variation (Vmin - Vmax)	0.5% max.
	- Load Variation (0 - 100%)	1% max. (24 & 48 VDC models) 2% max. (12 & 15 VDC models)
Ripple and Noise (20 MHz Bandwidth)		100 mVp-p max. (w/ 0.1 µF || 10 µF)
Minimum Load		Not required
Temperature Coefficient		±0.03 %/K max.
Hold-up Time	- At 230 VAC	10 ms min.
Start-up Time	- At 230 VAC	2'000 ms max.
	- At 115 VAC	3'000 ms max.
Start-up Overshoot Voltage		5% max.
Short Circuit Protection		Continuous, Automatic recovery
Output Current Limitation		105 - 170% of Iout max.
Overvoltage Protection		110 - 150% of Vout nom.
Transient Response	- Response Deviation	5% max. (75% to 100% Load Step)
	- Response Time	400 µs typ. (75% to 100% Load Step)

Safety Specifications

Standards	- IT / Multimedia Equipment	EN 60950-1 EN 62368-1 IEC 60950-1 IEC 62368-1 UL 60950-1 UL 62368-1
	- Certification Documents	www.tracopower.com/txm150-safety-cert/
Protection Class		Class I (Prepared): Connection to PE
	See application note:	www.tracopower.com/info/protection-class.pdf
Energy Source	- Output, acc. to 62368-1	ES1
Power Source	- Output, acc. to 62368-1	PS3
Pollution Degree		PD 2
Over Voltage Category		OVC II

All specifications valid at 230 VAC, resistive full load and +25°C after warm-up time, unless otherwise stated.

Downloaded from Arrow.com.

EMC Specifications

EMI (Emissions)	- Conducted Emissions		EN 55032 class A (internal filter)
			EN 55032 class B (internal filter)
	- Radiated Emissions		EN 55032 class A (internal filter)
			EN 55032 class B (internal filter)
	- Harmonic Current Emissions		EN 61000-3-2, class A
	- Voltage Fluctuations & Flicker		EN 61000-3-3
EMS (Immunity)			EN 55024 (IT Equipment)
			EN 55035 (Multimedia)
	- Electrostatic Discharge	Air:	EN 61000-4-2, ±8 kV, perf. criteria B
		Contact:	EN 61000-4-2, ±4 kV, perf. criteria B
	- RF Electromagnetic Field		EN 61000-4-3, 3 V/m, perf. criteria A
	- EFT (Burst) / Surge		EN 61000-4-4, ±1 kV, perf. criteria B
		L to L:	EN 61000-4-5, ±1 kV, perf. criteria B
		L to PE:	EN 61000-4-5, ±2 kV, perf. criteria B
	- Conducted RF Disturbances		EN 61000-4-6, 3 Vrms, perf. criteria A
	- PF Magnetic Field	Continuous:	EN 61000-4-8, 1 A/m, perf. criteria A
	- Voltage Dips & Interruptions	230 VAC / 50 Hz:	EN 61000-4-11
			30%, 25 periods, perf. criteria C
			>95%, 0.5 periods, perf. criteria B
			>95%, 250 periods, perf. criteria C

General Specifications

Relative Humidity		90% max. (non condensing)
Temperature Ranges	- Operating Temperature	–10°C to +70°C
	- Storage Temperature	–30°C to +85°C
Power Derating	- High Temperature	1.67 %/K above 40°C (12 & 24 VDC models)
		1.33 %/K above 40°C (15 & 48 VDC models)
	- Low Input Voltage	0.83 %/V below 115 VAC (48 VDC model)
		1.33 %/V below 120 VAC (other models)
Over Temperature Protection Switch Off	- Protection Mode	100°C to 110°C (Automatic recovery at 50°C typ.)
Cooling System		Natural convection (20 LFM)
Altitude During Operation		5'000 m max.
Regulator Topology		Forward Converter
Switching Frequency		75 - 85 kHz (PWM)
Insulation System		Reinforced Insulation
Working Voltage (rated)		302 VAC
Isolation Test Voltage	- Input to Output, 60 s	4'000 VDC
	- Input to Case or PE, 60 s	2'500 VDC
Creepage	- Input to Output	7.1 mm min.
Clearance	- Input to Output	7.1 mm min.
Isolation Resistance	- Input to Output, 500 VDC	100 MΩ min.
Leakage Current	- Earth Leakage Current	3500 µA max.
	- Touch Current	250 µA max.
Reliability	- Calculated MTBF	200'000 h (MIL-HDBK-217F, ground benign)
Housing Material		Aluminum
Housing Type		Metal Case
Mounting Type		Chassis Mount
Connection Type		Screw Terminal
Weight		635 g

All specifications valid at 230 VAC, resistive full load and +25°C after warm-up time, unless otherwise stated.

Downloaded from Arrow.com.

Environmental Compliance	- REACH Declaration	www.tracopower.com/info/reach-declaration.pdf REACH SVHC list compliant REACH Annex XVII compliant
	- RoHS Declaration	www.tracopower.com/info/rohs-declaration.pdf Exemptions: 7(a), 7(c)-I (RoHS exemptions refer to the component concentration only, not to the overall concentration in the product (O5A rule).)
	- SCIP Reference Number	d351b852-9b05-44e1-a17e-360d6950df1b

Additional Information

Supporting Documents	www.tracopower.com/overview/txm150
Frequently Asked Questions	www.tracopower.com/glossary-faq
Glossary	www.tracopower.com/info/glossary.pdf
Service Portal	www.tracoserviceportal.com

Outline Dimensions

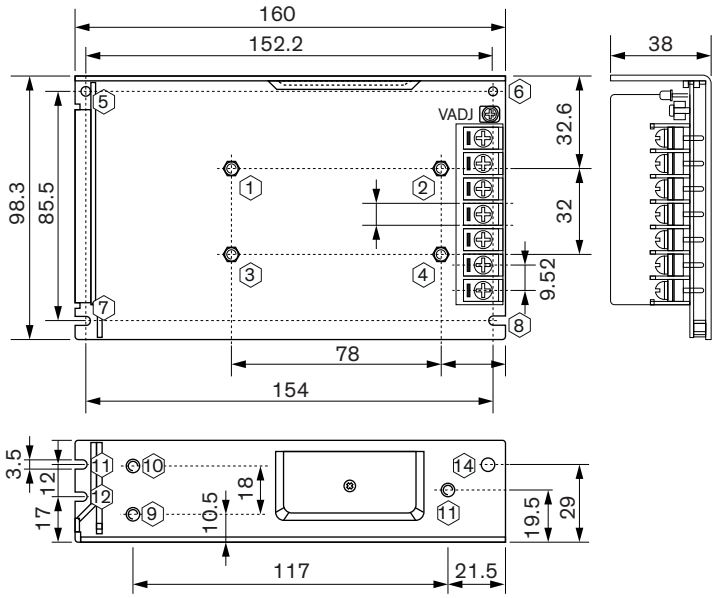

Dimensions in mm (inch)
Outside dimension tolerance: ±1.0 (±0.04)

Screw Definition				
Installation Method	**Position No.**	**Screw Size**	**L max.**	**Torque max.**
Bottom Installation	1 - 4	M3	4.0	12.0 kgfcm
	5 - 8		-	10.0 kgfcm
Side Installation	9 - 11		4.0	6.5 kgfcm
	12 - 14		-	10.0 kgfcm

Pin-Out	
Pin	**Function**
1	AC (L)
2	AC (N)
3	PE
4	– Vout
5	– Vout
6	+ Vout
7	+ Vout

Screw locked torque:
12.0 kgfcm (1.18 Nm) max.

© Copyright 2026 Traco Electronic AG

Downloaded from Arrow.com.