Speaker Alarm

Product No. 110231

HU2SPL Speaker-01C

Issue No. BS/TEA01.938

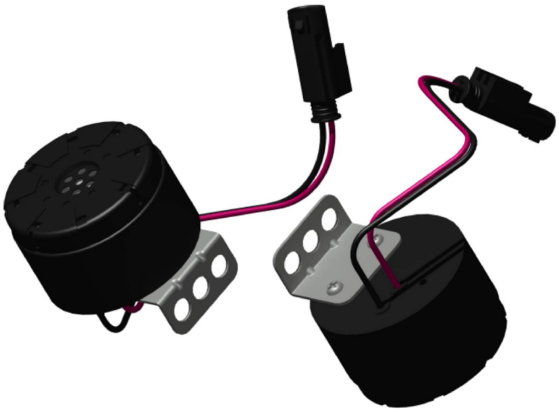

Features:

- IP67 waterproof rating
- Loud sound output
- RoHS

REFERENCE
BESTAR

BESTAR Holdings Co., Ltd.

www.be-star.com | info@be-star.com

Downloaded from Arrow.com.

Content:

1 Characteristics 3-4
1.1 Technical terms 3
1.2 Test method 4
2 Assembly Drawing 5
3 Dimension 6
4 Reliability Test 7
5 Packing 8-9
6 History change record 10
7 Important Notice 11

BESTAR REFERENCE REFERENCE BESTAR BESTAR REFERENCE

Downloaded from Arrow.com.

1. Characteristic

1.1 Technical terms

1. Rated Voltage	12/24VDC
2. Operating Voltage	11-28VDC
3. Current Consumption	≤300mA
4. SPL1 Level at 1m	96±3dB
SPL2 Level at 1m	80±3dB
5. Resonant Frequency	1000±300Hz
6. Tone Red（+）&Black（-）	Pulse
7. ON/OFF Cycles	80C/M±20
8. Storage Temperature	-20...+80°C
9. Operating Temperature	-20...+80°C
10. Housing color	Black
11. IP rating	IP67
12. Weight	110±10g

Function：

1)Trigger with power supply,the alarm begins after a short delay with SPL1;

2)Interrupt power to max.1.5sec,then trigger again,he alarm will switch to SPL2;

3)If interruption of power is longer than 1.5sec,trigger power again,it will get SPL1.

BESTAR REFERENCE

Downloaded from Arrow.com.

1.2 Test method:

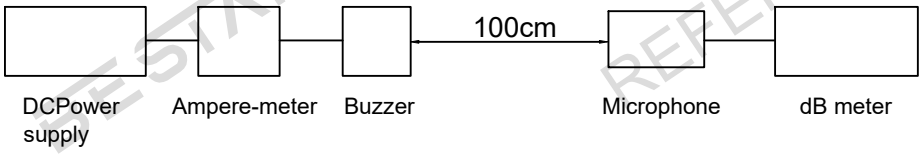

In the measuring test,the alarm are placed as follows:

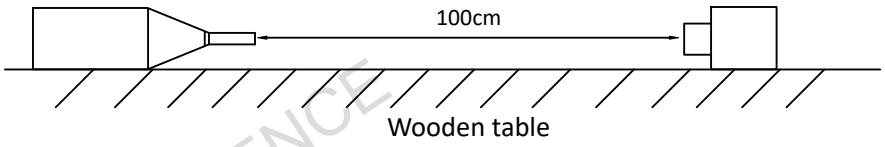

BESTAR REFERENCE

Downloaded from Arrow.com.

2.Assembly drawing

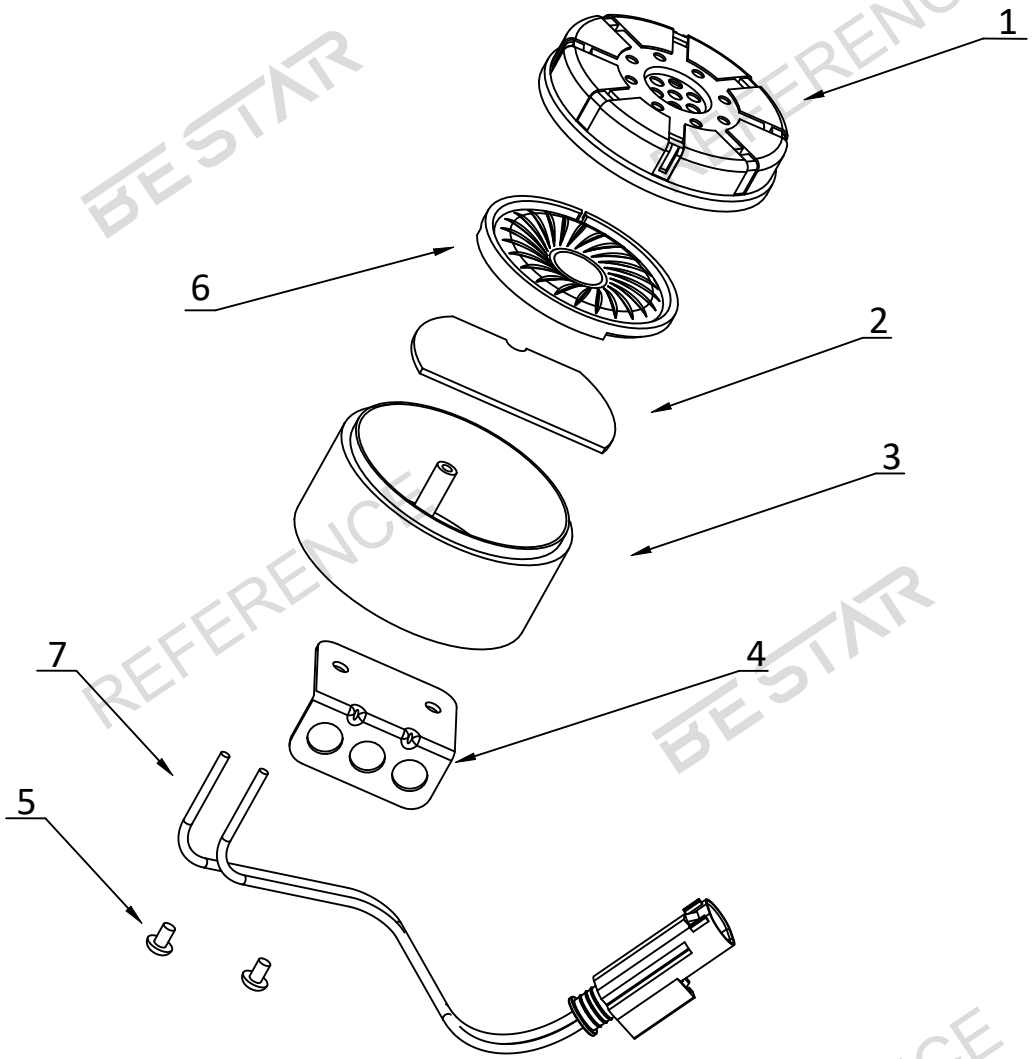

7. Wires	Tinned wire
6. Speaker	Dynamic Speaker
5. Self tapping screw	SPCC
4. Bracket	SPCC
3. lower housing	ABS
2. PCBA	FR-4
1. Upper housing	ABS

Downloaded from Arrow.com.

3.Dimension

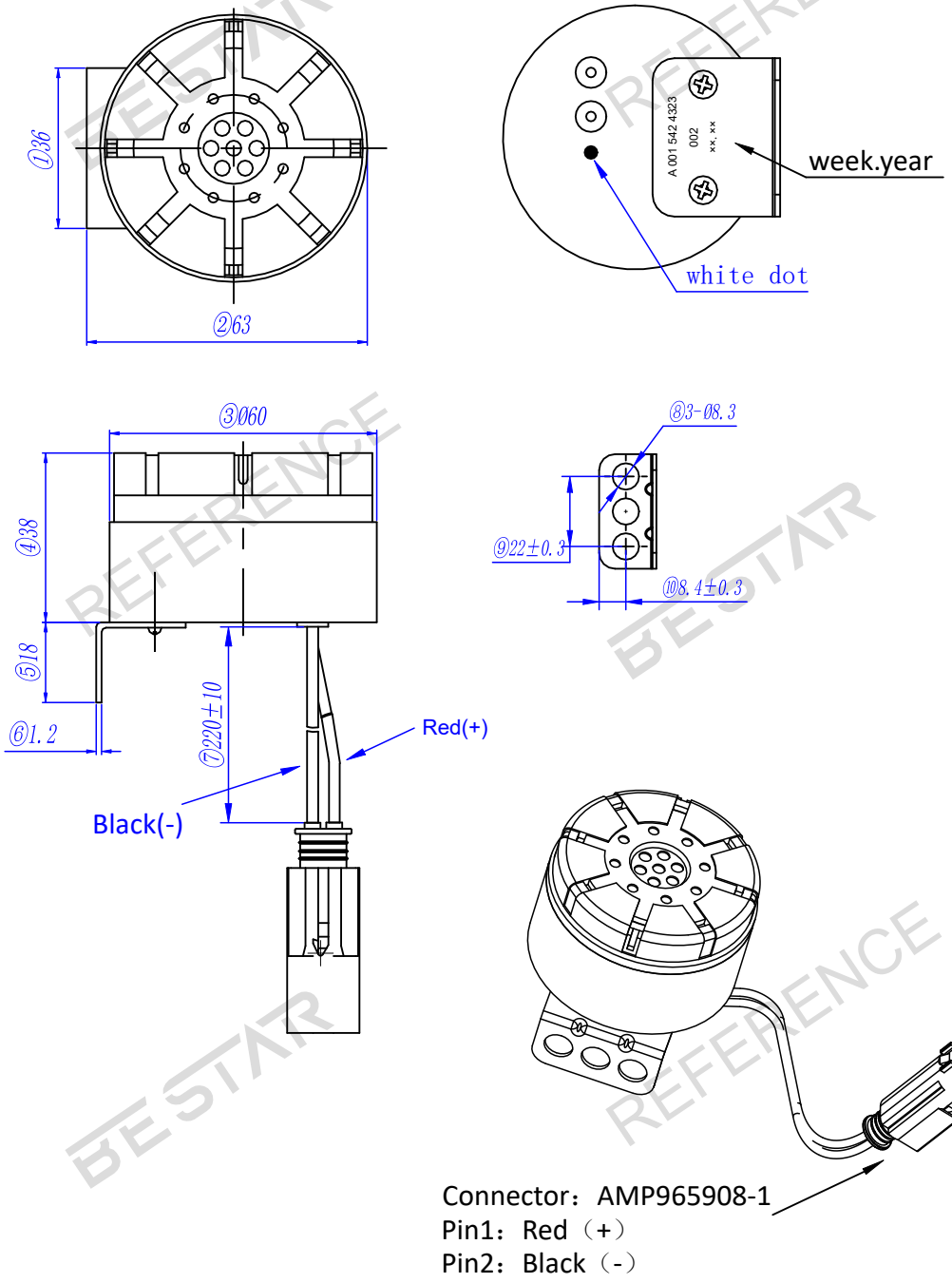

Tolerance:±0.5mm

Downloaded from Arrow.com.

4. Reliability test

4.1Low temperature test

Temperature	-20°C
Duration	98hrs

4.2High temperature test

Temperature	+80°C
Duration	98hrs

4.3Humidity test

Temperature	+40°C
Humidity	95%RH
Duration	98hrs

4.4Durability test

Duration	1000hrs actual continous

4.5Drop test

Height	70cm to the surface of 10mm to thick woodenboard

4.6 Vibration test

Cycles	2000cycles per minute
Amplitude	2mm
Directions	x,y,z three directions for 30min each

4.1-4.3 Speaker should be measured after 2hrs exposed in normal temperature, after each of test,no abnormality shall exist.

BESTAR REFERENCE

Downloaded from Arrow.com.

5. Packing

Packing Quantity : 1 pcs per paper box

paper box size:62*58*65mm

100 pcs per middle carton

middle carton size:350*315*270mm

2 middle cartons per carton,total 200 pcs per carton

carton size:370*335*560mm

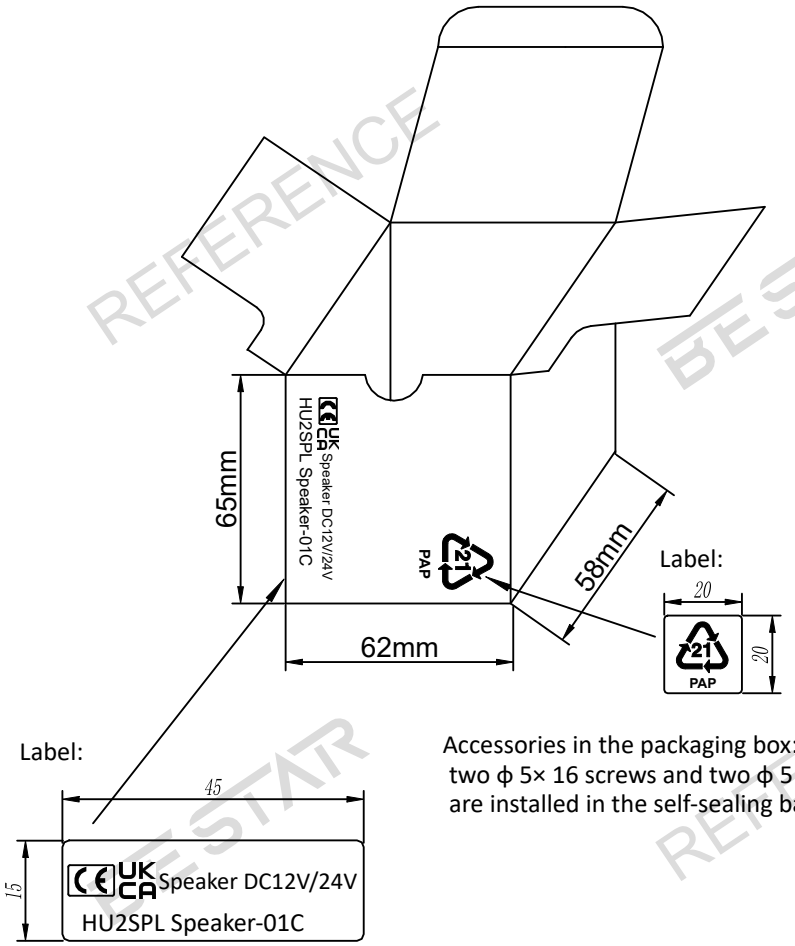

Accessories in the packaging box:
two ϕ 5× 16 screws and two ϕ 5 gaskets
are installed in the self-sealing bag(marked recyclable)

BESTAR REFERENCE

Downloaded from Arrow.com.

5. Packing

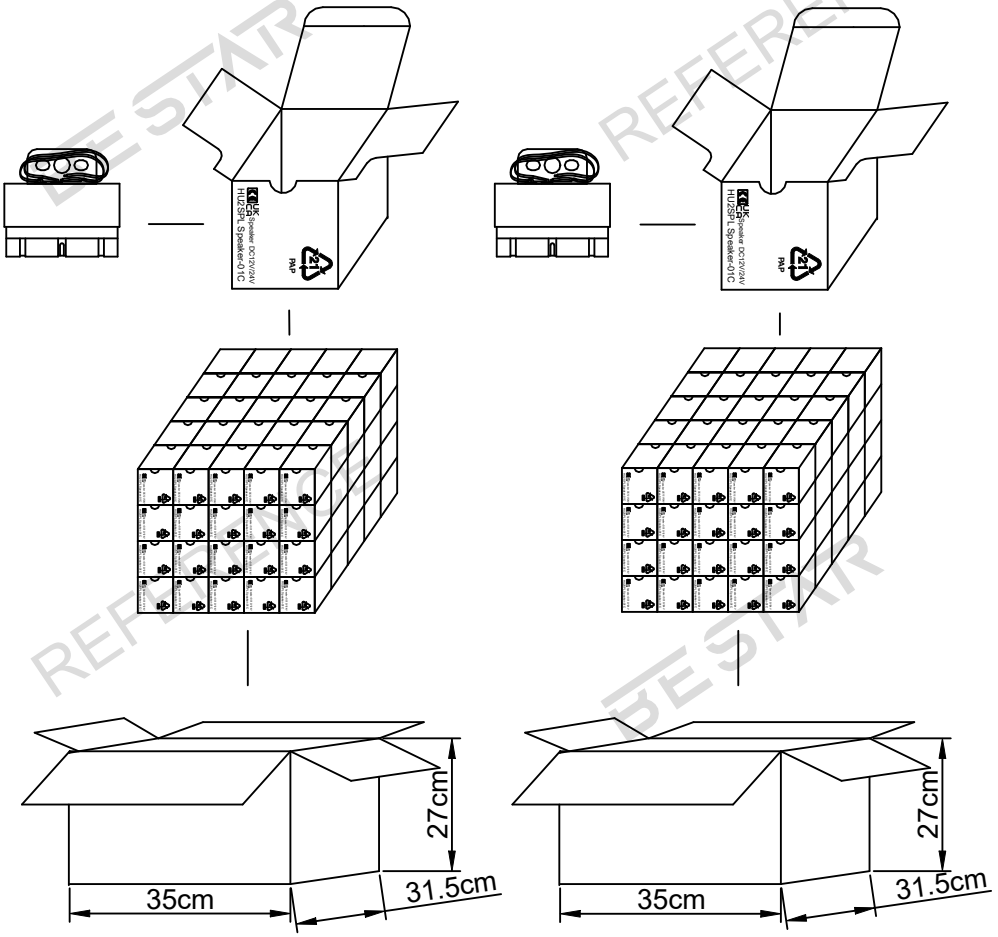

middle carton
size:35x31.5x27cm

middle carton
size:35x31.5x27cm

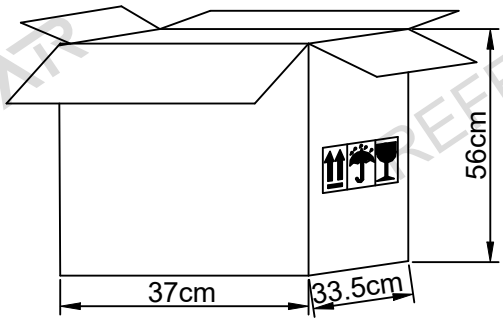

carton size:37x33.5x56cm

Downloaded from Arrow.com.

6. History change record

Version	Change Items	Date	Drawn	Checked	Approved
A0	First Edition	2022.01.07	Kaylee.Zhuang	Claire.Fu	Richard.Cheng

REFERENCE
BESTAR
REFERENCE
BESTAR

Downloaded from Arrow.com.

7.Important Notice

7.1 The products mustn't be washed

7.2 Store Condition（Packaging）

The products should be stored in the room ,where the temperature/humidity is stable. And avoid such places where there are large temperature changes. Please store the products at the following conditions:

Temperature: -10 to + 40 ℃ Humidity: 15 to 85% R.H.

7.3 Expire Date on Storage

Expire date (Shelf life) of the products is six months after deliveried under the conditions of a sealed and an unopened package. Please use the products within six months after deliveried.

If you store the products for a long time (more than six months), use carefully because the products may be degraded in the solderability and/or rusty.Please confirm solderability and characteristics for the products regularly.

7.4 Notice on Product Storage

(1) Please do not store the products in a chemical atmosphere (Acids, Alkali, Bases, Organic gas, Sulfides and so on), because the characteristics may be reduced at quality, and/or be degraded in the solderability due to the storage in a chemical atmosphere.

(2) Please use the products immediately after the package is opened, because the characteristics may be reduced at quality, and/or be degraded in the solderability due to storage under the poor condition.

BE STAR REFERENCE

Downloaded from Arrow.com.