TRACO POWER

AC/DC Industrial Power Supply

TIB 080-EX Series, 80 Watt

- **UL Hazloc Class I, division 2 approval and ATEX certification**
- **SEMI F47 compliant for voltage sag immunity**
- **Rugged metal case with optional side-mounting**
- **Power Back immunity**
- **150% peak current for 4 s**
- **Operating Temp –40°C to +70°C (full load up to 60°C)**
- **Adjustable output voltage**
- **High Reliability: MTBF 1 mill hrs per IEC 61709**
- **Short circuit and overload protection**
- **3-year product warranty**

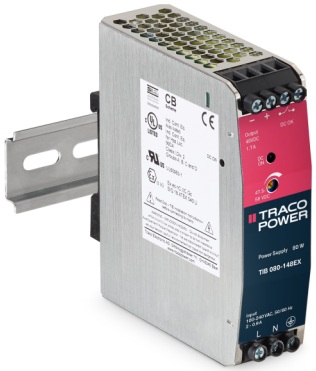

UL 508 UL 62368-1 IEC 62368-1

The TIB 080-EX family of next generation of 80 Watt din rail power supplies feature high efficiency operation of up to 90% enabling a slim design with alternative side-mounting for flat panels (DC OK Indicator on both front and side panel). These products certified to UL Hazloc Class 1 / Div 2, and ATEX (EN 60079-0, EN 60079-7. EN 600079-15) for operation in hazardous locations. These convection cooled power supplies have a -40°C to +60°C full load operating temperature range. 150% peak power for up to 4 seconds which is ideal for stepper motors, solenoids or actuators. The TIB 080-EX series has an important Back Power Immunity feature that helps protect against shut-down or malfunction with loads such as inductors and decelerating motors that can feed voltage back to the power supply. Outputs are radio-interference-suppressed to impede radiation at long output lines which reduces the common mode current to within limits of telecommunication ports. The series operate with a high power factor of up to 99% which also minimizes inrush current. Additional qualifications include IEC/EN/UL 62368-1, IEC/EN/UL 61010-1, UL 508 and CB Report with EMC compliance to IEC/EN 61000-6-2 and IEC/EN 61000-6-3.

Models

Order Code	Output Power max.	Output Voltage nom. (adjustable)	Output Current max.	Output Current peak	Efficiency typ.
TIB 080-112EX	80 W	12 VDC (11.8 - 15.0 VDC)	6'700 mA	10'050 mA	88 %
TIB 080-124EX		24 VDC (23.5 - 28.0 VDC)	3'400 mA	5'100 mA	90 %
TIB 080-148EX		48 VDC (47.0 - 56.0 VDC)	1'700 mA	2'550 mA	90 %

Options

TIB-RMK01	- Optional Ruggedized DIN-Rail Mounting Clip for EN 61373: www.tracopower.com/overview/tib-rmk01
on demand (backorder with MOQ non stocking item)	- Optional models with certified DC input - Optional models with additional IECEx certification

Downloaded from Arrow.com.

Input Specifications

Input Voltage	- AC Range	Operational Range:	85 - 264 VAC (Full Range)
		Rated Range:	100 - 240 VAC (Full Range)
	- DC Range	Operational Range:	90 - 350 VDC
		Certified Range:	100 - 250 VDC
		Polarity:	+DC: L / –DC: N
			(Models with certified DC input are on-demand.)
Input Frequency		Operational Range:	45 - 65 Hz
		Certified:	50/60 Hz
Power Consumption	- No load & Vin = 230 VAC		2'000 mW max.
	- No load & Vin = 115 VAC		2'000 mW max.
Input Inrush Current	- At 230 VAC		30 A max.
	- At 115 VAC		15 A max.
Power Factor	- At 230 VAC		0.48 min.
	- At 115 VAC		0.48 min.
Recommended Input Fuse			(The need of an external fuse has to be assessed in the final application.)

Output Specifications

Output Voltage Adjustment		12 VDC model:	11.8 - 15.0 VDC
		24 VDC model:	23.5 - 28.0 VDC
		48 VDC model:	47.0 - 56.0 VDC
			(By trim potentiometer)
			Output power must not exceed rated power!
Voltage Set Accuracy			±0.25% max.
Regulation	- Input Variation (Vmin - Vmax)		0.1% max.
	- Load Variation (10 - 90%)		0.5% max.
Boost Power			Output Current peak: See model table
			Peak power time: 4 s max. (auto switch off)
			Off Time: 10 s typ.
Ripple and Noise		12 VDC model:	100 mVp-p max.
(20 MHz Bandwidth)		24 VDC model:	100 mVp-p max.
		48 VDC model:	200 mVp-p max.
Capacitive Load			Infinite
Minimum Load			Not required
Temperature Coefficient			±0.02 %/K max.
Hold-up Time	- At 230 VAC		160 ms min.
	- At 115 VAC		20 ms min.
Start-up Time	- At 230 VAC		2'000 ms max.
	- At 115 VAC		2'000 ms max.
Short Circuit Protection			Continuous, Automatic recovery
Overload Protection			Constant Current Mode
			Switch off after 4 s delay, automatic restart
Output Current Limitation			155% min. of Iout max.
Overvoltage Protection			117 - 158% of Vout nom. (depending on model)
			16 - 19 VDC (12 VDC model)
			32 - 35 VDC (24 VDC model)
			56 - 60 VDC (48 VDC model)
			(In case of an internal error a second voltage regulation loop keeps the output voltage at a save level, the power supply turns off and tries to restart after 6 s.)
Transient Response	- Peak Variation		600 mV max. (10% to 90% Load Step)
	- Response Time		2'500 µs typ. (10% to 90% Load Step)

All specifications valid at 230 VAC, resistive full load and +25°C after warm-up time, unless otherwise stated.

Downloaded from Arrow.com.

Safety Specifications

Standards	- IT / Multimedia Equipment	EN 62368-1 IEC 62368-1 UL 62368-1
	- Industrial Control Equipment	UL 508
	- ATEX	EN 60079-0 EN 60079-15 EN 60079-7 EX II3G Ex nA nC IIC T4 GC
	- HazLoc	UL 121201 Class I; Div 2; Groups A,B,C,D; T4
	- Measurement, Control & Lab.	EN 61010-1 EN 61010-2-201 IEC 61010-1 IEC 61010-2-201 UL 61010-1 UL 61010-2-201
	- Certification Documents	www.tracopower.com/tib080-ex-safety-cert/ ((When operating in ex environments such as ATEX, Hazloc, etc.: Check certification documents for special conditions for safe use.))
Protection Class		Class I (Prepared): Connection to PE See application note: www.tracopower.com/info/protection-class.pdf
Energy Source	- Output, acc. to 62368-1	ES2 (48 Vout model) ES1
Power Source	- Output, acc. to 62368-1	PS3
Pollution Degree		PD 2
Over Voltage Category		OVC II

EMC Specifications

EMI (Emissions)		EN 61000-6-3 (Generic Residential) EN 61204-3 (Low Voltage Power Supplies) EN 50121-3-2 (EMC for Rolling Stock) EN 50121-4 (Railway Application Signalling)
	- Conducted Emissions	EN 55011 class A (internal filter) EN 55011 class B (internal filter) EN 55032 class A (internal filter) EN 55032 class B (internal filter)
	- Radiated Emissions	EN 55011 class A (internal filter) EN 55011 class B (internal filter) EN 55032 class A (internal filter) EN 55032 class B (internal filter)
	- Harmonic Current Emissions	EN 61000-3-2, class A

All specifications valid at 230 VAC, resistive full load and +25°C after warm-up time, unless otherwise stated.

Downloaded from Arrow.com.

EMS (Immunity)			EN 61000-6-2 (Generic Industrial) EN 61204-3 (Low Voltage Power Supplies) EN 50121-3-2 (EMC for Rolling Stock) EN 50121-4 (Railway Application Signalling)
	- Electrostatic Discharge	Air:	EN 61000-4-2, ±8 kV, perf. criteria A
		Contact:	EN 61000-4-2, ±4 kV, perf. criteria A
	- RF Electromagnetic Field		EN 61000-4-3, 10 V/m, perf. criteria A
	- EFT (Burst) / Surge		EN 61000-4-4, ±2 kV, perf. criteria B
		L to L:	EN 61000-4-5, ±1 kV, perf. criteria B
		L to PE:	EN 61000-4-5, ±2 kV, perf. criteria B
	- Conducted RF Disturbances		EN 61000-4-6, 10 Vrms, perf. criteria A
	- PF Magnetic Field	Continuous:	EN 61000-4-8, 30 A/m, perf. criteria A
	- Voltage Dips & Interruptions	230 VAC / 50 Hz:	EN 61000-4-11 20%, 250 periods, perf. criteria C 30%, 25 periods, perf. criteria C 60%, 10 periods, perf. criteria C >95%, 1 period, perf. criteria B >95%, 5 periods, perf. criteria C
		115 VAC / 60 Hz:	EN 61000-4-11 20%, 250 periods, perf. criteria C 30%, 25 periods, perf. criteria C 60%, 10 periods, perf. criteria C >95%, 1 period, perf. criteria B >95%, 5 periods, perf. criteria C
	- Voltage Sag Immunity		SEMI F47, criteria A
EMC / Environmental	- Certification Documents		www.tracopower.com/tib080-ex-emc-cert/

General Specifications

Relative Humidity		95% max. (non condensing)
Temperature Ranges	- Operating Temperature	−40°C to +70°C
Power Derating	- High Temperature	2.0 %/K above 60°C (at standard operation) 3.0 %/K above 60°C (at peak power mode)
	- Low Input Voltage	3.0 %/V below 90 VAC (at standard operation) 1.5 %/V below 100 VAC (at peak power mode) 1.0 %/V below 100 VDC (for DC models)
Over Temperature Protection Switch Off	- Protection Mode	Latch off
Cooling System		Natural convection (20 LFM)
Altitude During Operation		2'000 m max.
Regulator Topology		Flyback Converter
Switching Frequency		60 - 75 kHz (PWM)
Insulation System		Reinforced Insulation
Isolation Test Voltage	- Input to Output, 60 s	3'000 VAC
	- Input to Case or PE, 60 s	1'500 VAC
	- Output to Case or PE, 60 s	750 VDC
Creepage	- Input to Output	8 mm min.
	- Input to Case or PE	4 mm min.
	- Output to Case or PE	1.5 mm min.
Clearance	- Input to Output	8 mm min.
	- Input to Case or PE	4 mm min.
	- Output to Case or PE	1.5 mm min.
Isolation Resistance	- Input to Output, 500 VDC	4'000 MΩ min.
Leakage Current	- Earth Leakage Current	3500 µA max.
	- Touch Current	310 µA max.
Reliability	- Calculated MTBF	1'950'000 h (IEC 61709)

All specifications valid at 230 VAC, resistive full load and +25°C after warm-up time, unless otherwise stated.

Downloaded from Arrow.com.

Environment	- Vibration		EN 61373 IEC 60068-2-6 2 g, 3 axis, sine sweep, 10-55 Hz, 11 oct/min
	- Mechanical Shock		EN 61373 IEC 60068-2-27 25 g, 3 axis, half sine, 11 ms
Housing Material			Aluminum (Chassis) Stainless Steel (Cover)
Housing Type			Metal Case
Mounting Type			DIN-Rail Mount (EN 60715 - 35x7.5mm/35x15mm)
Connection Type			Screw Terminal
Weight			367 g
Thermal Impedance	- Case to Ambient		1.81 K/W typ.
Power Back Immunity		12 VDC model:	19 V max.
		24 VDC model:	35 V max.
		48 VDC model:	60 V max.
			(When external voltage is supplied above set output voltage and below OVP threshold, the power supply will function normally without switch off or destruction, even if external voltage is applied continuously.)
Power OK Signal			Relay Output
	- Trigger Threshold	12 VDC model:	10.5 - 11.1 VDC
		24 VDC model:	21 - 23 VDC
		48 VDC model:	42 - 46 VDC
	- Power OK		Relay contact closed
	- Power Off		Relay contact open
	- Pin Specifications		30 VDC / 1 A max.
Status Indicator			Also indicated by green LEDs: front and side
Environmental Compliance	- REACH Declaration		www.tracopower.com/info/reach-declaration.pdf REACH SVHC list compliant REACH Annex XVII compliant
	- RoHS Declaration		www.tracopower.com/info/rohs-declaration.pdf Exemptions: 7(a), 7(c)-I (RoHS exemptions refer to the component concentration only, not to the overall concentration in the product (O5A rule).)
	- SCIP Reference Number		b3947976-1fbc-464a-a2e2-eda4f0fd1858

Additional Information

Supporting Documents	www.tracopower.com/overview/tib080-ex
Frequently Asked Questions	www.tracopower.com/glossary-faq
Glossary	www.tracopower.com/info/glossary.pdf
Service Portal	www.tracoserviceportal.com

All specifications valid at 230 VAC, resistive full load and +25°C after warm-up time, unless otherwise stated.

Downloaded from Arrow.com.

Blockdiagram

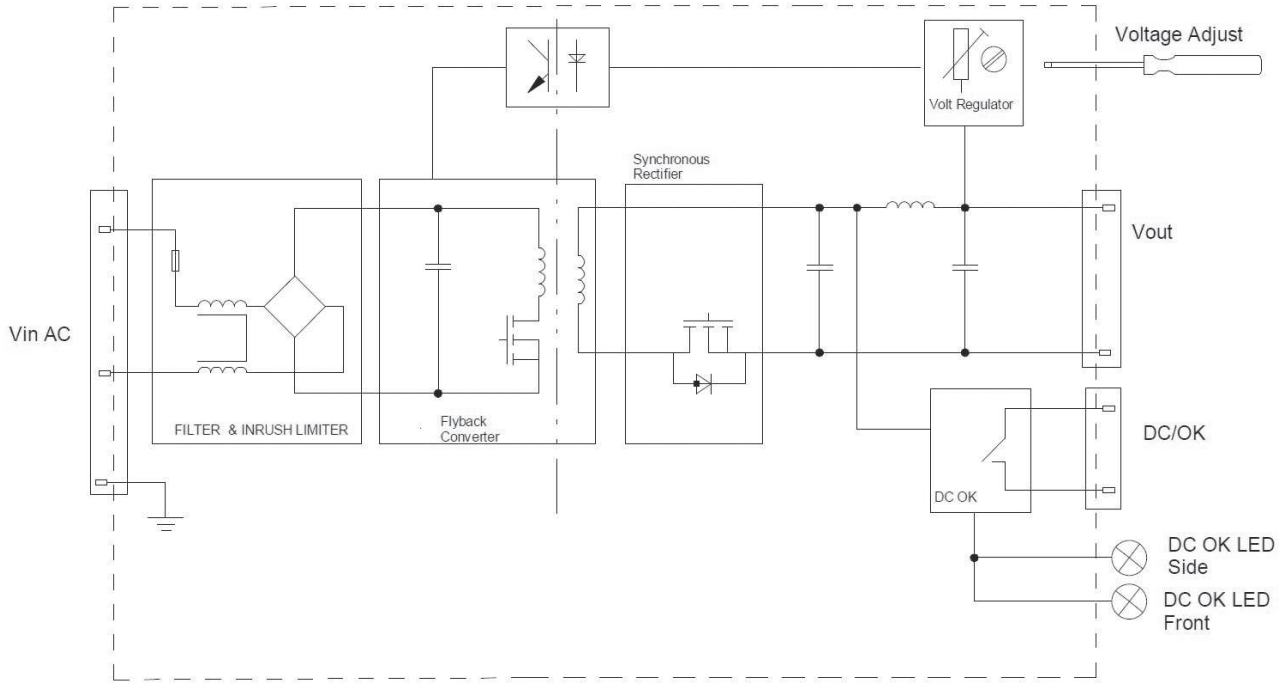

Outline Dimensions

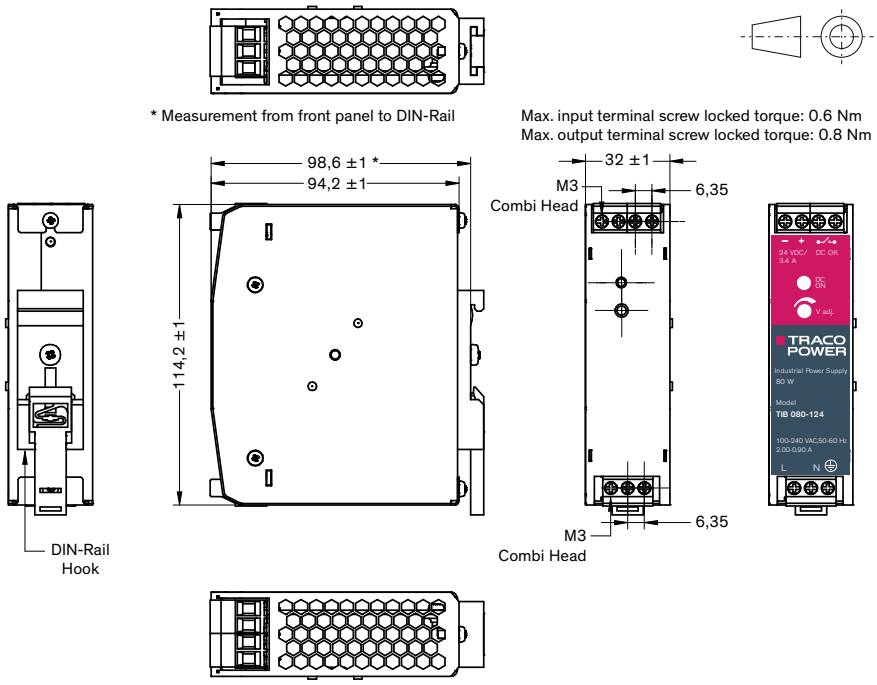

All specifications valid at 230 VAC, resistive full load and +25°C after warm-up time, unless otherwise stated.

Downloaded from Arrow.com.

Alternative side mounting

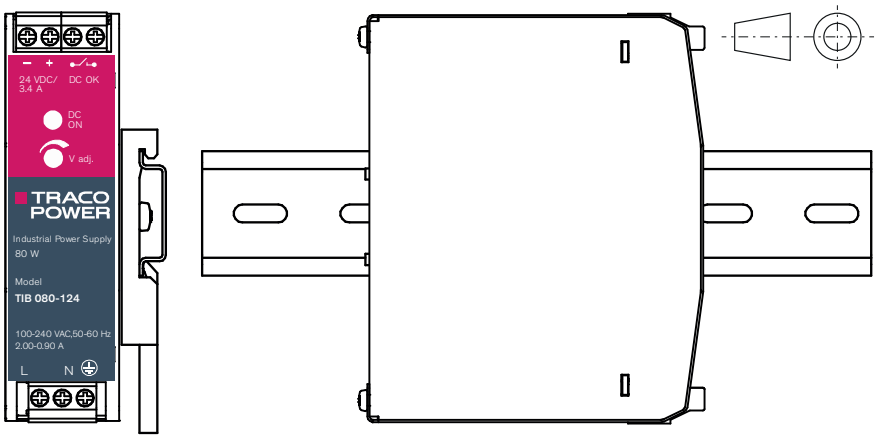

© Copyright 2026 Traco Electronic AG

Downloaded from Arrow.com.