REVISIONS					
REV	ECO	DESCRIPTION	DATE	BY	APPR
A1	--	RELEASE NEW DRAWING	26/SEP/18	ROOKIE	TOMMY

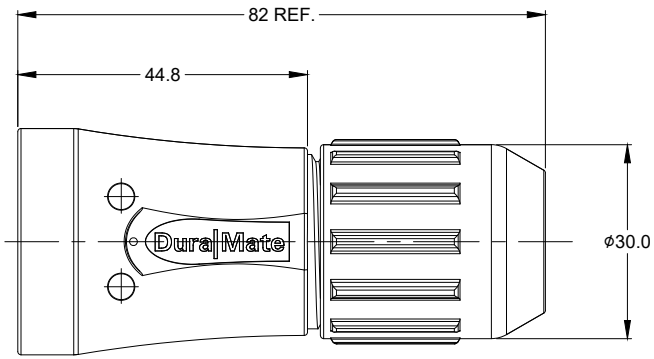

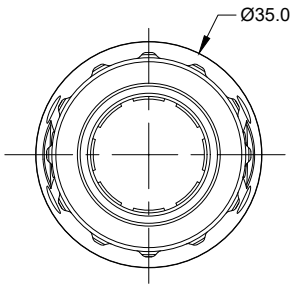

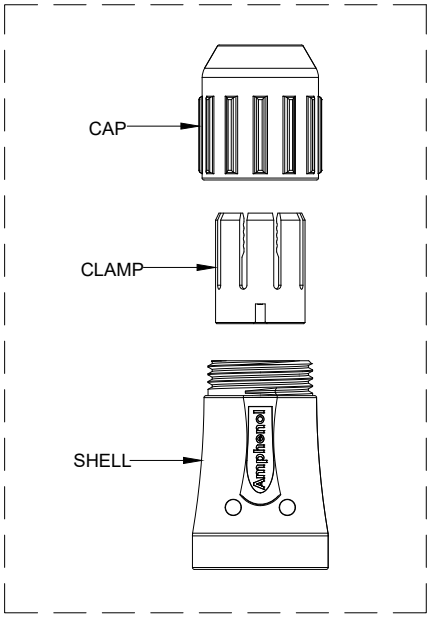

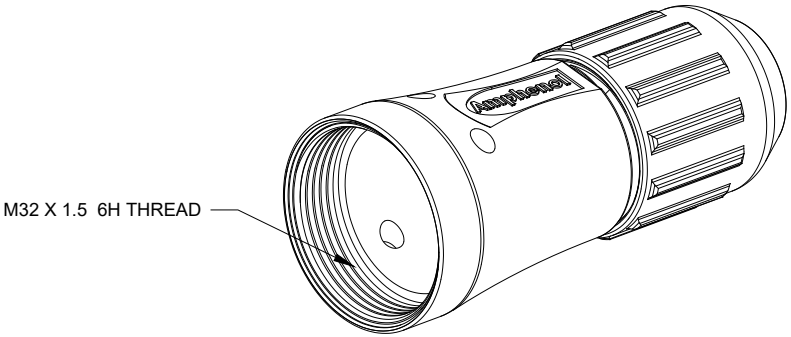

NOTES: UNLESS OTHERWISE SPECIFIED

1. MATERIAL:
   SHELL: ALUMINIUM ALLOY, NICKEL PLATED;
   CAP AND CLAMP: THERMOPLASTIC.

2. USE WITH AHDM SERIES SIZE 18 MODIFICATION .

3. APPLY TO CABLE OD SIZE: ϕ14.5~ϕ18.0 .

4. RoHS COMPLIANT.

5. ALL DIMENSIONS ARE FOR REFERENCE USE ONLY.

QUANTITY	PART NUMBER	DESCRIPTION	ITEM
	AHDMBS-18-002		

MATERIALS LIST

UNLESS OTHERWISE SPECIFIED
1) All dimensions are in metric(mm).
2) Tolerances are as follows:
1 PL DEC ±0.30
2 PL DEC ±0.15
3 PL DEC ±0.08
Fractions ±1/64
Angles ±1°
3) Note reference = X

MATERIAL SPECIFICATIONS:

PROCESS SPECIFICATIONS:

NEXT ASS'Y:

SIGNATURES		DATE
DRAWN:	ROOKIE	26/SEP/18
CHECKED:	ORION	26/SEP/18
ENGINEER:		
APPROVAL:	TOMMY	26/SEP/18
CUSTOMER:		

THIS DRAWING IS SUPPLIED FOR INFORMATION ONLY. DESIGN FEATURES, SPECIFICATIONS AND PERFORMANCE DATA SHOWN HEREON ARE THE PROPERTY OF THE AMPHENOL CORPORATION. NO RIGHTS OF REPRODUCTION ARE IMPLIED. ALL DIMENSIONS ARE SUBJECT TO NORMAL MANUFACTURING VARIATIONS.

Amphenol

Sine Systems - www.amphenol-sine.com
44724 Morley Drive
Clinton Township, MI 48036

BACKSHELL, 18 SZ, AHDM

SIZE	TYPE	DWG NO:	REVISION
B	C-	AHDMBS-18-002	A1

SCALE: NONE SHEET 1 OF 1

TITLE: BACKSHELL, 18 SZ, AHDM
DWG NO: AHDMBS-18-002
REV: A1
SH: 1
OF: 1

Downloaded from Arrow.com.