PART NUMBER	LED COLOR (nm)
5988B10102F	RED (623)
5988B10107F	
5988B30102F	ORANGE (605)
5988B30107F	
5988B40102F	YELLOW (590)
5988B40107F	
5988B60102F	YELLOW GREEN (570)
5988B60107F	
5988B80102F	GREEN (525)
5988B80107F	
5988B90102F	BLUE (470)
5988B90107F	

NOTES:
1. PIN NUMBERS ARE FOR REFERENCE ONLY, DESIGNATION NON-EXISTENT ON PART.
2. LABELING FOR REEL AND OUTSIDE OF ALUMINUM BAG, DIALIGHT P/N, QUANTITY PER REEL, DATE CODE, INTENSITY BIN CODE, LOT NUMBER AND COUNTRY OF ORIGIN
3. THIS PRODUCT IS RoHS COMPLIANT. EACH BAG IS TO BE MARKED WITH RoHS COMPLIANT LABEL OR EQUIVALENT MARKINGS. LED MUST BE Pb FREE.
4. MOISTURE SENSITIVITY LEVEL 3
5. QUANTITY IS 2000 PCS/ REEL

REV	REVISIONS	DRN	APP	DATE
A	NEW RELEASE	LD	NO	1-9-19
B	ADDED VIEWING ANGLE, REVISED FORWARD VOLTAGE	LD	NO	7-31-19
C	DERATING VALUE WAS .56	LD	NO	9-20-19

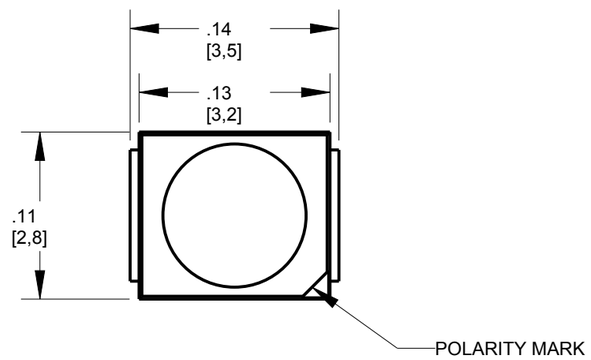

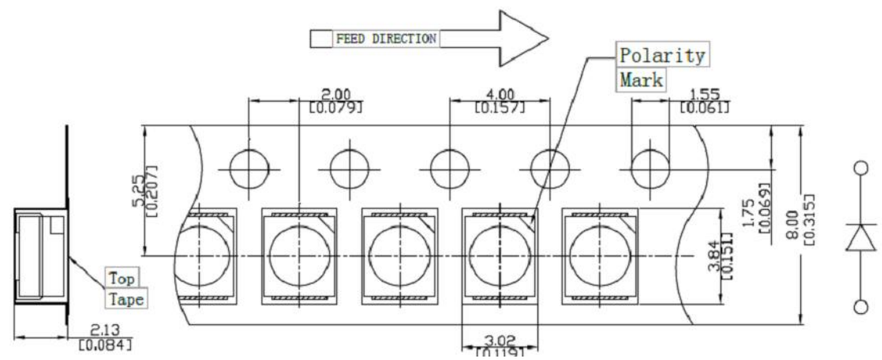

UNITS: mm
TOLERANCE (UNLESS OTHERWISE SPECIFIED): ±0.2mm

TAPING SPECIFICATIONS

RECOMMENDED RoHS SOLDER PROFILE

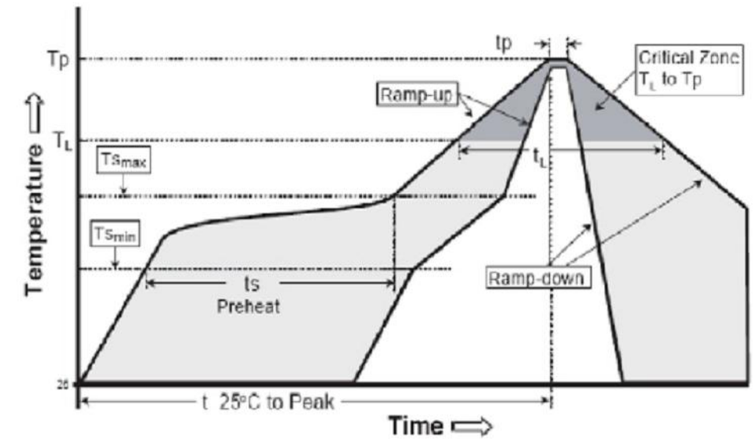

MARK	DEFINITION	CONDITION
TS_{max}	Maximum of pre-heating temperature	200°C
TS_{min}	Minimum of pre-heating temperature	150°C
T_s	Time form Tsmin to Tsmax	60-120 sec
T_L	Reference temperature	217°C
t_L	Retention time for TL	within 60s
T_P	Peak Temperature	260°C
t_P	Time for peak temperature	within 10s
DTr/Dt	Temperature rising rate	under 3°C/sec
DTd/Dt	Temperature decreasing rate	under -3°C/sec

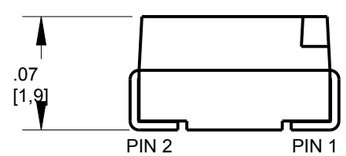

ABSOLUTE MAXIMUM RATINGS AT 25 °C							
LED COLOR	POWER DISSIPATON (mW)	FORWARD CURRENT (mA)	PEAK FORWARD CURRENT (mA)	REVERSE VOLTAGE (V)	OPERATING TEMPRATURE (°C)	STORAGE TEMPRATURE (°C)	DERATING CURVE FROM 45°C (mA/°C)
RED	72	30	100	5	-40 TO +85	-40 TO +100	.625
ORANGE	72						.625
YELLOW	72						.625
YELLOW GREEN	72						.625
GREEN	100						.625
BLUE	100						.625

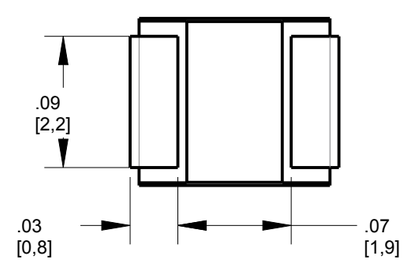

OPERATING CHARACTERISTICS AT 25 °C											
LED COLOR		LUMINOUS INTENSITY (mcd)			DOMINANT WAVELENGTH (nm)			REVERSE CURRENT	FORWARD VOLTAGE		VIEWING ANGLE (DEG)
	IF (mA)	MIN.	TYP.	MAX.	MIN	TYP.	MAX	MAX	TYP.	MAX.	
RED	20	200	380	560	615	623	630	10µA @ VR=5V	1.8	2.4	120
ORANGE		260	345	430	600	605	610		1.8	2.4	
YELLOW		200	315	430	585	590	595		1.8	2.4	
YELLOW GREEN		40	80	120	565	570	575		1.8	2.4	
GREEN		1200	1750	2300	520	525	530		2.8	3.5	
BLUE		230	395	560	465	470	475		2.8	3.5	

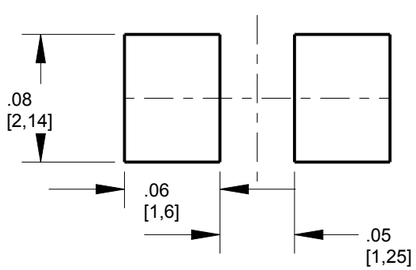

RECOMMENDED SOLDER PAD LAYOUT

LED SCHEMATIC

ATTENTION:
OBSERVE PRECAUTIONS FOR HANDLING ELECTROSTATIC SENSITIVE DEVICES

THIS DRAWING AND THE CONTENTS HEREIN ARE CONFIDENTIAL AND THE SOLE PROPERTY OF DIALIGHT CORP. REPRODUCTION OF THIS DRAWING OR CONSTRUCTION OF ANY PARTS WITHIN THIS DRAWING ARE FORBIDDEN WITHOUT THE WRITTEN CONSENT OF DIALIGHT CORP.

SCALE: 10.00
ALL DIM's: INCH (mm)
TOLERANCES:
UNLESS OTHERWISE SPECIFIED
FRACTIONS: ±1/64
DECIMALS (.XX): ±.01
DECIMALS (.XXX): ±.008
ANGLES: ±1°
FINISH: -
FSCM 83330

DRAWING NUMBER: C-18404
REV: C
TITLE: 3528 PACKAGE
MATERIAL: -

Dialight
1501 ROUTE 34 SOUTH
FARMINGDALE, NJ 07727
(732) 919-3119
www.dialight.com

SHEET 1 OF 1
FAMILY TABLE:

Downloaded from Arrow.com.