Alle Rechte vorbehalten/ *All rights reserved*

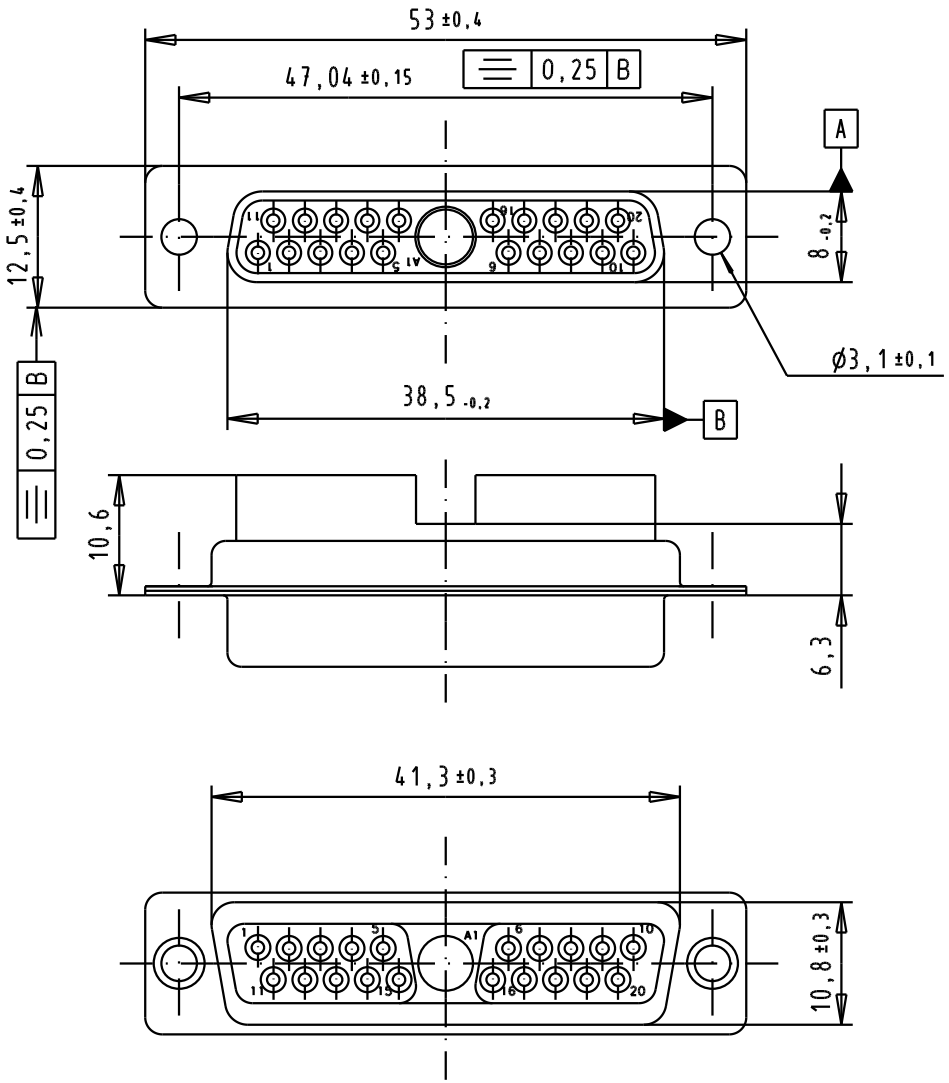

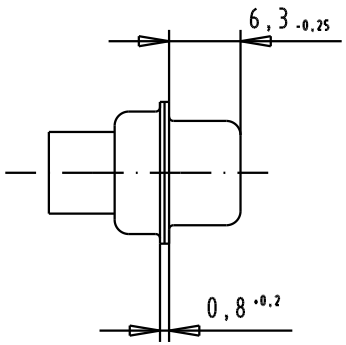

Panel Cutout

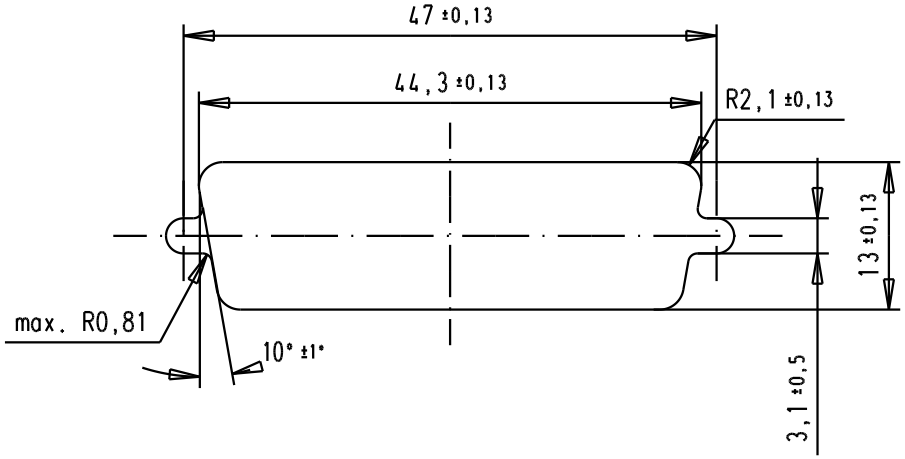

				Dat.	Name			Maßstab/ *Scale*
			Detail.	29/11/04	TR	All Dim. in mm Orig. Size DIN A 4	D-sub, straight, female, 21W1, for data crimp contacts	1,5:1
			Insp.					
			Stand.					
32483	29/11/04	TR	HARTING EURL F-95972 Paris				TB 09 69 302 0211	Blatt/ *Page* 1/1
Mod.	Dat.	Name					Sub.	

Downloaded from Arrow.com.