© 2021 TE Connectivity. All Rights Reserved.

REVISIONS					
P	LTR	DESCRIPTION	DATE	DWN	APVD
	A2	UPDATE DIM DESCRIPTION WITH MSA	03NOV2023	RY	SZ
	A3	ADD SOLDER TAIL FINISH DESCRIPTION	23SEP2024	RY	SZ
	A4	ADD 2-2 & FINISH DESCRIPTION NO. 6	12SEP2025	SH	SZ
	A5	REVISED PER ECN-25-358637	13OCT2025	SH	SZ

1. HOUSING, OVERMOLDS, ORGANIZER MATERIAL:
   GLASS FILLED LCP (BLACK). UL 94 V-0 RATED. E28476.
   CONTACT MATERIAL: COPPER ALLOY.
2. CONTACT MATING FINISH: GOLD FINISH; SOLDER TAILS FINISH: TIN
3. CONTACT MATING FINISH: GOLD OVER PALLADIUM NICKEL; SOLDER TAILS FINISH: TIN
4. DATUMS AND BASIC DIMENSIONS DETERMINED BY CUSTOMER.
5. DATE CODE LASER MARKED APPROXIMATELY WHERE SHOWN.
6. CONTACT MATING FINISH: GOLD FINISH; SOLDER TAILS FINISH: TIN
   SOLDER HOLD DOWN FINISH: NICKEL WITH TIN

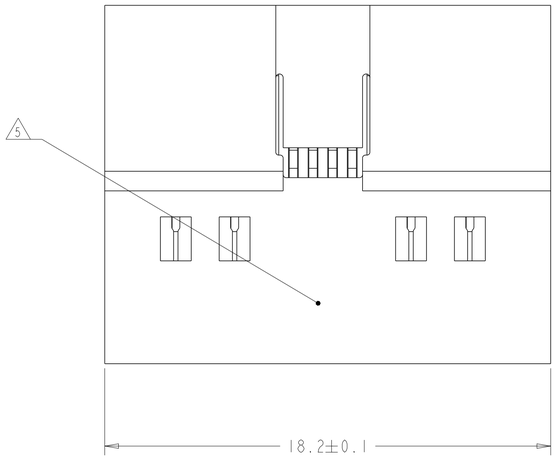

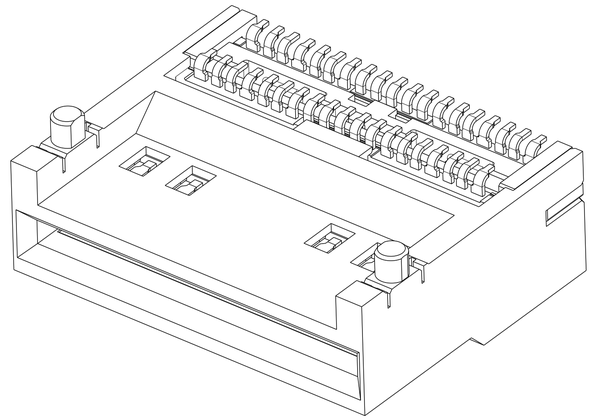

2372928-1 AND -3
SCALE 8:1

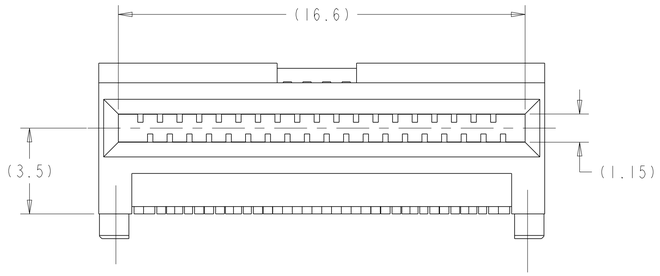

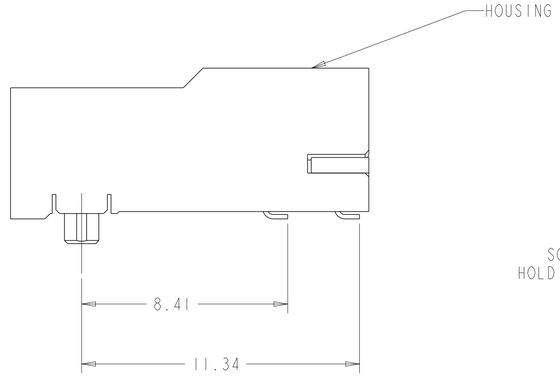

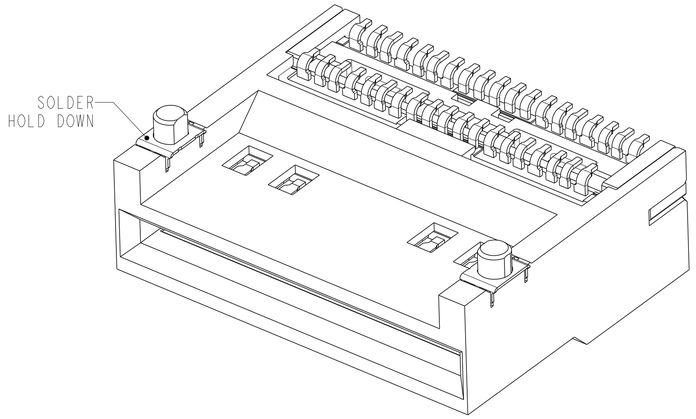

2372928-2, -4 AND 2-2
SCALE 8:1

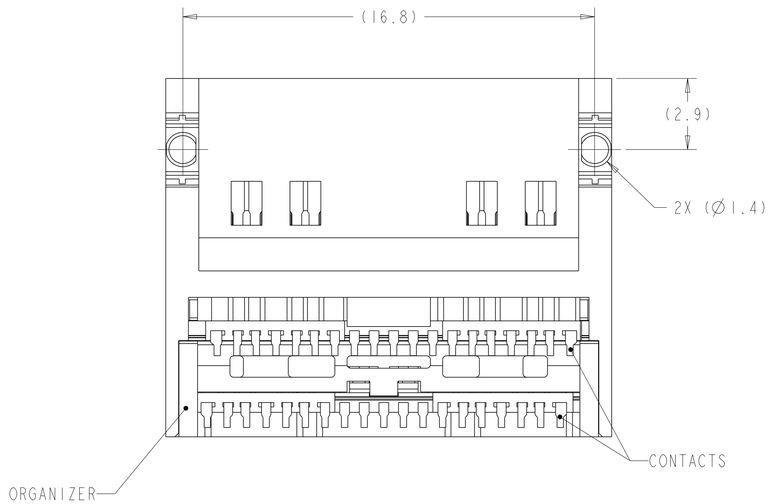

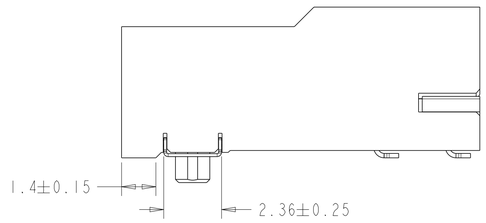

RIGHT VIEW FOR 2372928-2, -4 AND 2-2

A4

CONTACT FINISH	SOLDER HOLD DOWN	PART NUMBER
6	YES	2-2372928-2
3	YES	2372928-4
	NO	2372928-3
2	YES	2372928-2
	NO	2372928-1

THIS DRAWING IS A CONTROLLED DOCUMENT.

DIMENSIONS: mm

TOLERANCES UNLESS OTHERWISE SPECIFIED:
0 PLC ±0.2
1 PLC ±0.2
2 PLC ±0.2
3 PLC ±0.2
4 PLC ±
ANGLES ±

MATERIAL 1

FINISH SEE TABLE

DWN RICHARD YU 06APR2023
CHK E. BRIANT 27JAN2021
APVD SUNY ZHAO 06APR2023
PRODUCT SPEC 108-160225
APPLICATION SPEC 114-160199
WEIGHT -

TE Connectivity

NAME QSFP112 RECEPTACLE ASSEMBLY

SIZE	CAGE CODE	DRAWING NO	RESTRICTED TO
A1	00779	C-2372928	-

CUSTOMER DRAWING | SCALE 8:1 | SHEET 1 OF 2 | REV A5

4805 (3/13)

Downloaded from Arrow.com.

© 2021 TE Connectivity. All Rights Reserved.

REVISIONS					
P	LTR	DESCRIPTION	DATE	DWN	APVD
	-	SEE SHEET 1	-	-	-

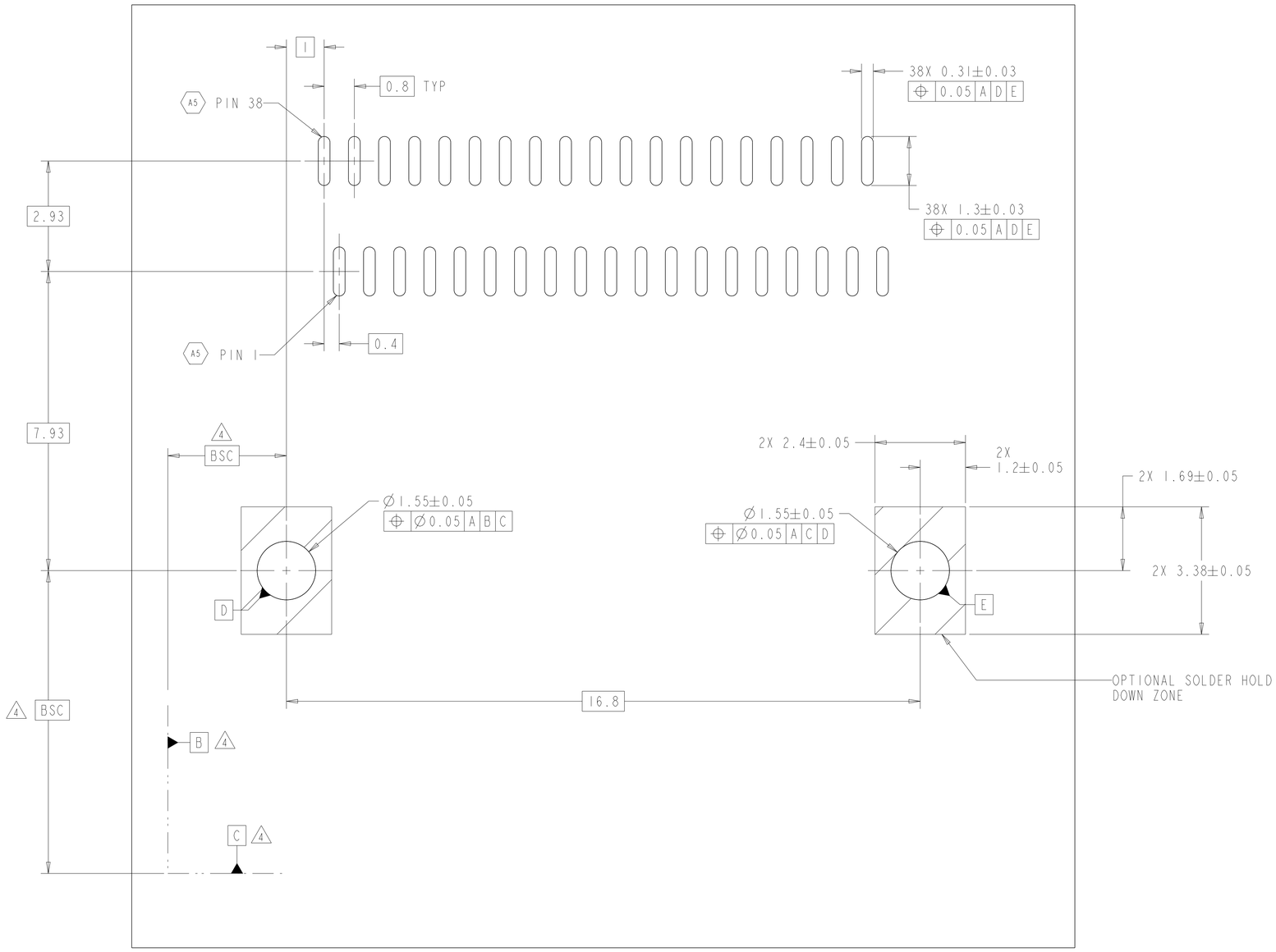

THIS DRAWING IS A CONTROLLED DOCUMENT.

DIMENSIONS: mm

TOLERANCES UNLESS OTHERWISE SPECIFIED:
0 PLC ±0.2
1 PLC ±0.2
2 PLC ±0.2
3 PLC ±0.2
4 PLC ±
ANGLES ±

MATERIAL

FINISH: SEE TABLE

DWN: RICHARD YU 06APR2023
CHK: E. BRIANT 27JAN2021
APVD: SUNY ZHAO 06APR2023

PRODUCT SPEC: 108-160225
APPLICATION SPEC: 114-160199
WEIGHT: -

TE Connectivity

NAME: OSFP112 RECEPTACLE ASSEMBLY

SIZE	CAGE CODE	DRAWING NO	RESTRICTED TO
A1	00779	C-2372928	-

CUSTOMER DRAWING | SCALE 8:1 | SHEET 2 OF 2 | REV A5

4805 (3/13)

Downloaded from Arrow.com.