D.C. Reactors or filter chokes *153-159 Series*

Low to medium current









RoHS

Features

- Economical "open bracket" channel mount.
- Tolerance of 15% on both inductance & resistance.
- Inductances measured at rated D.C. current.
- Minimum 5" long leads.
- Units will exhibit less inductance at slightly higher currents or more inductance at lower currents.
- Perfect for high voltage power supply filtering.
- Every unit is Hipot tested (100%) at 1,500 VAC
- Units are vacuum impregnated with polyurethane varnish for quiet operation and long life.
- For more sizes and voltages in enclosed-type design, refer to our **193 Series**.

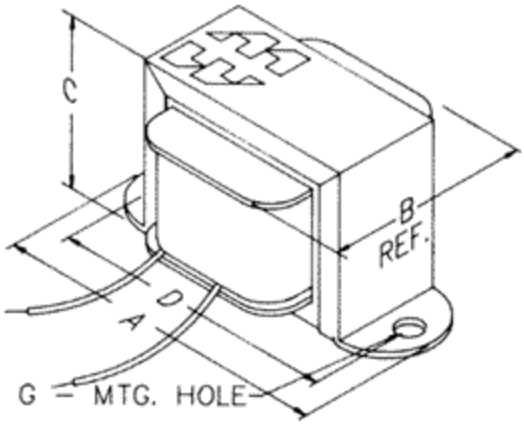

Part No.	Inductance +/- 15% (mH)	D.C. Current	Resistance +/- 15% (Ohms)	Maximum Operating Volts (D.C.)	Weight (lbs.)	Dim. Ref.
157D	1mH	10 A	0.038	400	1	C9H
156B	1.5mH	5 A	0.07	400	0.5	C6H
159ZL	2.5mH	10 A	0.044	500	2.75	C14H
154B	3mH	1.5 A	0.14	300	0.25	C2H
155B	6mH	2 A	0.3	400	0.3	C4H
157E	6mH	4 A	0.133	500	1	C9H
159ZJ	10mH	5 A	0.16	500	2.75	C14H
159ZG	15mH	4 A	0.25	500	2.75	C14H
159ZE	28mH	3 A	0.43	500	2.75	C14H
159ZC	60mH	2 A	0.7	500	2.5	C14H
159ZA	300mH	1 A	6	500	2.5	C14H
159ZB	320mH	600 ma.	7.8	400	1.5	C10H
155T	0.5H	300 ma.	30	400	0.5	C4H
153M	0.6H	100 ma.	86	300	0.1	C1H
159Y	0.6H	750 ma.	11	500	2.25	C14H
153L	0.9H	75 ma.	125	300	0.1	C1H
158SA	1.0H	240 ma.	41	400	0.5	C6H
158T	1.0H	300 ma.	40	400	1.5	C10H
156R	1.5H	200 ma.	56	400	0.5	C6H

Downloaded from Arrow.com.

Part No.	Inductance +/- 15% (mH)	D.C. Current	Resistance +/- 15% (Ohms)	Maximum Operating Volts (D.C.)	Weight (lbs.)	Dim. Ref.
158S	1.5H	250 ma.	60	400	1.5	C10H
158TA	1.5H	300 ma.	40	400	1.7	C12H
159V	1.5H	500 ma.	27	500	2.25	C14H
154M	2H	100 ma.	175	300	0.25	C2H
157R	2H	200 ma.	57	400	1	C9H
153H	2.2H	50 ma.	305	300	0.1	C1H
159T	2.5H	300 ma.	43	500	2.25	C14H
156M	3H	100 ma.	86	400	0.5	C6H
157Q	3.5H	150 ma.	98	400	1	C9H
154H	4H	50 ma.	300	300	0.25	C2H
159S	4H	225 ma.	65	500	2.25	C14H
155H	5H	50 ma.	270	400	0.3	C4H
156L	5H	75 ma.	135	400	0.5	C6H
158Q	5H	150 ma.	105	400	1.25	C10H
159R	6H	200 ma.	150	500	2.2	C14H
153E	7H	25 ma.	770	300	0.1	C1H
155G	7H	40 ma.	340	400	0.3	C4H
156LA	7H	75 ma.	241	400	1.1	C9H
159Q	7H	150 ma.	100	500	2.25	C14H
157M	8H	100 ma.	259	400	1	C9H
154G	9H	40 ma.	700	300	0.25	C2H
156G	9H	40 ma.	300	400	0.5	C6H
157H	10H	50 ma.	408	500	0.5	C6H
157J	10H	65 ma.	205	400	1	C9H
158M	10H	100 ma.	195	400	1.25	C10H
159P	10H	125 ma.	155	500	2.25	C14H
157L	14H	75 ma.	429	400	1	C9H
154EA	15H	20 ma.	966	500	0.25	C2H
155J	15H	30 ma.	1026	400	0.3	C4H
158L	15H	75 ma.	411	400	1.25	C10H
159M	15H	100 ma.	256	500	2.25	C14H
154E	20H	20 ma.	1666	300	0.25	C2H
157G	30H	40 ma.	595	400	1	C9H
155C	60H	8 ma.	2750	400	0.3	C4H
156C	150H	8 ma.	3700	400	0.5	C6H

Mechanical Data

	Dimensions				
Mtg. Style	**A**	**B**	**C**	**D**	**Mtg. Hole**
C1H	1.63	0.88	0.81	1.38	0.12
C2H	2.06	1.25	1.19	1.75	0.19
C4H	2.38	1.38	1.38	2.00	0.19
C6H	2.81	1.50	1.69	2.38	0.19
C9H	3.25	1.75	2.00	2.81	0.19
C10H	3.25	1.88	2.00	2.81	0.19
C12H	3.69	2.00	2.31	3.13	0.19
C14H	4.03	2.25	2.63	3.56	0.19

Tags: **choke**, **filter choke**, **dc reactor**, **inductance**, **open frame**

Data subject to change without notice.

© 2026. Hammond Manufacturing Ltd. All rights reserved.

Downloaded from Arrow.com.