Decade Counter

MC14017B

The MC14017B is a five-stage Johnson decade counter with built-in code converter. High speed operation and spike-free outputs are obtained by use of a Johnson decade counter design. The ten decoded outputs are normally low, and go high only at their appropriate decimal time period. The output changes occur on the positive-going edge of the clock pulse. This part can be used in frequency division applications as well as decade counter or decimal decode display applications.

Features

- Fully Static Operation
- DC Clock Input Circuit Allows Slow Rise Times
- Carry Out Output for Cascading
- Divide-by-N Counting
- Supply Voltage Range = 3.0 Vdc to 18 Vdc
- Capable of Driving Two Low-Power TTL Loads or One Low-Power Schottky TTL Load Over the Rated Temperature Range
- Pin-for-Pin Replacement for CD4017B
- Triple Diode Protection on All Inputs
- NLV Prefix for Automotive and Other Applications Requiring Unique Site and Control Change Requirements; AEC-Q100 Qualified and PPAP Capable
- This Device is Pb-Free and is RoHS Coempliant

MAXIMUM RATINGS (Voltages Referenced to V_{SS})

Symbol	Parameter	Value	Unit
V_{DD}	DC Supply Voltage Range	−0.5 to +18.0	V
V_{in}, V_{out}	Input or Output Voltage Range (DC or Transient)	−0.5 to V_{DD} + 0.5	V
I_{in}, I_{out}	Input or Output Current (DC or Transient) per Pin	±10	mA
P_D	Power Dissipation, per Package (Note 1)	500	mW
T_A	Ambient Temperature Range	−55 to +125	°C
T_{stg}	Storage Temperature Range	−65 to +150	°C
T_L	Lead Temperature (8−Second Soldering)	260	°C

Stresses exceeding those listed in the Maximum Ratings table may damage the device. If any of these limits are exceeded, device functionality should not be assumed, damage may occur and reliability may be affected.

1. Temperature Derating: “D/DW” Packages: −7.0 mW/°C From 65°C To 125°C

This device contains protection circuitry to guard against damage due to high static voltages or electric fields. However, precautions must be taken to avoid applications of any voltage higher than maximum rated voltages to this high−impedance circuit. For proper operation, V_{in} and V_{out} should be constrained to the range $V_{SS} \le (V_{in}$ or $V_{out}) \le V_{DD}$.

Unused inputs must always be tied to an appropriate logic voltage level (e.g., either V_{SS} or V_{DD}). Unused outputs must be left open.

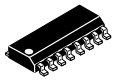

SOIC−16
D SUFFIX
CASE 751B

PIN ASSIGNMENT

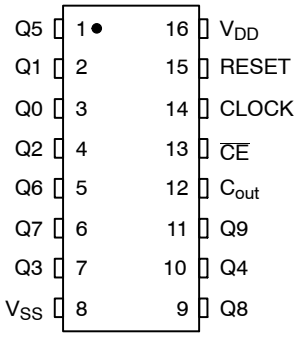

MARKING DIAGRAM

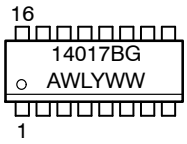

A = Assembly Location
WL, L = Wafer Lot
YY, Y = Year
WW, W = Work Week
G = Pb−Free Indicator

ORDERING INFORMATION

See detailed ordering and shipping information in the package dimensions section on page 7 of this data sheet.

© Semiconductor Components Industries, LLC, 2014

Downloaded from Arrow.com.

FUNCTIONAL TRUTH TABLE
(Positive Logic)

Clock	$\overline{\text{Clock}}$ $\overline{\text{Enable}}$	Reset	Decode Output=n
0	X	0	n
X	1	0	n
X	X	1	Q0
↗	0	0	n+1
↘	X	0	n
X	↗	0	n
1	↘	0	n+1

X = Don't Care. If n < 5 Carry = "1", Otherwise = "0".

BLOCK DIAGRAM

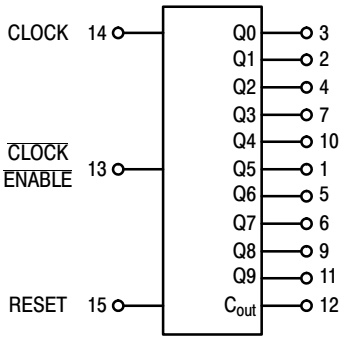

V_{DD} = PIN 16
V_{SS} = PIN 8

LOGIC DIAGRAM

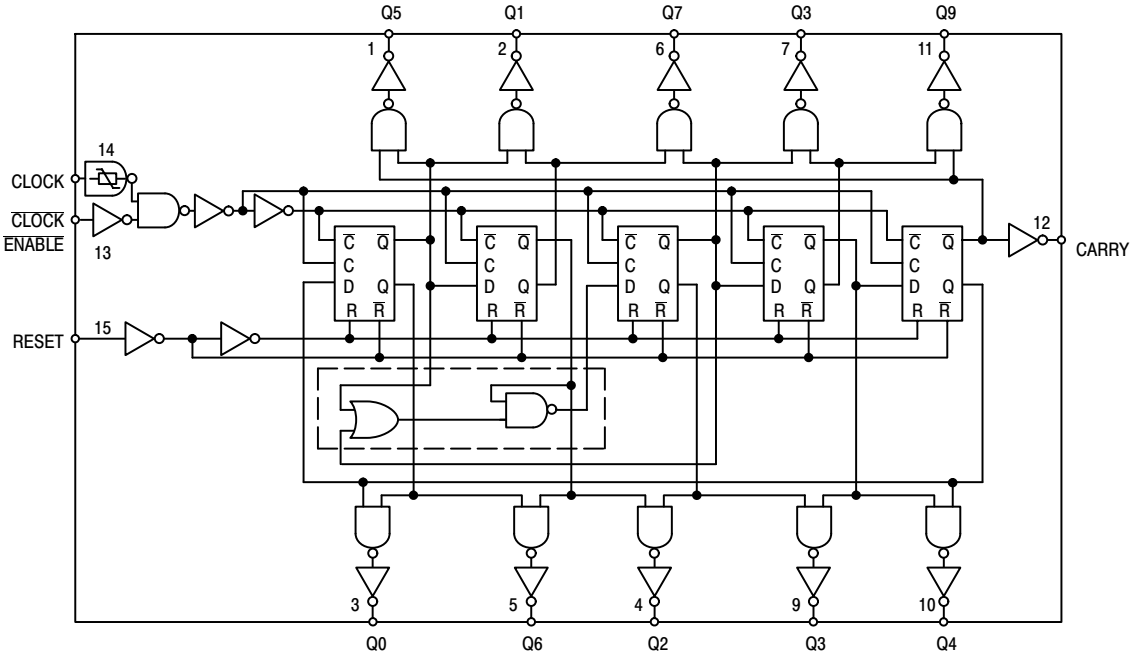

Share Feedback
Your Opinion Matters

Downloaded from Arrow.com.

ELECTRICAL CHARACTERISTICS (Voltages Referenced to V_{SS})

Characteristic	Symbol	V_{DD} Vdc	−55°C Min	−55°C Max	25°C Min	25°C Typ (Note 2)	25°C Max	125°C Min	125°C Max	Unit
Output Voltage “0” Level V_{in} = V_{DD} or 0	V_{OL}	5.0	–	0.05	–	0	0.05	–	0.05	Vdc
		10	–	0.05	–	0	0.05	–	0.05	
		15	–	0.05	–	0	0.05	–	0.05	
“1” Level V_{in} = 0 or V_{DD}	V_{OH}	5.0	4.95	–	4.95	5.0	–	4.95	–	Vdc
		10	9.95	–	9.95	10	–	9.95	–	
		15	14.95	–	14.95	15	–	14.95	–	
Input Voltage “0” Level	V_{IL}									Vdc
(V_O = 4.5 or 0.5 Vdc)		5.0	–	1.5	–	2.25	1.5	–	1.5	
(V_O = 9.0 or 1.0 Vdc)		10	–	3.0	–	4.50	3.0	–	3.0	
(V_O = 13.5 or 1.5 Vdc)		15	–	4.0	–	6.75	4.0	–	4.0	
“1” Level	V_{IH}									Vdc
(V_O = 0.5 or 4.5 Vdc)		5.0	3.5	–	3.5	2.75	–	3.5	–	
(V_O = 1.0 or 9.0 Vdc)		10	7.0	–	7.0	5.50	–	7.0	–	
(V_O = 1.5 or 13.5 Vdc)		15	11	–	11	8.25	–	11	–	
Output Drive Current	I_{OH}									mAdc
(V_{OH} = 2.5 Vdc) Source		5.0	–3.0	–	–2.4	–4.2	–	–1.7	–	
(V_{OH} = 4.6 Vdc)		5.0	–0.64	–	–0.51	–0.88	–	–0.36	–	
(V_{OH} = 9.5 Vdc)		10	–1.6	–	–1.3	–2.25	–	–0.9	–	
(V_{OH} = 13.5 Vdc)		15	–4.2	–	–3.4	–8.8	–	–2.4	–	
(V_{OL} = 0.4 Vdc) Sink	I_{OL}	5.0	0.64	–	0.51	0.88	–	0.36	–	mAdc
(V_{OL} = 0.5 Vdc)		10	1.6	–	1.3	2.25	–	0.9	–	
(V_{OL} = 1.5 Vdc)		15	4.2	–	3.4	8.8	–	2.4	–	
Input Current	I_{in}	15	–	±0.1	–	±0.00001	±0.1	–	±1.0	μAdc
Input Capacitance (V_{in} = 0)	C_{in}	–	–	–	–	5.0	7.5	–	–	pF
Quiescent Current (Per Package)	I_{DD}	5.0	–	5.0	–	0.005	5.0	–	150	μAdc
		10	–	10	–	0.010	10	–	300	
		15	–	20	–	0.015	20	–	600	
Total Supply Current (Notes 3 & 4) (Dynamic plus Quiescent, Per Package) (C_L = 50 pF on all outputs, all buffers switching)	I_T	5.0	I_T = (0.27 μA/kHz) f + I_{DD}							μAdc
		10	I_T = (0.55 μA/kHz) f + I_{DD}							
		15	I_T = (0.83 μA/kHz) f + I_{DD}							

Product parametric performance is indicated in the Electrical Characteristics for the listed test conditions, unless otherwise noted. Product performance may not be indicated by the Electrical Characteristics if operated under different conditions.

2. Data labelled “Typ” is not to be used for design purposes but is intended as an indication of the IC’s potential performance.
3. The formulas given are for the typical characteristics only at 25 °C.
4. To calculate total supply current at loads other than 50 pF:

$$I_T(C_L) = I_T(50\ pF) + (C_L - 50)\ Vfk$$

where: I_T is in μA (per package), C_L in pF, V = (V_{DD} − V_{SS}) in volts, f in kHz is input frequency, and k = 0.0011.

Share Feedback
Your Opinion Matters

Downloaded from Arrow.com.

SWITCHING CHARACTERISTICS (Note 5) (C_L = 50 pF, T_A = 25 °C)

Characteristic	Symbol	V_{DD} Vdc	Min	Typ (Note 6)	Max	Unit
Output Rise and Fall Time	t_{TLH}, t_{THL}					ns
t_{TLH}, t_{THL} = (1.5 ns/pF) C_L + 25 ns		5.0	–	100	200	
t_{TLH}, t_{THL} = (0.75 ns/pF) C_L + 12.5 ns		10	–	50	100	
t_{TLH}, t_{THL} = (0.55 ns/pF) C_L + 9.5 ns		15	–	40	80	
Propagation Delay Time	t_{PLH}, t_{PHL}					ns
Reset to Decode Output						
t_{PLH}, t_{PHL} = (1.7 ns/pF) C_L + 415 ns		5.0	–	500	1000	
t_{PLH}, t_{PHL} = (0.66 ns/PF) C_L + 197 ns		10	–	230	460	
t_{PLH}, t_{PHL} = (0.5 ns/pF) C_L + 150 ns		15	–	175	350	
Propagation Delay Time	t_{PLH}, t_{PHL}					ns
Clock to C_{out}						
t_{PLH}, t_{PHL} = (1.7 ns/pF) C_L + 315 ns		5.0	–	400	800	
t_{PLH}, t_{PHL} = (0.66 ns/pF) C_L + 142 ns		10	–	175	350	
t_{PLH}, t_{PHL} = (0.5 ns/pF) C_L + 100 ns		15	–	125	250	
Propagation Delay Time	t_{PLH}, t_{PHL}					ns
Clock to Decode Output						
t_{PLH}, t_{PHL} = (1.7 ns/pF) C_L + 415 ns		5.0	–	500	1000	
t_{PLH}, t_{PHL} = (0.66 ns/pF) C_L + 197 ns		10	–	230	460	
t_{PLH}, t_{PHL} = (0.5 ns/pF) C_L + 150 ns		15	–	175	350	
Turn−Off Delay Time	t_{PLH}					ns
Reset to C_{out}						
t_{PLH} = (1.7 ns/pF) C_L + 315 ns		5.0	–	400	800	
t_{PLH} = (0.66 ns/pF) C_L + 142 ns		10	–	175	350	
t_{PLH} = (0.5 ns/pF) C_L + 100 ns		15	–	125	250	
Clock Pulse Width	$t_{w(H)}$	5.0	250	125	–	ns
		10	100	50	–	
		15	75	35	–	
Clock Frequency	f_{cl}	5.0	–	5.0	2.0	MHz
		10	–	12	5.0	
		15	–	16	6.7	
Reset Pulse Width	$t_{w(H)}$	5.0	500	250	–	ns
		10	250	125	–	
		15	190	95	–	
Reset Removal Time	t_{rem}	5.0	750	375	–	ns
		10	275	135	–	
		15	210	105	–	
Clock Input Rise and Fall Time	t_{TLH}, t_{THL}	5.0	No Limit			–
		10				
		15				
$\overline{\text{Clock Enable}}$ Setup Time	t_{su}	5.0	350	175	–	ns
		10	150	75	–	
		15	115	52	–	
$\overline{\text{Clock Enable}}$ Removal Time	t_{rem}	5.0	420	260	–	ns
		10	200	100	–	
		15	140	70	–	

5. The formulas given are for the typical characteristics only at 25 °C.
6. Data labelled “Typ” is not to be used for design purposes but is intended as an indication of the IC’s potential performance.

Share Feedback
Your Opinion Matters

Downloaded from Arrow.com.

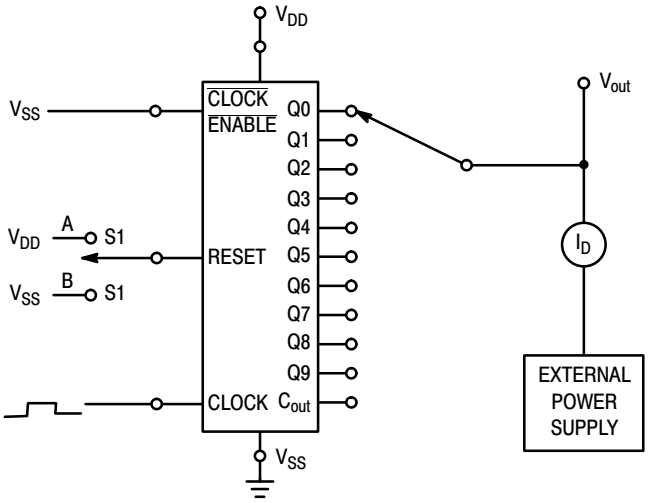

	Output Sink Drive	Output Source Drive
Decode Outputs	(S1 to A)	Clock to desired outputs (S1 to B)
Carry	Clock to 5 thru 9 (S1 to B)	S1 to A
V_{GS} =	V_{DD}	– V_{DD}
V_{DS} =	V_{out}	V_{out} – V_{DD}

Figure 1. Typical Output Source and Output Sink Characteristics Test Circuit

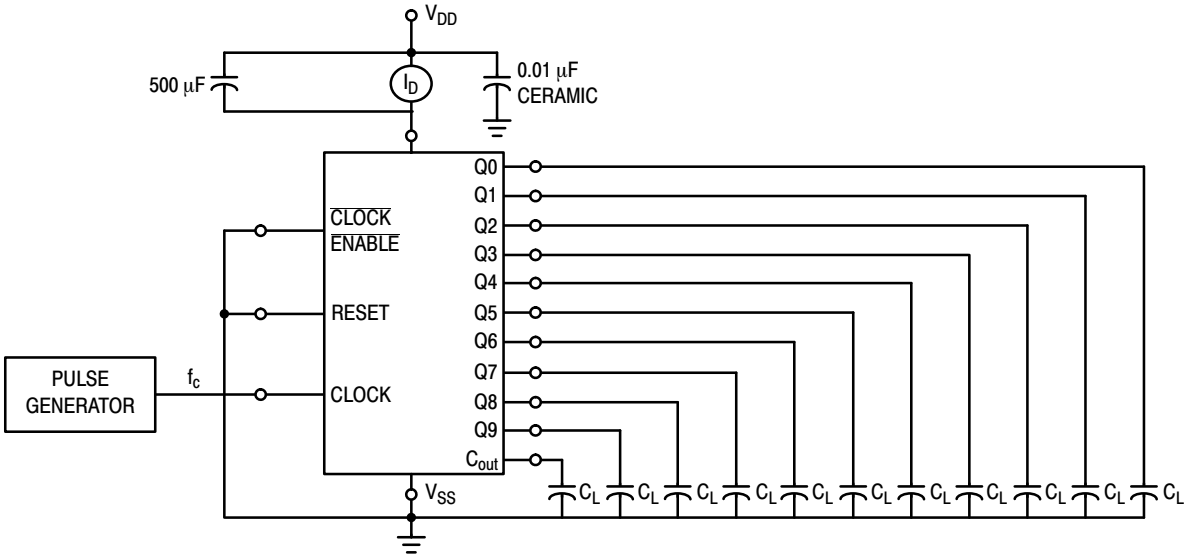

Figure 2. Typical Power Dissipation Test Circuit

Share Feedback
Your Opinion Matters

Downloaded from Arrow.com.

APPLICATIONS INFORMATION

Figure 3 shows a technique for extending the number of decoded output states for the MC14017B. Decoded outputs are sequential within each stage and from stage to stage, with no dead time (except propagation delay).

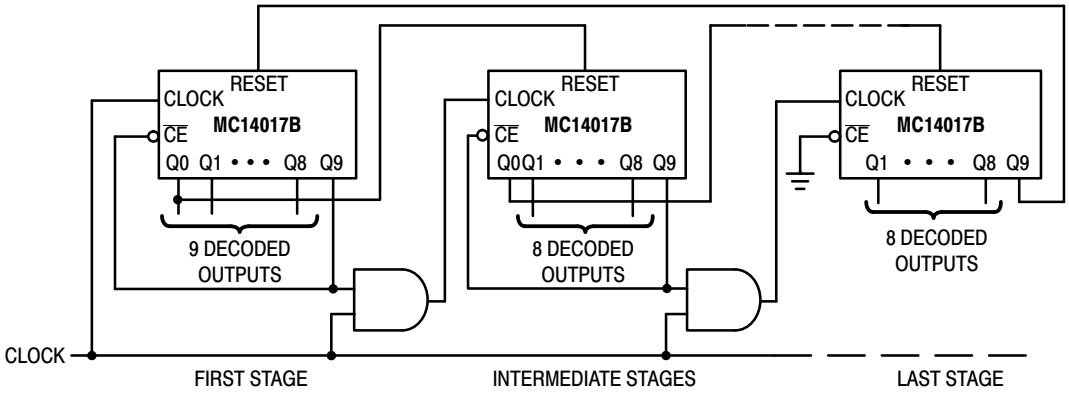

Figure 3. Counter Expansion

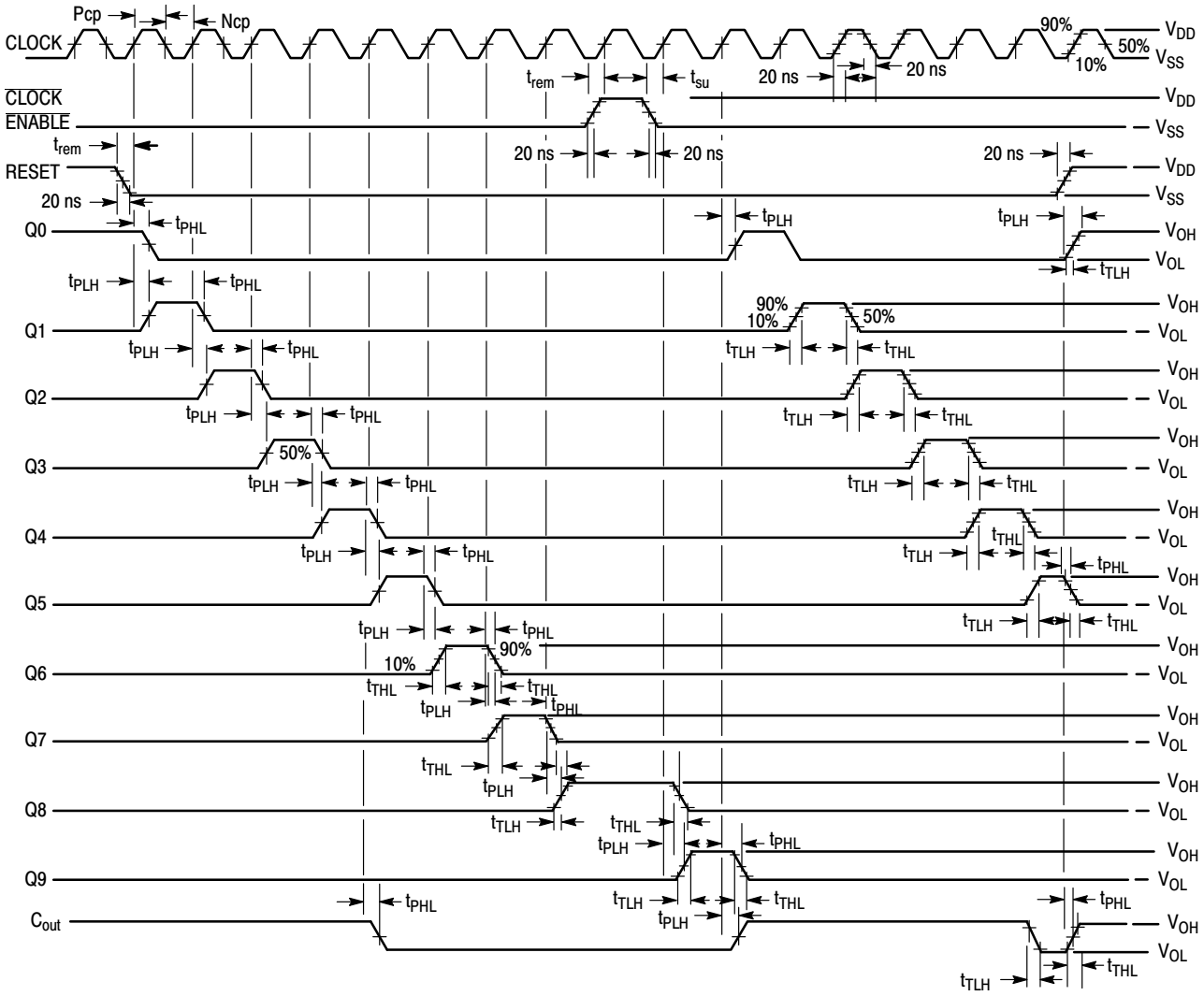

Figure 4. AC Measurement Definition and Functional Waveforms

Share Feedback
Your Opinion Matters

Downloaded from Arrow.com.

ORDERING INFORMATION

Device	Package	Shipping†
MC14017BDG	SOIC−16 (Pb−Free)	48 Units / Rail
MC14017BDR2G	SOIC−16 (Pb−Free)	2500 Units / Tape & Reel
NLV14017BDR2G	SOIC−16 (Pb−Free)	2500 Units / Tape & Reel

DISCONTINUED (Note 7)

Device	Package	Shipping†
NLV14017BDG	SOIC−16 (Pb−Free)	48 Units / Rail

†For information on tape and reel specifications, including part orientation and tape sizes, please refer to our Tape and Reel Packaging Specifications Brochure, BRD8011/D

*NLV Prefix for Automotive and Other Applications Requiring Unique Site and Control Change Requirements; AEC−Q100 Qualified and PPAP Capable.

7. **DISCONTINUED:** This device is not recommended for new design. Please contact your **onsemi** representative for information. The most current information on this device may be available on www.onsemi.com.

Share Feedback
Your Opinion Matters

Downloaded from Arrow.com.

REVISION HISTORY

Revision	Description of Changes	Date
10	NLV14017BDG OPN Marked as Discontinued + Rebranded the Data Sheet to **onsemi** format	8/26/2025

This document has undergone updates prior to the inclusion of this revision history table. The changes tracked here only reflect updates made on the noted approval dates.

Share Feedback
Your Opinion Matters

Downloaded from Arrow.com.

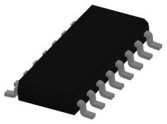

SOIC−16 9.90x3.90x1.37 1.27P
CASE 751B
ISSUE M

DATE 18 OCT 2024

NOTES:
1. DIMENSIONING AND TOLERANCING PER ASME Y14.5M, 2018.
2. DIMENSION IN MILLIMETERS. ANGLE IN DEGREES.
3. DIMENSIONS D AND E1 DO NOT INCLUDE MOLD PROTRUSION.
4. MAXIMUM MOLD PROTRUSION 0.15mm PER SIDE.
5. DIMENSION b DOES NOT INCLUDE DAMBAR PROTRUSION. ALLOWABLE DAMBAR PROTRUSION SHALL BE 0.127mm TOTAL IN EXCESS OF THE b DIMENSION AT MAXIMUM MATERIAL CONDITION.

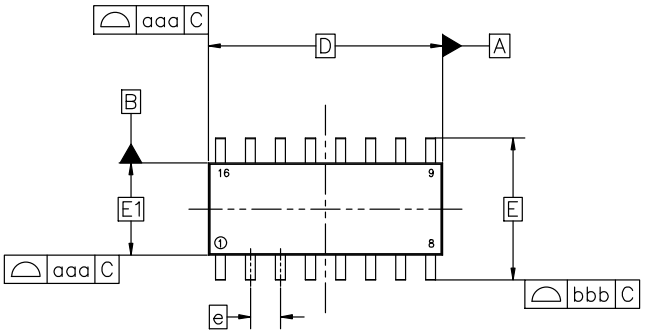

TOP VIEW

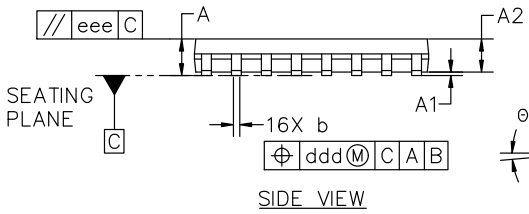

SIDE VIEW

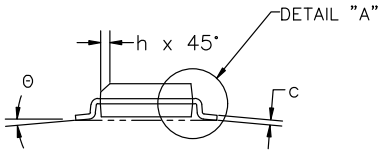

END VIEW

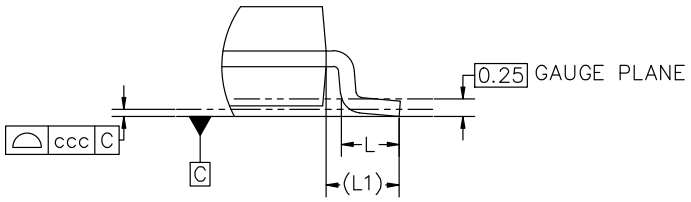

DETAIL "A"
Scale 3:1

MILLIMETERS			
DIM	MIN	NOM	MAX
A	1.35	1.55	1.75
A1	0.10	0.18	0.25
A2	1.25	1.37	1.50
b	0.35	0.42	0.49
c	0.19	0.22	0.25
D	9.90 BSC		
E	6.00 BSC		
E1	3.90 BSC		
e	1.27 BSC		
h	0.25	−−−	0.50
L	0.40	0.83	1.25
L1	1.05 REF		
Θ	0°	−−−	7°
TOLERANCE OF FORM AND POSITION			
aaa	0.10		
bbb	0.20		
ccc	0.10		
ddd	0.25		
eee	0.10		

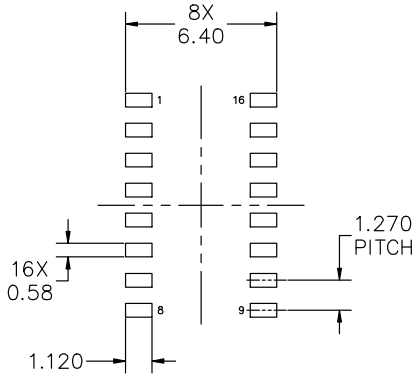

RECOMMENDED MOUNTING FOOTPRINT

*FOR ADDITIONAL INFORMATION ON OUR PB−FREE STRATEGY AND SOLDERING DETAILS, PLEASE DOWNLOAD THE onsemi SOLDERING AND MOUNTING TECHNIQUES REFERENCE MANUAL, SOLDERRM/D

DOCUMENT NUMBER:	**98ASB42566B**	Electronic versions are uncontrolled except when accessed directly from the Document Repository. Printed versions are uncontrolled except when stamped "CONTROLLED COPY" in red.	
DESCRIPTION:	**SOIC−16 9.90X3.90X1.37 1.27P**		**PAGE 1 OF 2**

onsemi and onsemi are trademarks of Semiconductor Components Industries, LLC dba **onsemi** or its subsidiaries in the United States and/or other countries. **onsemi** reserves the right to make changes without further notice to any products herein. **onsemi** makes no warranty, representation or guarantee regarding the suitability of its products for any particular purpose, nor does **onsemi** assume any liability arising out of the application or use of any product or circuit, and specifically disclaims any and all liability, including without limitation special, consequential or incidental damages. **onsemi** does not convey any license under its patent rights nor the rights of others.

© Semiconductor Components Industries, LLC, 2019

Downloaded from Arrow.com.

SOIC−16 9.90x3.90x1.37 1.27P
CASE 751B
ISSUE M

DATE 18 OCT 2024

GENERIC MARKING DIAGRAM*

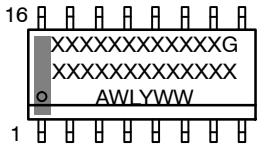

XXXXX = Specific Device Code
A = Assembly Location
WL = Wafer Lot
Y = Year
WW = Work Week
G = Pb−Free Package

*This information is generic. Please refer to device data sheet for actual part marking. Pb−Free indicator, “G” or microdot “▪”, may or may not be present. Some products may not follow the Generic Marking.

STYLE 1:

PIN 1.	COLLECTOR
2.	BASE
3.	EMITTER
4.	NO CONNECTION
5.	EMITTER
6.	BASE
7.	COLLECTOR
8.	COLLECTOR
9.	BASE
10.	EMITTER
11.	NO CONNECTION
12.	EMITTER
13.	BASE
14.	COLLECTOR
15.	EMITTER
16.	COLLECTOR

STYLE 2:

PIN 1.	CATHODE
2.	ANODE
3.	NO CONNECTION
4.	CATHODE
5.	CATHODE
6.	NO CONNECTION
7.	ANODE
8.	CATHODE
9.	CATHODE
10.	ANODE
11.	NO CONNECTION
12.	CATHODE
13.	CATHODE
14.	NO CONNECTION
15.	ANODE
16.	CATHODE

STYLE 3:

PIN 1.	COLLECTOR, DYE #1
2.	BASE, #1
3.	EMITTER, #1
4.	COLLECTOR, #1
5.	COLLECTOR, #2
6.	BASE, #2
7.	EMITTER, #2
8.	COLLECTOR, #2
9.	COLLECTOR, #3
10.	BASE, #3
11.	EMITTER, #3
12.	COLLECTOR, #3
13.	COLLECTOR, #4
14.	BASE, #4
15.	EMITTER, #4
16.	COLLECTOR, #4

STYLE 4:

PIN 1.	COLLECTOR, DYE #1
2.	COLLECTOR, #1
3.	COLLECTOR, #2
4.	COLLECTOR, #2
5.	COLLECTOR, #3
6.	COLLECTOR, #3
7.	COLLECTOR, #4
8.	COLLECTOR, #4
9.	BASE, #4
10.	EMITTER, #4
11.	BASE, #3
12.	EMITTER, #3
13.	BASE, #2
14.	EMITTER, #2
15.	BASE, #1
16.	EMITTER, #1

STYLE 5:

PIN 1.	DRAIN, DYE #1
2.	DRAIN, #1
3.	DRAIN, #2
4.	DRAIN, #2
5.	DRAIN, #3
6.	DRAIN, #3
7.	DRAIN, #4
8.	DRAIN, #4
9.	GATE, #4
10.	SOURCE, #4
11.	GATE, #3
12.	SOURCE, #3
13.	GATE, #2
14.	SOURCE, #2
15.	GATE, #1
16.	SOURCE, #1

STYLE 6:

PIN 1.	CATHODE
2.	CATHODE
3.	CATHODE
4.	CATHODE
5.	CATHODE
6.	CATHODE
7.	CATHODE
8.	CATHODE
9.	ANODE
10.	ANODE
11.	ANODE
12.	ANODE
13.	ANODE
14.	ANODE
15.	ANODE
16.	ANODE

STYLE 7:

PIN 1.	SOURCE N-CH
2.	COMMON DRAIN (OUTPUT)
3.	COMMON DRAIN (OUTPUT)
4.	GATE P-CH
5.	COMMON DRAIN (OUTPUT)
6.	COMMON DRAIN (OUTPUT)
7.	COMMON DRAIN (OUTPUT)
8.	SOURCE P-CH
9.	SOURCE P-CH
10.	COMMON DRAIN (OUTPUT)
11.	COMMON DRAIN (OUTPUT)
12.	COMMON DRAIN (OUTPUT)
13.	GATE N-CH
14.	COMMON DRAIN (OUTPUT)
15.	COMMON DRAIN (OUTPUT)
16.	SOURCE N-CH

onsemi and ONSEMI are trademarks of Semiconductor Components Industries, LLC dba **onsemi** or its subsidiaries in the United States and/or other countries. **onsemi** reserves the right to make changes without further notice to any products herein. **onsemi** makes no warranty, representation or guarantee regarding the suitability of its products for any particular purpose, nor does **onsemi** assume any liability arising out of the application or use of any product or circuit, and specifically disclaims any and all liability, including without limitation special, consequential or incidental damages. **onsemi** does not convey any license under its patent rights nor the rights of others.

© Semiconductor Components Industries, LLC, 2019

Downloaded from Arrow.com.

onsemi, ONSEMI , and other names, marks, and brands are registered and/or common law trademarks of Semiconductor Components Industries, LLC dba "**onsemi**" or its affiliates and/or subsidiaries in the United States and/or other countries. **onsemi** owns the rights to a number of patents, trademarks, copyrights, trade secrets, and other intellectual property. A listing of **onsemi**'s product/patent coverage may be accessed at www.onsemi.com/site/pdf/Patent−Marking.pdf. **onsemi** reserves the right to make changes at any time to any products or information herein, without notice. The information herein is provided "as−is" and **onsemi** makes no warranty, representation or guarantee regarding the accuracy of the information, product features, availability, functionality, or suitability of its products for any particular purpose, nor does **onsemi** assume any liability arising out of the application or use of any product or circuit, and specifically disclaims any and all liability, including without limitation special, consequential or incidental damages. Buyer is responsible for its products and applications using **onsemi** products, including compliance with all laws, regulations and safety requirements or standards, regardless of any support or applications information provided by **onsemi**. "Typical" parameters which may be provided in **onsemi** data sheets and/or specifications can and do vary in different applications and actual performance may vary over time. All operating parameters, including "Typicals" must be validated for each customer application by customer's technical experts. **onsemi** does not convey any license under any of its intellectual property rights nor the rights of others. **onsemi** products are not designed, intended, or authorized for use as a critical component in life support systems or any FDA Class 3 medical devices or medical devices with a same or similar classification in a foreign jurisdiction or any devices intended for implantation in the human body. Should Buyer purchase or use **onsemi** products for any such unintended or unauthorized application, Buyer shall indemnify and hold **onsemi** and its officers, employees, subsidiaries, affiliates, and distributors harmless against all claims, costs, damages, and expenses, and reasonable attorney fees arising out of, directly or indirectly, any claim of personal injury or death associated with such unintended or unauthorized use, even if such claim alleges that **onsemi** was negligent regarding the design or manufacture of the part. **onsemi** is an Equal Opportunity/Affirmative Action Employer. This literature is subject to all applicable copyright laws and is not for resale in any manner.

ADDITIONAL INFORMATION

TECHNICAL PUBLICATIONS:
Technical Library: www.onsemi.com/design/resources/technical−documentation
onsemi Website: www.onsemi.com

ONLINE SUPPORT: www.onsemi.com/support
For additional information, please contact your local Sales Representative at www.onsemi.com/support/sales

◊

Downloaded from Arrow.com.