SERIES: PDQE15-U | DESCRIPTION: DC-DC CONVERTER

FEATURES

- up to 15 W isolated output
- 1,500 Vdc isolation
- ultra-wide 4:1 input range (9~36 Vdc, 18~75 Vdc)
- same side input/output connections
- single/dual regulated outputs
- input under-voltage, output short-circuit, over-current, & over-voltage protections
- wide operating temperature range (-40~105°C)
- efficiency up to 91%
- EN/BS EN 62368-1
- meets UL 62368

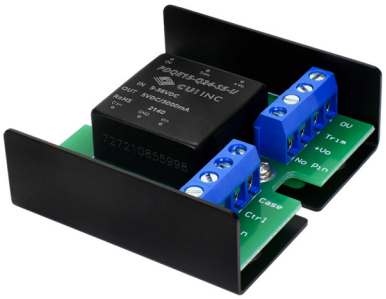

MODEL	input voltage typ (Vdc)	input voltage range (Vdc)	output voltage (Vdc)	output current min (mA)	output current max (mA)	output power max (W)	ripple & noise[1] max (mVp-p)	efficiency[2] typ (%)
PDQE15-Q24-D5-U[3]	24	9~36	±5	0	±1500	15	200	87
PDQE15-Q24-D12-U[3]	24	9~36	±12	0	±625	15	200	90
PDQE15-Q24-D15-U[3]	24	9~36	±15	0	±500	15	200	90
PDQE15-Q24-D24-U[3]	24	9~36	±24	0	±312	15	200	89
PDQE15-Q24-S3-U[3]	24	9~36	3.3	0	4000	13.2	100	88
PDQE15-Q24-S5-U[3]	24	9~36	5	0	3000	15	100	90
PDQE15-Q24-S12-U[3]	24	9~36	12	0	1250	15	100	90
PDQE15-Q24-S15-U[3]	24	9~36	15	0	1000	15	100	91
PDQE15-Q24-S24-U[3]	24	9~36	24	0	625	15	100	91
PDQE15-Q48-D5-U	48	18~75	±5	0	±1500	15	200	86
PDQE15-Q48-D12-U	48	18~75	±12	0	±625	15	200	89
PDQE15-Q48-D15-U	48	18~75	±15	0	±500	15	200	89
PDQE15-Q48-D24-U	48	18~75	±24	0	±312	15	200	90
PDQE15-Q48-S3-U	48	18~75	3.3	0	4000	13.2	100	88
PDQE15-Q48-S5-U	48	18~75	5	0	3000	15	100	90
PDQE15-Q48-S12-U	48	18~75	12	0	1250	15	100	91
PDQE15-Q48-S15-U	48	18~75	15	0	1000	15	100	91
PDQE15-Q48-S24-U	48	18~75	24	0	625	15	100	91

Notes:
1. From 5~100% load, 20 MHz bandwidth oscilloscope, using the "parallel cable" method for testing.
   From 0~5% load, ripple and noise is <±5% Vo.
2. Measured at nominal input voltage and rated load.
3. Model is not CE certified.
4. All specifications are measured at Ta=25°C, humidity < 75%, nominal input voltage, and rated output load unless otherwise specified.

Please read our datasheet & drawing disclaimer here.
Downloaded from Arrow.com.

PART NUMBER KEY

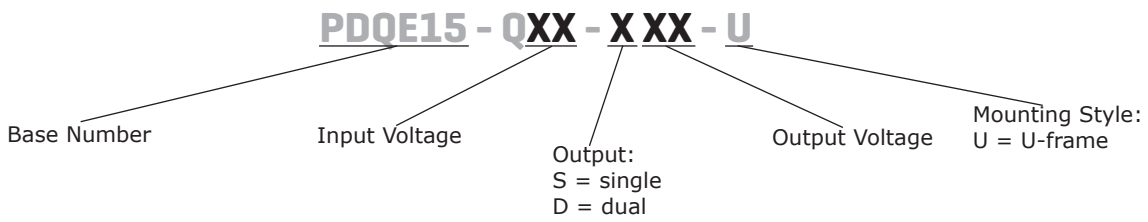

INPUT

parameter	conditions/description			min	typ	max	units
operating input voltage	24 Vdc input models			9	24	36	Vdc
	48 Vdc input models			18	48	75	Vdc
start-up voltage	24 Vdc input models					9	Vdc
	48 Vdc input models					18	Vdc
surge voltage	for maximum of 1 second						
	24 Vdc input models			-0.7		50	Vdc
	48 Vdc input models			-0.7		100	Vdc
under voltage shutdown	24 Vdc input models			5.5	6.5		Vdc
	48 Vdc input models			12	15.5		Vdc
current (full load/no load)	dual output models	24 Vdc input models			719/10	735/20	mA
		48 Vdc input models			364/5	372/11	mA
	single output models	24 Vdc input models	3.3 Vdc output		625/30	640/50	mA
			5 Vdc output		694/30	710/50	mA
			12 Vdc output		694/6	710/15	mA
			15 Vdc output		687/6	703/15	mA
			24 Vdc output		687/10	703/20	mA
		48 Vdc input models	3.3 Vdc output		313/15	320/30	mA
			5 Vdc output		348/15	356/30	mA
			all other output models		344/3	352/11	mA
remote on/off (CTRL)	module ON (3.5~12 Vdc or CTRL pin open circuit or pulled high)						
	module OFF (0~1.2 Vdc CTRL pin pulled low to GND)						
	input current when switched off				2	7	mA
start-up time	nominal input, constant resistance load				10		ms
filter	Pi filter						

OUTPUT

parameter	conditions/description	min	typ	max	units
maximum capacitive load[4]	3.3, 5 Vdc output models			4,700	µF
	±5 Vdc output models			1,500	µF
	12 Vdc output models			1,000	µF
	±12 Vdc output models			470	µF
	15 Vdc output models			820	µF
	±15 Vdc output models			330	µF
	24 Vdc output models			270	µF
	±24 Vdc output models			200	µF
voltage accuracy[5]	0% to full load		±1	±3	%
line regulation	from low line to high line, full load				
	positive outputs		±0.2	±0.5	%
	negative outputs		±0.5	±1	%
load regulation[6]	from 5% to full load		±0.5	±1	%

Downloaded from Arrow.com.

OUTPUT (CONTINUED)

parameter	conditions/description	min	typ	max	units
cross regulation	dual output models: positive output 50% load secondary output from 10~100% load			±5	%
switching frequency[7]	PWM mode 3.3, 5 Vdc output models all other output models		300 270		kHz kHz
transient recovery time	25% load step change, nominal input voltage		300	500	µs
transient response deviation	25% load step change, nominal input voltage 3.3, 5 Vdc output models ±5 Vdc output model all other output models		 ±3 ±3 ±3	 ±7 ±8 ±5	 % % %
temperature coefficient	at full load			±0.03	%/°C

Note:
4. Specified maximum capacitive load for positive and negative outputs is identical.
5. Output voltage accuracy of ±5 Vdc/±9 Vdc output converter for 0%~5% load is ±5% max.
6. Load regulation for 0%~100% load is ±5%.
7. Switching frequency is measured at full load. Module reduces switching frequency at light load (blow 50%), to increase efficiency.

PROTECTIONS

parameter	conditions/description	min	typ	max	units
over voltage protection		110		160	%
over current protection	single output models dual output models	110 110	150 200	190 270	% %
short circuit protection	continuous, auto recovery				

SAFETY AND COMPLIANCE

parameter	conditions/description	min	typ	max	units
isolation voltage	input to output for 1 minute at 1 mA input to output-case for 1 minute at 1 mA	1,500 1,000			Vdc Vdc
isolation resistance	input to output at 500 Vdc	1,000			MΩ
isolation capacitance	input to output, 100 kHz / 0.1 V		2,000		pF
safety approvals	certified to 62368: EN, BS EN				
conducted emissions	CISPR32/EN55032 CLASS A (without extra components), CLASS B (see Fig. 3-2) EN50121-3-2 150kHz-500kHz 99dBuV (see Fig. 3-2) EN55016-2-1 500kHz-30MHz 93dBuV (see Fig. 3-2)				
radiated emissions	CISPR32/EN55032 CLASS A (without extra components), CLASS B (see Fig. 3-2) EN50121-3-2 30MHz-230MHz 40dBuV/m at 10m (see Fig. 3-2) EN55016-2-1 230MHz-1GHz 47dBuV/m at 10m (see Fig.3-2)				
ESD	IEC/EN61000-4-2 Contact ±4kV, perf. Criteria B EN50121-3-2 Contact ±6KV/Air ±8KV, perf. Criteria A				
radiated immunity	IEC/EN61000-4-3 10V/m, perf. Criteria A EN50121-3-2 20V/m, perf Criteria A				
EFT/burst	IEC/EN61000-4-4 ±2kV (see Fig. 3-1), perf. Criteria B EN50121-3-2 ±2kV 5/50ns 5kHz (see Fig. 3-1), perf. Criteria A				
surge	IEC/EN61000-4-5 line to line ±2kV (see Fig. 3-1), perf. Criteria B EN50121-3-2 line to line ±1KV (42Ω , 0.5µF) (see Fig. 3-1), perf. Criteria A				
conducted immunity	IEC/EN61000-4-6 3 Vrms, perf. Criteria A EN50121-3-2 0.15MHz-80MHz 10V r.m.s, perf. Criteria A				
MTBF	as per MIL-HDBK-217F, 25°C	1,000,000			hours
RoHS	yes				

Downloaded from Arrow.com.

ENVIRONMENTAL

parameter	conditions/description	min	typ	max	units
operating temperature	see derating curve 3.3, 5 Vdc output models all other output models	 -40 -40		 105 95	 °C °C
storage temperature		-55		125	°C
storage humidity	non-condensing	5		95	%

DERATING CURVES

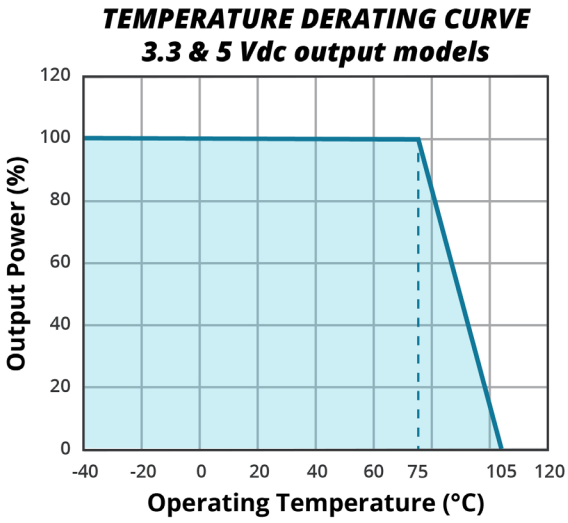

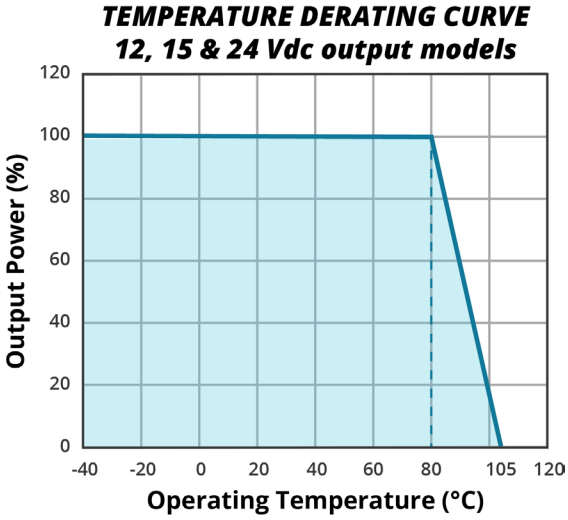

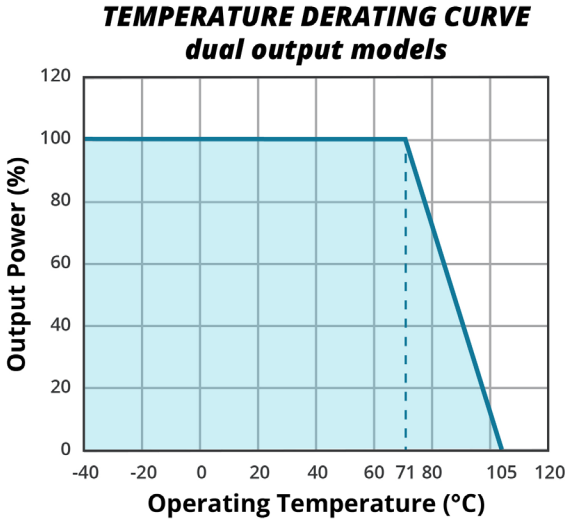

SOLDERABILITY

parameter	conditions/description	min	typ	max	units
pin soldering resistance temperature	1.5 mm from case for 10 seconds			300	°C

Downloaded from Arrow.com.

MECHANICAL

parameter	conditions/description	min	typ	max	units
dimensions	55.00 x 52.30 x 19.00 [2.165 x 2.059 x 0.748 inch]				mm
case material	aluminum alloy				
weight			46		g

MECHANICAL DRAWING

units: mm [inch]
wire range: 24-12 AWG
tolerance: ±1.00[±0.039]
tightening torque: Max 0.4 N·m

PIN CONNECTIONS		
PIN	Function	
	Single	Dual
1	GND	GND
2	Vin	Vin
3	Ctrl	Ctrl
4	Case	Case
5	NC	NC
6	+Vo	+Vo
7	Trim	0V
8	0V	-Vo

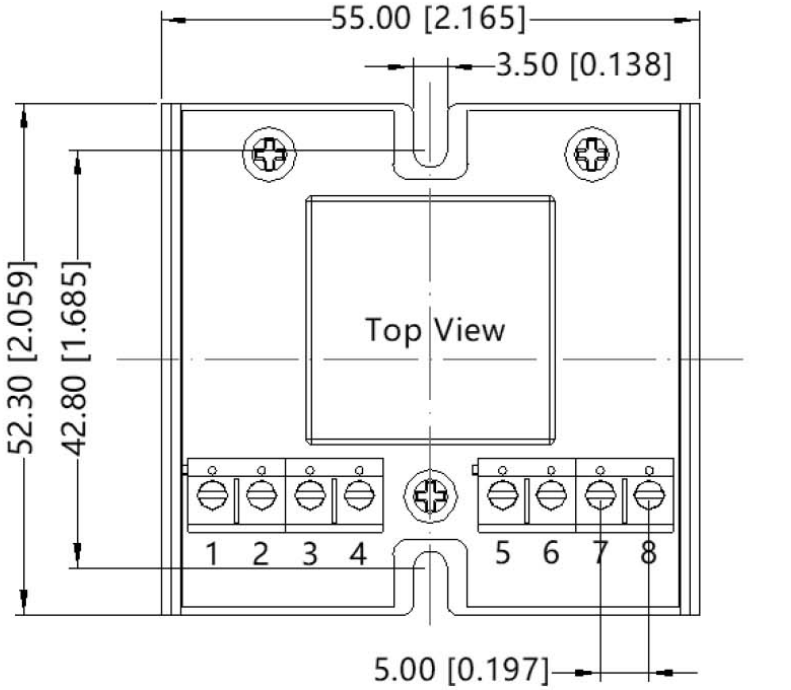

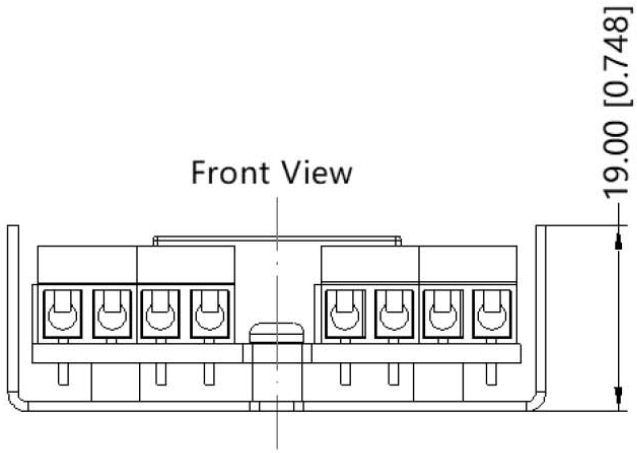

Downloaded from Arrow.com.

EFFICIENCY CURVES

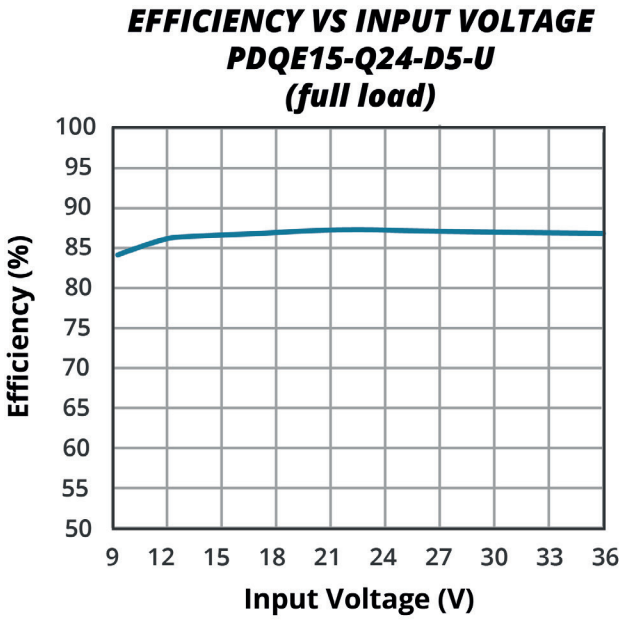

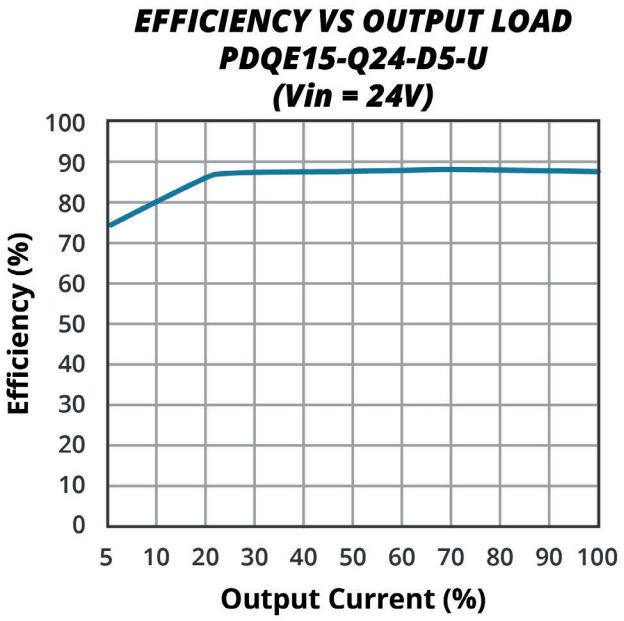

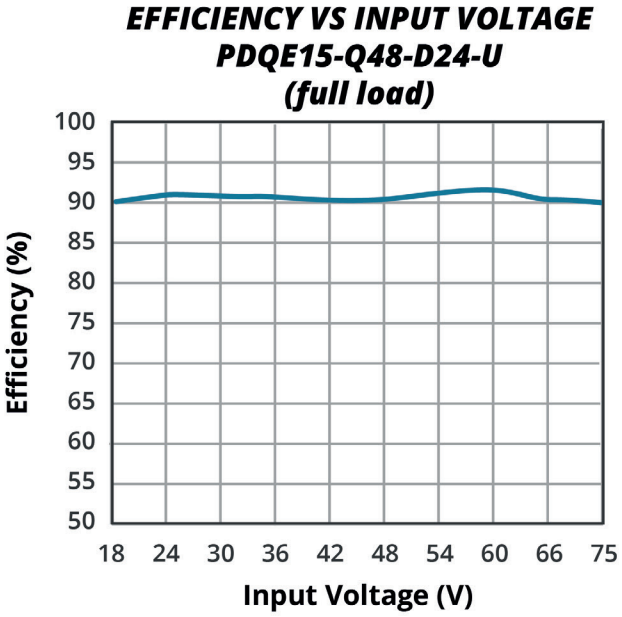

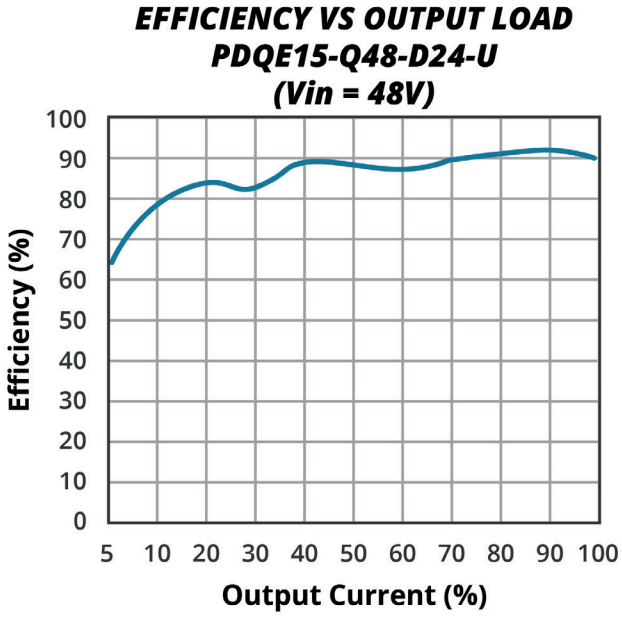

Downloaded from Arrow.com.

EFFICIENCY CURVES (CONTINUED)

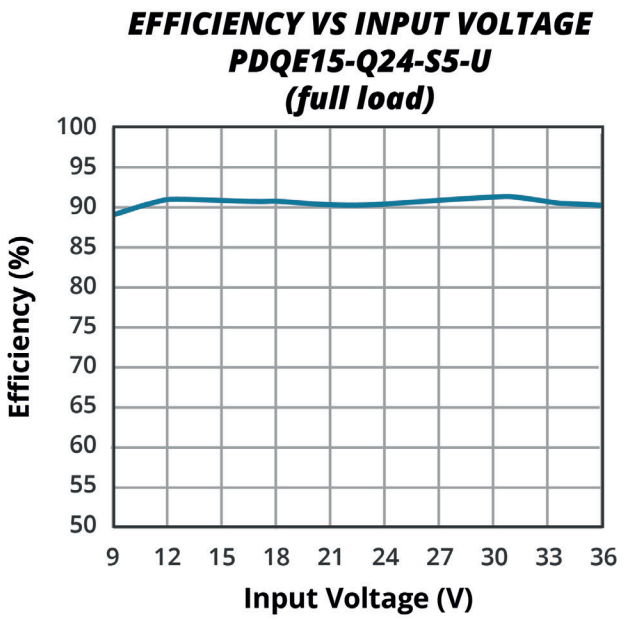

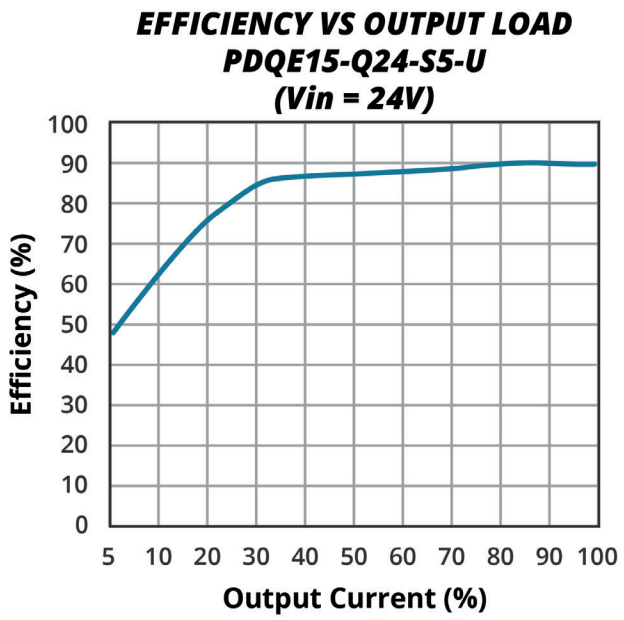

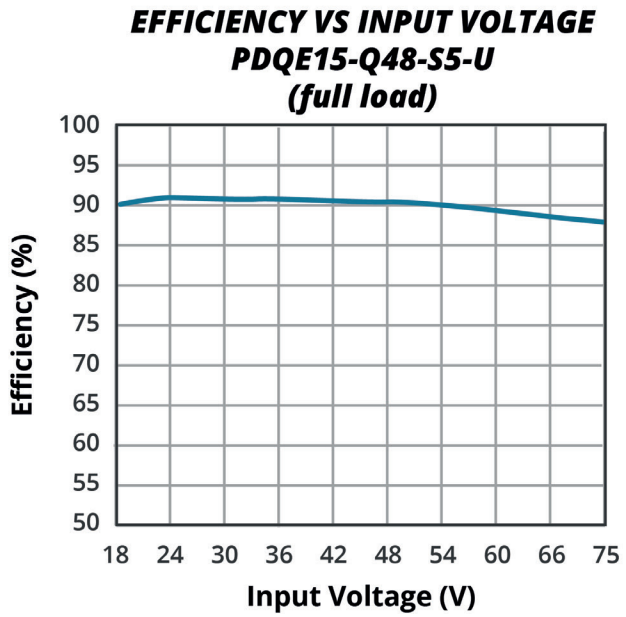

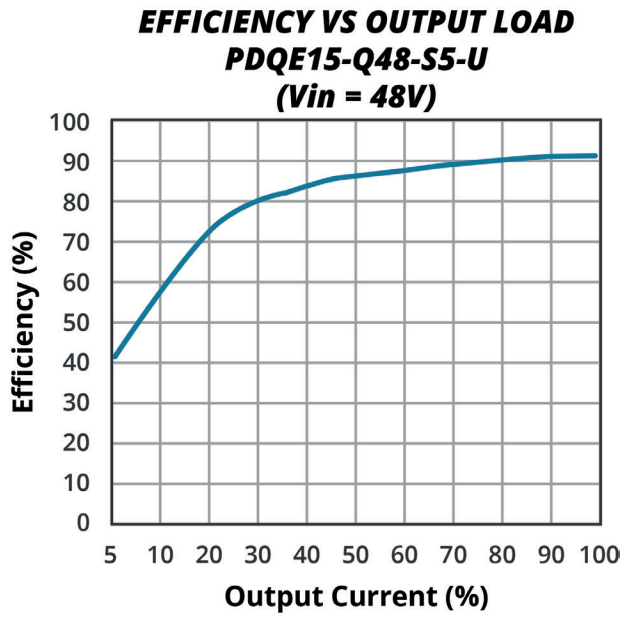

Downloaded from Arrow.com.

APPLICATION CIRCUIT

This series has been tested according to the following recommended circuits (Figures 1 & 2) before leaving the factory. If you want to further reduce the input and output ripple, you can increase the input and output capacitors or select capacitors of low equivalent series resistance (ESR) provided that the capacitance is less than the maximum capacitive load of the model.

Figure 1
Single Output Models

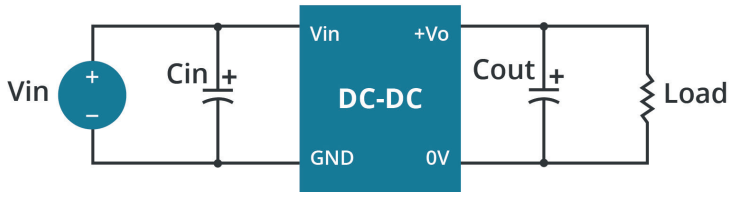

Figure 2
Dual Output Models

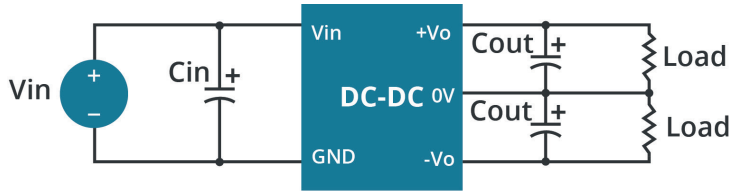

Table 1

Vin (Vdc)	Cin (μF/V)	Vout (Vdc)	Cout (μF/V)
24	100/50	±5	10/16
		±12/±15	10/25
		±24	10/50
		3.3/5	100/16
		12/15	100/25
		24	47/50
48	10~47/100	±5	10/16
		±12/±15	10/25
		±24	10/50
		3.3/5	100/16
		12/15	100/25
		24	47/50

EMC RECOMMENDED CIRCUIT

Figure 3

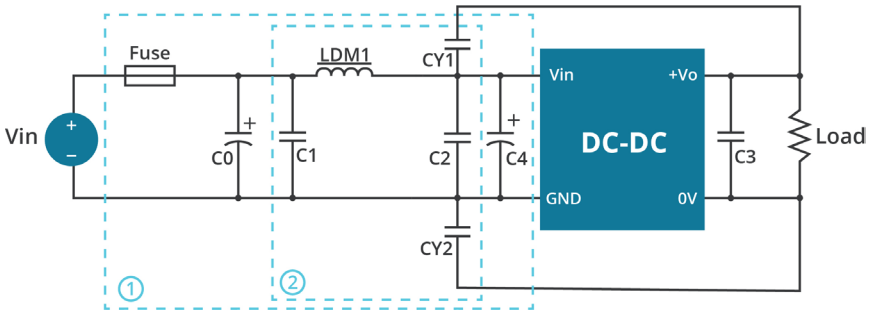

Table 2

Recommended External Circuit Components		
Vin (Vdc)	24	48
FUSE	T/ 2.5A / 250Vac	T/ 1.6A / 250Vac
C0/C4	330μF / 50V	330μF / 100V
C1/C2	4.7μF / 50V	4.7μF / 100V
C3	refer to the Cout in Figure 1 & 2	
LDM1 single / dual	2.2μH/4A / 4.7μH	
CY1, CY2	1nF / 2kV	

Downloaded from Arrow.com.

TRIM FUNCTION

Leave open if not used.

Figure 4

Trim up

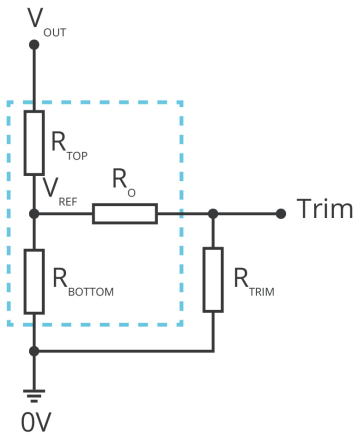

Trim down

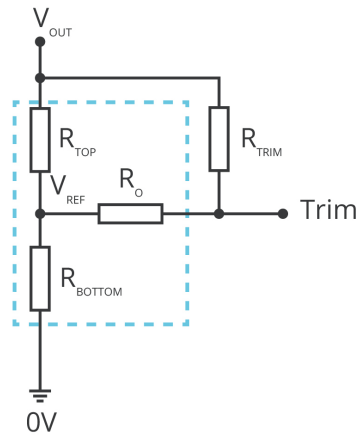

$$R_{TRIM} = \frac{a \cdot R_{BOTTOM}}{R_{BOTTOM} - a} - R_O \qquad a = \frac{V_{REF}}{V_{OUT} - V_{REF}} \cdot R_{TOP}$$

Formula for Trim up

$$R_{TRIM} = \frac{a \cdot R_{TOP}}{R_{TOP} - a} - R_O \qquad a = \frac{V_{OUT} - V_{REF}}{V_{REF}} \cdot R_{BOTTOM}$$

Formula for Trim down

Table 3

V_{OUT}	R_{TOP}	R_{BOTTOM}	R_O	V_{REF}
(Vdc)	(kΩ)	(kΩ)	(kΩ)	(V)
3.3	4.801	2.87	15	1.25
5	2.894	2.87	10	2.5
12	11.000	2.87	17.4	2.5
15	14.494	2.87	17.4	2.5
24	24.872	2.87	20	2.5

Note: Value for R_{TOP}, R_{BOTTOM}, R_O, and V_{REF} refer to Table 3 (fixed internal values).
R_{TRIM}: Trim resistance
a: User-defined parameter, no actual meanings
V_{OUT}: Nominal output voltage

Downloaded from Arrow.com.

REVISION HISTORY

rev.	description	date
1.0	initial release	12/06/2021
1.01	Vref updated for 3.3 Vdc output model	02/07/2022
1.02	CE certification updated for 24V models	11/20/2022

The revision history provided is for informational purposes only and is believed to be accurate.

CUI INC
a bel group

Headquarters
20050 SW 112th Ave.
Tualatin, OR 97062
800.275.4899

Fax 503.612.2383
cui.com
techsupport@cui.com

CUI offers a two (2) year limited warranty. Complete warranty information is listed on our website.

CUI reserves the right to make changes to the product at any time without notice. Information provided by CUI is believed to be accurate and reliable. However, no responsibility is assumed by CUI for its use, nor for any infringements of patents or other rights of third parties which may result from its use.

CUI products are not authorized or warranted for use as critical components in equipment that requires an extremely high level of reliability. A critical component is any component of a life support device or system whose failure to perform can be reasonably expected to cause the failure of the life support device or system, or to affect its safety or effectiveness.

Downloaded from Arrow.com.