SERIES: VGS-250B | **DESCRIPTION:** AC-DC POWER SUPPLY

DISCONTINUED

FEATURES

- built-in cooling with temperature-controlled fan
- +70°C operation
- output trim
- current/voltage/temperature protections
- screw terminal interface
- switch-selectable AC input range
- low standby power consumption
- 30 mm height

MODEL	output voltage (Vdc)	output current max (A)	output power max (W)	ripple and noise[1] max (mVp-p)	efficiency[2] typ (%)
VGS-250B-12	12	20.8	249.6	150	86.5
VGS-250B-24	24	10.5	252	150	89
VGS-250B-48	48	5.2	249.6	200	89.5

Notes:
1. 20 MHz bandwidth oscilloscope, 12" of twisted load cables paralleled with 0.1 µF ceramic and 47 µF electrolytic capacitors placed across the terminals at the load.
2. At 230 Vac, 50 Hz, full load.
3. All specifications are measured at Ta=25°C, nominal input voltage, and rated output load unless otherwise specified.

PART NUMBER KEY

VGS-250B - XX

Base Number — Output Voltage

Please read our datasheet & drawing disclaimer here.

Downloaded from Arrow.com.

DISCONTINUED

INPUT

parameter	conditions/description	min	typ	max	units
voltage	via input selector switch[1]	90 180	115 230	132 264	Vac Vac
frequency		47		63	Hz
current	at 115 Vac, full load at 230 Vac, full load			5 3	A A
inrush current	at 230 Vac, cold start, full load			60	A
leakage current	at 240 Vac			2	mA
no load power consumption	at 230 Vac			0.75	W

Notes: 1. Input selector must be set to match input voltage or damage could occur.

OUTPUT

parameter	conditions/description	min	typ	max	units
line regulation				±0.5	%
load regulation	12 Vdc output model all other models			±1 ±0.5	% %
adjustability	built in trim pot		±10		%
start-up time	at 115/230 Vac, full load			1.5	s
rise time	at 115/230 Vac, full load			30	ms
hold-up time	at 115 Vac, full load at 230 Vac, full load	12 16			ms ms
switching frequency			65		kHz

PROTECTIONS

parameter	conditions/description	min	typ	max	units
over voltage protection	output shutdown, auto recovery	115		150	%
over current protection	output shutdown, auto recovery	105		150	%
short circuit protection	output shutdown, auto recovery				
over temperture protection	output shutdown, auto recovery				

SAFETY & COMPLIANCE

parameter	conditions/description	min	typ	max	units
isolation voltage	input to output for 1 minute, 10 mA input to ground for 1 minute, 10 mA output to ground for 1 minute, 10 mA		1,500 1,500 500		Vac Vac Vac
isolation resistance	input to output at 500 Vdc input to ground at 500 Vdc output to ground 500 Vdc	100 100 100			MΩ MΩ MΩ
safety approvals	certified to 62368: EN certified to 60950: IEC/UL				
safety class	class I				
conducted emissions	EN 55032:2015, Class A				
radiated emissions	EN 55032:2015, Class A				
voltage fluctuation and flicker	EN 61000-3-3:2013, Class A				
ESD immunity	IEC 61000-4-2, air: ±8 kV; contact: ±4 kV, Class A				
radiated field immunity	IEC 61000-4-3, 3 V/m, Class A				
electrical fast transient immunity	IEC 61000-4-4, Ac power port: 1 kV; signal & telecommunication ports: 0.5 kV, Class B				

Notes: 2. The power supply is considered a component which will be installed into final equipment. The final equipment still must be tested to meet the necessary EMC directives.

Downloaded from Arrow.com.

SAFETY & COMPLIANCE (CONTINUED)

parameter	conditions/description	min	typ	max	units
surge immunity	IEC 61000-4-5, input L to input N: 1 kV; input L to FG: 2 kV; input N to FG: 2 kV, Class C				
conducted immunity	IEC 61000-4-6, frequency range: 0.15~80 MHz; field strength: 3 Vms, Class A				
magnetic field immunity	IEC 61000-4-8, 1 A/m, Class A				
voltage dips, interruptions	IEC 61000-4-11: voltage dips >95% reduction, 0.5 period, Class A voltage dips 30% reduction, 25 period, Class B voltage dips >95% reduction, 250 period, Class C				
MTBF	as per MIL-HDBK-217F, 25°C		200,000		hours
RoHS	yes				

Notes: 1. The power supply is considered a component which will be installed into final equipment. The final equipment still must be tested to meet the necessary EMC directives.

ENVIRONMENTAL

parameter	conditions/description	min	typ	max	units
operating temperature	see derating curves	-20		70	°C
storage temperature		-40		85	°C
operating humidity	non-condensing	20		90	%
storage humidity	non-condensing	10		95	%

DERATING CURVES

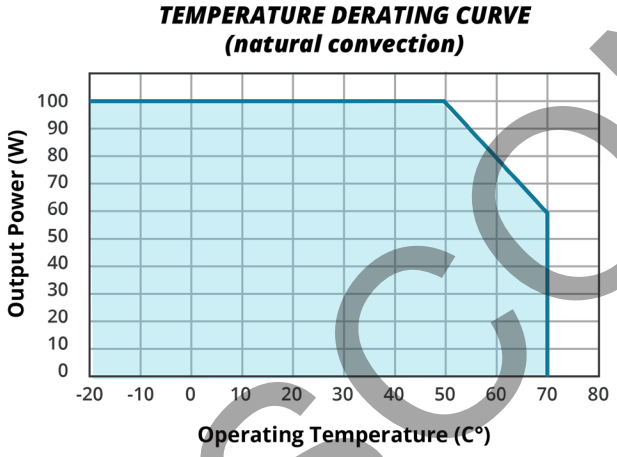

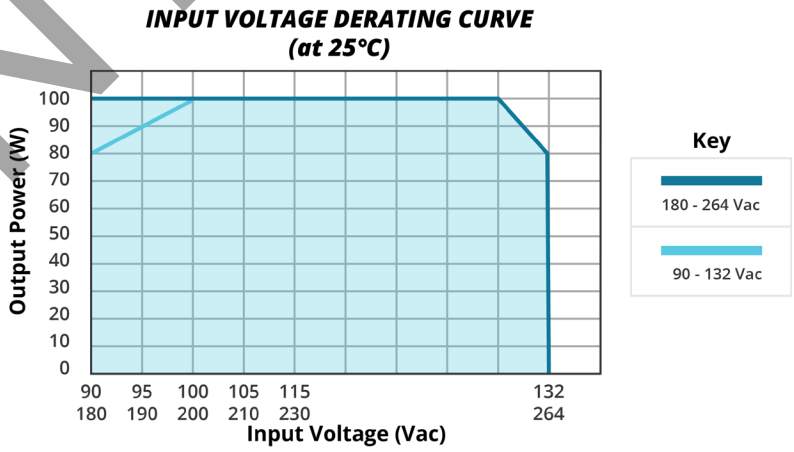

DISCONTINUED

Downloaded from Arrow.com.

MECHANICAL

parameter	conditions/description	min	typ	max	units
dimensions	215 x 115 x 30				mm
weight			1000		g
cooling	cooling fan				
input/output connector	screw terminals accept 22~12 AWG wire, 1.2 N-m torque				

MECHANICAL DRAWING

units: mm
tolerance: ±0.3 mm

Input/Output Connector	
PIN	Function
1	+V
2	+V
3	+V
4	-V
5	-V
6	-V
7	FG
8	AC(N)
9	AC(L)

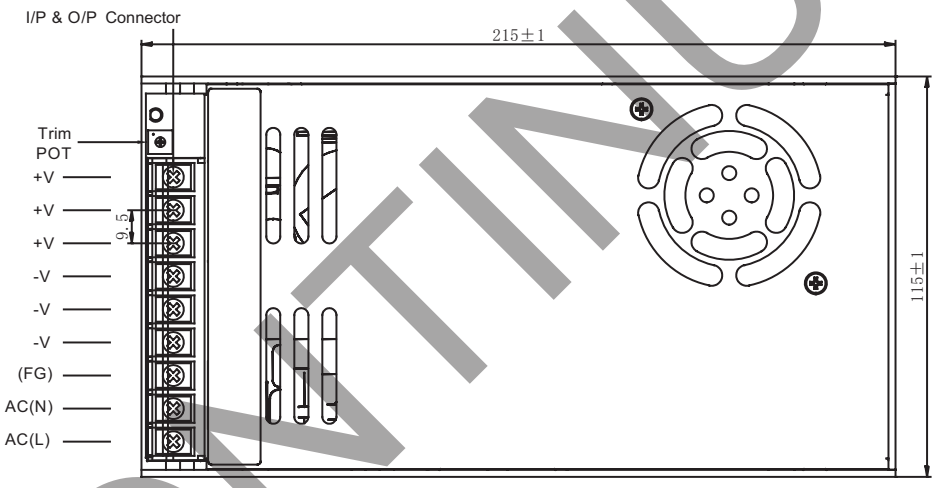

MOUNTING SCREWS		
Screw Size	Max Depth	Torque
M3X0.5	4 mm	<0.75 N-m
M4X0.7	4 mm	<0.8 N-m
MOUNTING ORIENTATION		

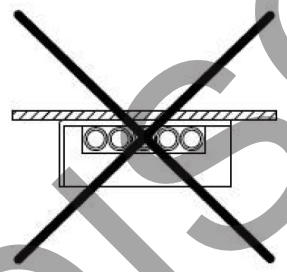

Note: 1. Parts should not be mounted in an upside down orientation.

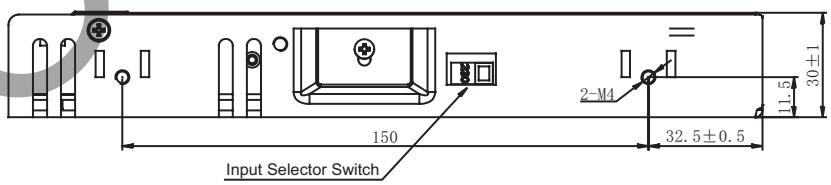

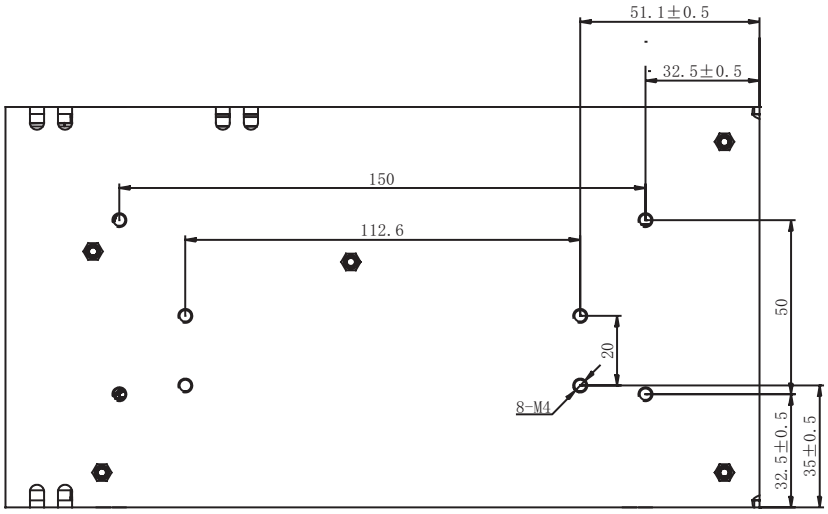

DISCONTINUED

Downloaded from Arrow.com.

REVISION HISTORY

rev.	description	date
1.0	initial release	06/20/2018
1.01	updated terminal function detail	06/14/2019
1.02	company logo updated	12/22/2020
1.03	safeties updated	01/25/2021
1.04	derating curves updated	06/10/2021
1.05	safety marks updated	05/02/2023

The revision history provided is for informational purposes only and is believed to be accurate.

DISCONTINUED

CUI INC
a bel group

Headquarters
20050 SW 112th Ave.
Tualatin, OR 97062
800.275.4899

Fax 503.612.2383
cui.com
techsupport@cui.com

CUI offers a two (2) year limited warranty. Complete warranty information is listed on our website.

CUI reserves the right to make changes to the product at any time without notice. Information provided by CUI is believed to be accurate and reliable. However, no responsibility is assumed by CUI for its use, nor for any infringements of patents or other rights of third parties which may result from its use.

CUI products are not authorized or warranted for use as critical components in equipment that requires an extremely high level of reliability. A critical component is any component of a life support device or system whose failure to perform can be reasonably expected to cause the failure of the life support device or system, or to affect its safety or effectiveness.

Downloaded from Arrow.com.