AFB 25 x 25 x 10 MM SERIES

* Bearing Type
  Ball Bearings
* Material
  Impeller & Frame : Plastic (UL 94V-0)
* Lead Wires :
  UL 1061 AWG #26 OR Equivalent
  Red Wire Positive (+)
  Black Wire Negative (-)
* Weight : 10.5g (0.37 oz)
* Rib Type Only & One Side Flange

■ DIMENSIONS DRAWING

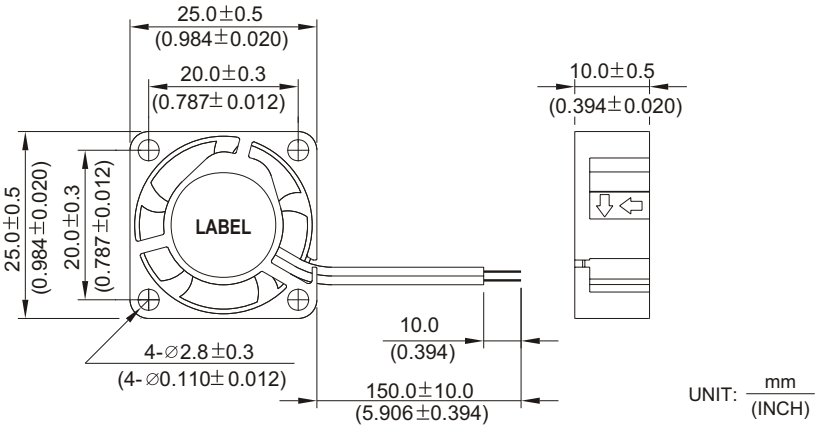

■ P & Q CURVE (AT RATED VOLTAGE)

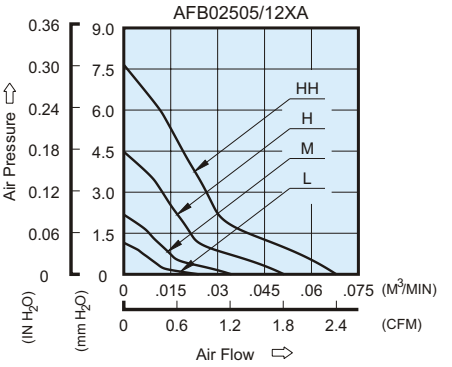

■ MOUNTING PANEL CUTOUT

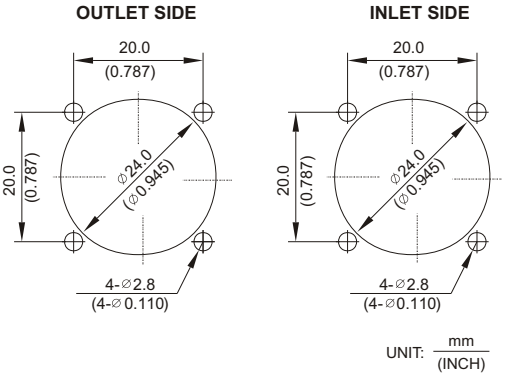

MODEL		Rated Voltage	Operating Voltage Range	Rated Current	Rated Input Power	Speed	Maximum Air Flow		Maximum Air Pressure		Noise
PART NO.	FUNCTION	VDC	VDC	Amp	Watt	R.P.M.	m^3 /min	CFM	mmH_2O	IN H_2O	dB-A
AFB02505LA	-R00 / -F00	5	4.0 to 6.0	0.04	0.20	5000	0.024	0.85	1.15	0.045	18.0
AFB02505MA	-R00 / -F00	5	4.0 to 6.0	0.06	0.30	7000	0.034	1.20	2.18	0.085	20.0
AFB02512MA	-R00 / -F00	12	9.5 to 13.2	0.04	0.48						
AFB02505HA	-R00 / -F00	5	4.0 to 6.0	0.12	0.60	10000	0.052	1.84	4.48	0.176	23.5
AFB02512HA	-R00 / -F00	12	7.0 to 13.2	0.06	0.72						
AFB02505HHA	-R00 / -F00	5	4.0 to 6.0	0.16	0.80	13000	0.068	2.40	7.65	0.300	28.0
AFB02512HHA	-R00 / -F00	12	7.0 to 13.2	0.08	0.96						

* Function type is optional.
* The max. air flow and the speed are measured in free air ; max. air pressure is measured at zero air flow.
* Noise is measured in anechoic chamber in free air, one meter from intake side.
* All readings are typical values at rated voltage.
* Specifications are subject to change without notice.

Downloaded from Arrow.com.

AFB 30 x 30 x 10 MM SERIES

* Bearing Type
  Ball Bearings
* Material
  Impeller & Frame : Plastic (UL 94V-0)
* Lead Wires :
  UL 1061 AWG #26 OR Equivalent
  Red Wire Positive (+)
  Black Wire Negative (-)
* Weight : 10.5g (0.37 oz)
* Rib Type Only

DIMENSIONS DRAWING

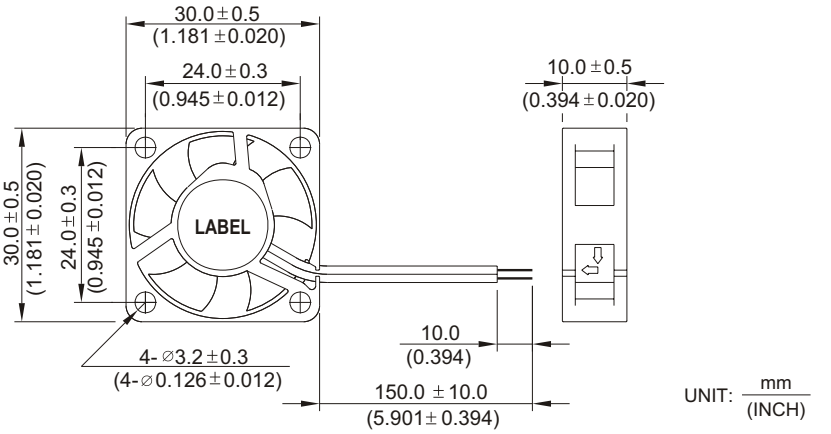

P & Q CURVE (AT RATED VOLTAGE)

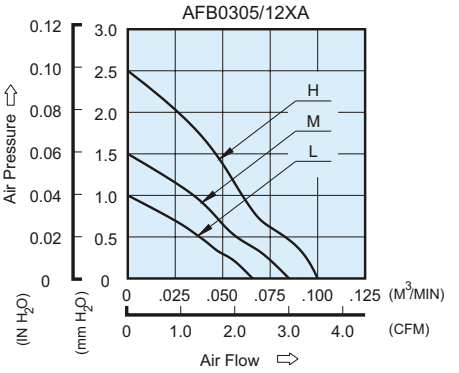

MOUNTING PANEL CUTOUT

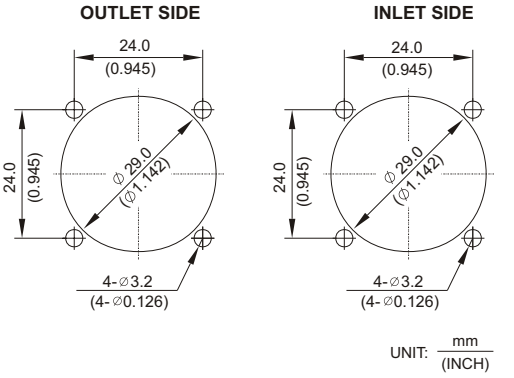

MODEL		Rated Voltage	Operating Voltage Range	Rated Current	Rated Input Power	Speed	Maximum Air Flow		Maximum Air Pressure		Noise
PART NO.	FUNCTION	VDC	VDC	Amp	Watt	R.P.M.	m^3 /min	CFM	mmH_2O	IN H_2O	dB-A
AFB0305LA	-R00 / -F00	5	4.0 to 6.0	0.07	0.35	6000	0.067	2.37	1.00	0.040	17.5
AFB0312LA	-R00 / -F00	12	9.5 to 13.8	0.05	0.60						
AFB0305MA	-R00 / -F00	5	4.0 to 6.0	0.11	0.55	7500	0.085	3.00	1.50	0.060	20.0
AFB0312MA	-R00 / -F00	12	9.5 to 13.8	0.07	0.84						
AFB0305HA	-R00 / -F00	5	4.0 to 6.0	0.16	0.80	9000	0.100	3.53	2.50	0.100	25.0
AFB0312HA	-R00 / -F00	12	9.5 to 13.8	0.09	1.08						

* Function type is optional.
* The max. air flow and the speed are measured in free air ; max. air pressure is measured at zero air flow.
* Noise is measured in anechoic chamber in free air, one meter from intake side.
* All readings are typical values at rated voltage.
* Specifications are subject to change without notice.

Downloaded from Arrow.com.

AFB 35 x 35 x 10 MM SERIES

* Bearing Type
  Ball Bearings
* Material
  Impeller & Frame : Plastic (UL 94V-0)
* Lead Wires :
  UL 1061 AWG #26 OR Equivalent
  Red Wire Positive (+)
  Black Wire Negative (-)
* Weight : 10g (0.35 oz)
* Rib Type Only

■ DIMENSIONS DRAWING

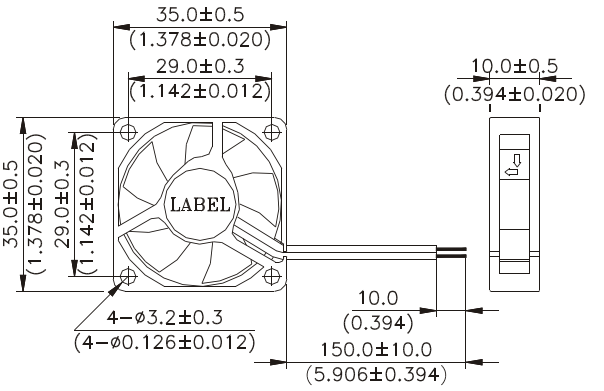

UNIT: mm (INCH)

■ P & Q CURVE (AT RATED VOLTAGE)

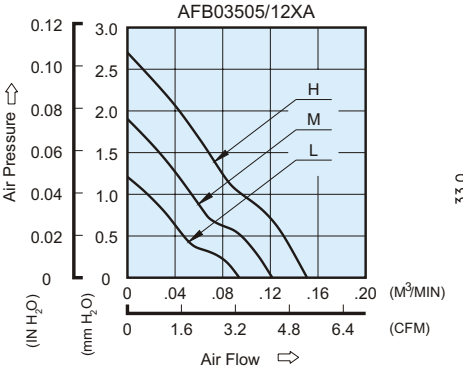

■ MOUNTING PANEL CUTOUT

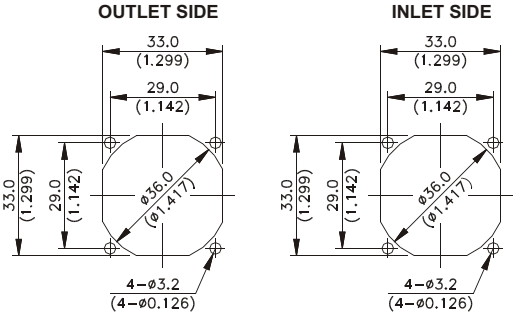

UNIT: mm (INCH)

MODEL		Rated Voltage	Operating Voltage Range	Rated Current	Rated Input Power	Speed	Maximum Air Flow		Maximum Air Pressure		Noise
PART NO.	FUNCTION	VDC	VDC	Amp	Watt	R.P.M.	m^3 /min	CFM	mmH_2O	IN H_2O	dB-A
AFB03505LA	-R00 / -F00	5	4.0 to 6.0	0.06	0.30	4500	0.095	3.36	1.21	0.048	15.0
AFB03505MA	-R00 / -F00	5	4.0 to 6.0	0.10	0.50	5800	0.127	4.50	1.90	0.075	18.0
AFB03512MA	-R00 / -F00	12	9.5 to 13.8	0.05	0.60						
AFB03505HA	-R00 / -F00	5	4.0 to 6.0	0.14	0.70	7000	0.156	5.50	2.70	0.106	22.0
AFB03512HA	-R00 / -F00	12	9.5 to 13.8	0.09	1.08						

* Function type is optional.
* The max. air flow and the speed are measured in free air ; max. air pressure is measured at zero air flow.
* Noise is measured in anechoic chamber in free air, one meter from intake side.
* All readings are typical values at rated voltage.
* Specifications are subject to change without notice.

Downloaded from Arrow.com.

AFB 40 x 40 x 15 MM SERIES

* Bearing Type
  Ball Bearings
* Material
  Impeller & Frame : Plastic(UL 94V-0)
* Lead Wires :
  UL 1007 AWG #24 OR Equivalent
  Red Wire Positive(+)
  Black Wire Negative(-)
* Weight : 25.0g (0.88 OZ)
  Rib Type Only

■ DIMENSIONS DRAWING

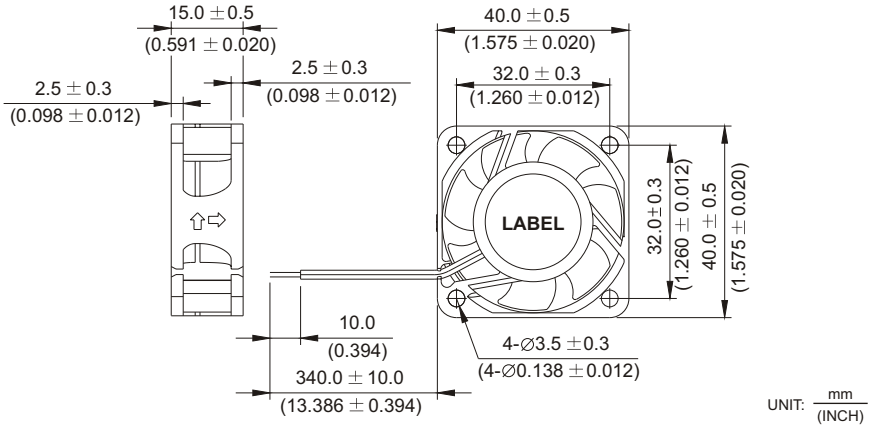

■ P & Q CURVE (AT RATED VOLTAGE)

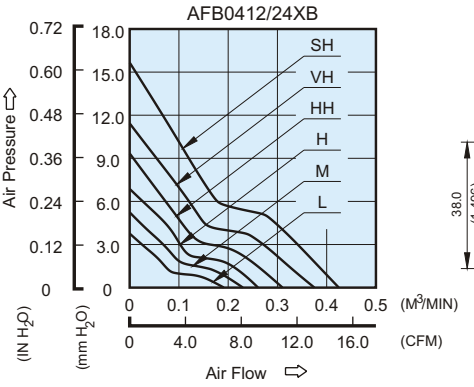

■ MOUNTING PANEL CUTOUT

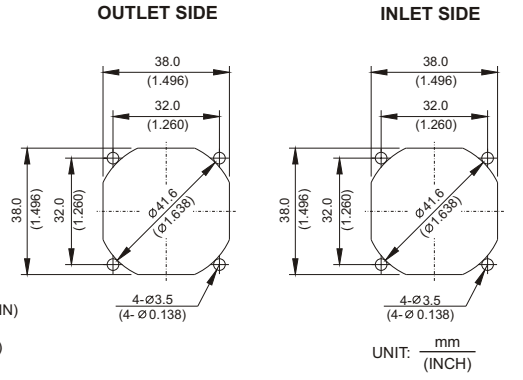

MODEL		Rated Voltage	Operating Voltage Range	Rated Current	Rated Input Power	Speed	Maximum Air Flow		Maximum Air Pressure		Noise
PART NO.	FUNCTION	VDC	VDC	Amp	Watt	R.P.M.	m^3 /min	CFM	mmH_2O	$IN\ H_2O$	dB-A
AFB0412LB	-R00 / -F00	12	7.0 to 13.8	0.06	0.72	5000	0.184	6.50	3.67	0.144	18.5
AFB0424LB	-R00 / -F00	24	14.0 to 27.6	0.05	1.20						
AFB0412MB	-R00 / -F00	12	7.0 to 13.8	0.09	1.08	6000	0.230	8.12	5.12	0.202	24.5
AFB0424MB	-R00 / -F00	24	14.0 to 27.6	0.06	1.44						
AFB0412HB	-R00 / -F00	12	7.0 to 13.8	0.10	1.20	7000	0.268	9.46	6.92	0.272	28.5
AFB0424HB	-R00 / -F00	24	14.0 to 27.6	0.08	1.92						
AFB0412HHB	-R00 / -F00	12	7.0 to 13.8	0.13	1.56	8300	0.325	11.48	9.13	0.359	32.0
AFB0424HHB	-R00 / -F00	24	14.0 to 27.6	0.09	2.16						
AFB0412VHB	-R00 / -F00	12	7.0 to 13.8	0.16	1.92	9500	0.368	13.00	11.66	0.459	36.5
AFB0424VHB	-R00 / -F00	24	14.0 to 27.6	0.10	2.40						
AFB0412SHB	-R00 / -F00	12	7.0 to 13.8	0.25	3.00	11000	0.420	14.83	15.26	0.601	41.5
AFB0424SHB	-R00 / -F00	24	14.0 to 27.6	0.12	2.88						

* Function type is optional.
* The max. air flow and the speed are measured in free air ; max. air pressure is measured at zero air flow.
* Noise is measured in anechoic chamber in free air, one meter from intake side.
* All readings are typical values at rated voltage.
* Specifications are subject to change without notice.

Downloaded from Arrow.com.

AFB 45 x 45 x 10 MM SERIES

* Bearing Type
  Ball Bearings
* Material
  Impeller & Frame : Plastic(UL 94V-0)
* Lead Wires :
  UL 1007 AWG #28 OR Equivalent
  Red Wire Positive(+)
  Black Wire Negative(-)
* Weight : 15.5g (0.55 OZ)
* Rib Type Only

■ DIMENSIONS DRAWING

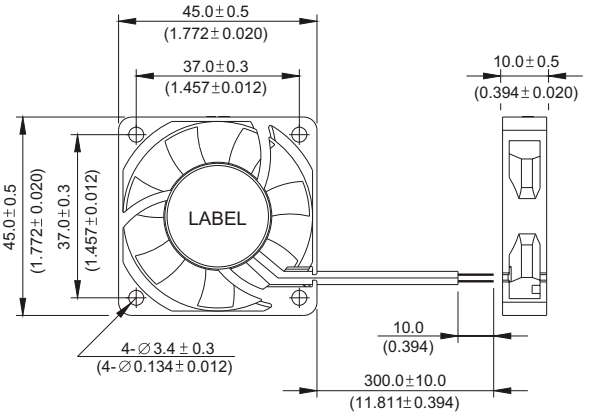

■ P & Q CURVE (AT RATED VOLTAGE)

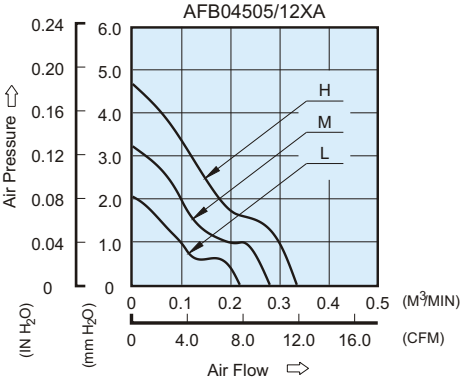

■ MOUNTING PANEL CUTOUT

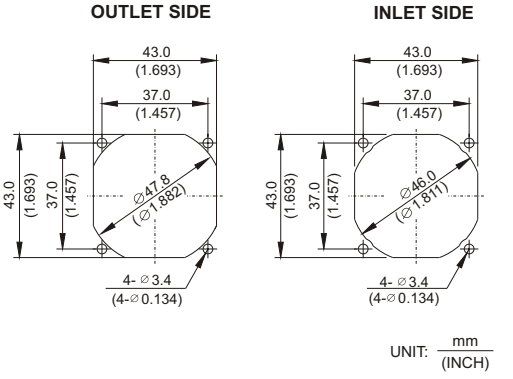

MODEL		Rated Voltage	Operating Voltage Range	Rated Current	Rated Input Power	Speed	Maximum Air Flow		Maximum Air Pressure		Noise
PART NO.	FUNCTION	VDC	VDC	Amp	Watt	R.P.M.	m^3 /min	CFM	mmH_2O	IN H_2O	dB-A
AFB04505LA	-R00 / -F00	5	4.0 to 5.5	0.14	0.70	4000	0.218	7.70	2.05	0.081	24.5
AFB04512LA	-R00 / -F00	12	9.0 to 13.8	0.08	0.96						
AFB04505MA	-R00 / -F00	5	4.0 to 5.5	0.20	1.00	5000	0.279	9.85	3.22	0.127	30.0
AFB04512MA	-R00 / -F00	12	7.0 to 13.8	0.11	1.32						
AFB04512HA	-R00 / -F00	12	7.0 to 13.8	0.17	2.04	6000	0.334	11.80	4.67	0.184	34.5

* Function type is optional.
* The max. air flow and the speed are measured in free air ; max. air pressure is measured at zero air flow.
* Noise is measured in anechoic chamber in free air, one meter from intake side.
* All readings are typical values at rated voltage.
* Specifications are subject to change without notice.

Downloaded from Arrow.com.

AFB 50 x 50 x 15 MM SERIES

* Bearing Type
  Ball Bearings
* Material
  Impeller & Frame : Plastic (UL 94V-0)
* Lead Wires :
  UL 1007 AWG #24 OR Equivalent
  Red Wire Positive (+)
  Black Wire Negative (-)
* Weight : 32g (1.13 oz)
* Rib Type Only

■ DIMENSIONS DRAWING

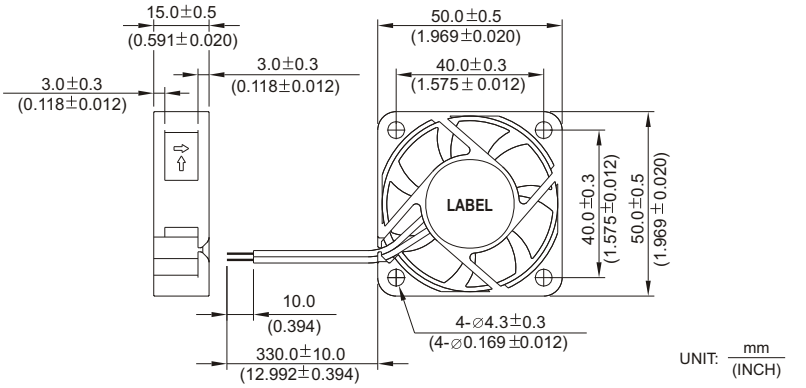

■ P & Q CURVE (AT RATED VOLTAGE)

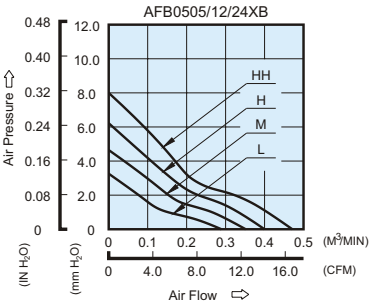

■ MOUNTING PANEL CUTOUT

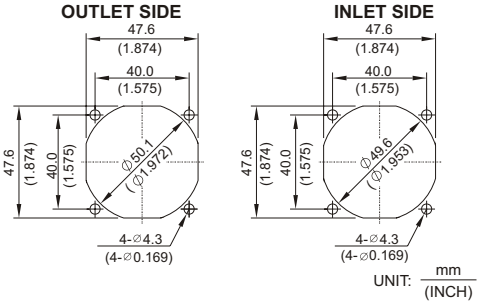

MODEL		Rated Voltage	Operating Voltage Range	Rated Current	Rated Input Power	Speed	Maximum Air Flow		Maximum Air Pressure		Noise
PART NO.	FUNCTION	VDC	VDC	Amp	Watt	R.P.M.	m^3 /min	CFM	mmH_2O	IN H_2O	dB-A
AFB0505LB	-R00 / -F00	5	4.5 to 5.5	0.15	0.75	4000	0.280	9.89	3.20	0.126	24.0
AFB0512LB	-R00 / -F00	12	7.0 to 13.8	0.06	0.72						
AFB0524LB	-R00 / -F00	24	14.0 to 27.6	0.05	1.20						
AFB0505MB	-R00 / -F00	5	4.5 to 5.5	0.22	1.10	4800	0.350	12.36	4.60	0.181	28.0
AFB0512MB	-R00 / -F00	12	7.0 to 13.8	0.08	0.96						
AFB0524MB	-R00 / -F00	24	14.0 to 27.6	0.06	1.44						
AFB0505HB	-R00 / -F00	5	4.5 to 5.5	0.32	1.60	5600	0.400	14.13	6.10	0.240	32.0
AFB0512HB	-R00 / -F00	12	7.0 to 13.8	0.10	1.20						
AFB0524HB	-R00 / -F00	24	14.0 to 27.6	0.07	1.68						
AFB0512HHB	-R00 / -F00	12	7.0 to 13.8	0.13	1.56	6400	0.460	16.24	8.00	0.315	36.0
AFB0524HHB	-R00 / -F00	24	14.0 to 27.6	0.08	1.92						

* Function type is optional.
* The max. air flow and the speed are measured in free air ; max. air pressure is measured at zero air flow.
* Noise is measured in anechoic chamber in free air, one meter from intake side.
* All readings are typical values at rated voltage.
* Specifications are subject to change without notice.
* Both of the ball bearing and the 1 ball + 1 sleeve type are available.

Downloaded from Arrow.com.

AFB 50 x 50 x 20 MM SERIES

* Bearing Type
  Two Ball Bearings
* Material
  Impeller & Frame : Plastic (UL 94V-0)
* Lead Wires :
  UL 1007 AWG #24 OR Equivalent
  Red Wire Positive (+)
  Black Wire Negative (-)
* Weight : 38g (1.34 oz)
* Rib Type Only

■ DIMENSIONS DRAWING

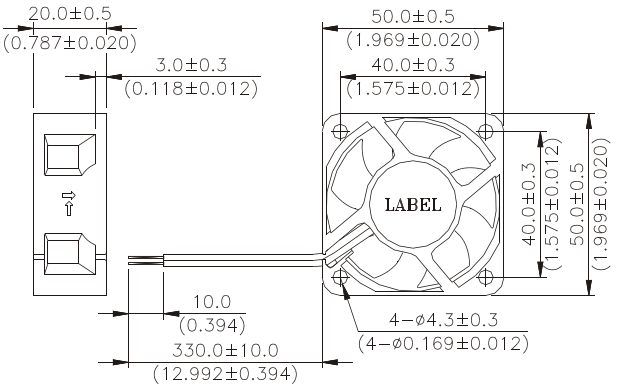

UNIT: mm (INCH)

■ P & Q CURVE (AT RATED VOLTAGE)

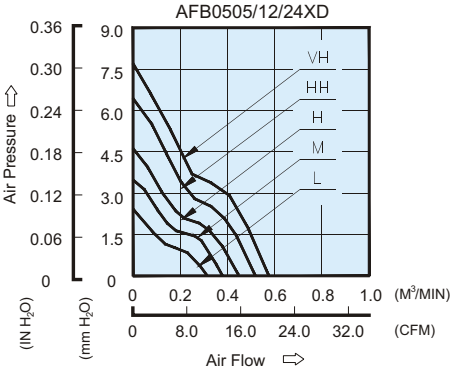

■ MOUNTING PANEL CUTOUT

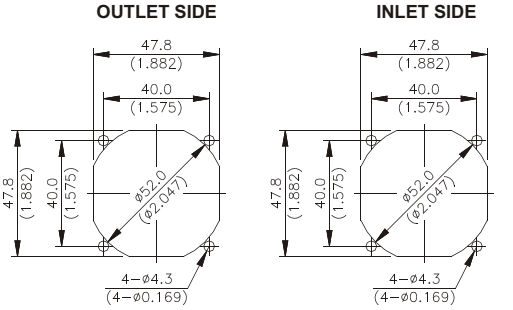

UNIT: mm (INCH)

MODEL		Rated Voltage	Operating Voltage Range	Rated Current	Rated Input Power	Speed	Maximum Air Flow		Maximum Air Pressure		Noise
PART NO.	FUNCTION	VDC	VDC	Amp	Watt	R.P.M.	m^3 /min	CFM	mmH_2O	IN H_2O	dB-A
AFB0505LD	-R00 / -F00	5	4.5 to 5.5	0.14	0.70	4000	0.311	10.98	2.42	0.095	25.0
AFB0512LD	-R00 / -F00	12	7.0 to 13.8	0.06	0.72						
AFB0524LD	-R00 / -F00	24	14.0 to 27.6	0.05	1.20						
AFB0505MD	-R00 / -F00	5	4.5 to 5.5	0.20	1.00	4800	0.379	13.39	3.48	0.137	28.0
AFB0512MD	-R00 / -F00	12	7.0 to 13.8	0.07	0.84						
AFB0524MD	-R00 / -F00	24	14.0 to 27.6	0.06	1.44						
AFB0505HD	-R00 / -F00	5	4.5 to 5.5	0.33	1.65	5600	0.447	15.79	4.62	0.182	33.0
AFB0512HD	-R00 / -F00	12	7.0 to 13.8	0.10	1.20						
AFB0524HD	-R00 / -F00	24	14.0 to 27.6	0.07	1.68						
AFB0512HHD	-R00 / -F00	12	7.0 to 13.8	0.14	1.68	6400	0.518	18.30	6.44	0.254	37.0
AFB0524HHD	-R00 / -F00	24	14.0 to 27.6	0.09	2.16						
AFB0512VHD	-R00 / -F00	12	7.0 to 13.8	0.16	1.92	7000	0.575	20.30	7.70	0.303	40.5
AFB0524VHD	-R00 / -F00	24	14.0 to 27.6	0.10	2.40						

* Function type is optional.
* The max. air flow and the speed are measured in free air ; max. air pressure is measured at zero air flow.
* Noise is measured in anechoic chamber in free air, one meter from intake side.
* All readings are typical values at rated voltage.
* Specifications are subject to change without notice.

Downloaded from Arrow.com.

AFB 60 x 60 x 13 MM SERIES

* Bearing Type :
  Ball Bearings
* Material :
  Impeller & Frame : Plastic(UL 94V-0)
* Lead Wires :
  UL 2468 AWG #28 OR Equivalent
  Red Wire Positive(+)
  Black Wire Negative(-)
* Weight : 33.5g (1.18 OZ)
* Rib Type Only

DIMENSIONS DRAWING

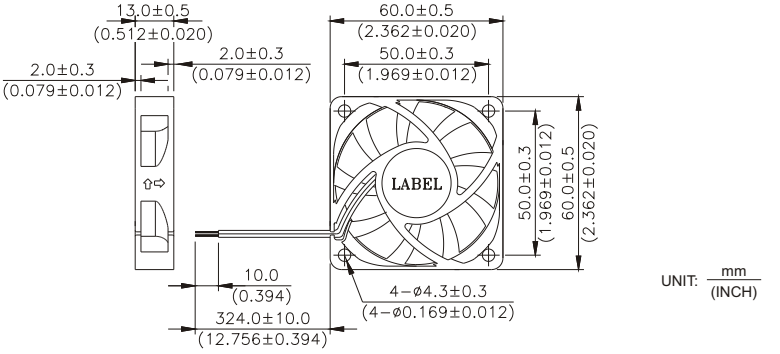

P & Q CURVE (AT RATED VOLTAGE)

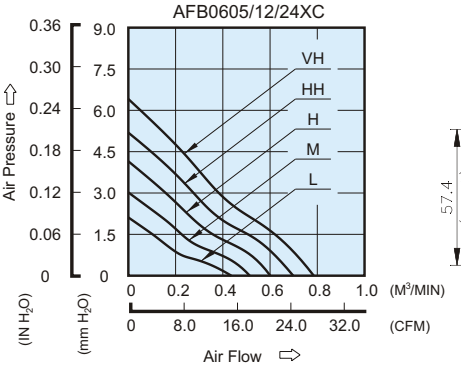

MOUNTING PANEL CUTOUT

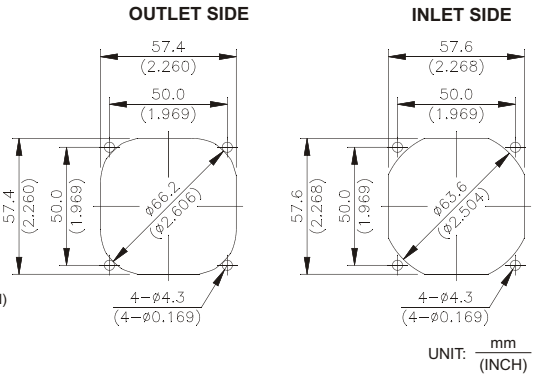

MODEL		Rated Voltage	Operating Voltage Range	Rated Current	Rated Input Power	Speed	Maximum Air Flow		Maximum Air Pressure		Noise
PART NO.	FUNCTION	VDC	VDC	Amp	Watt	R.P.M.	m^3 /min	CFM	mmH_2O	$IN\ H_2O$	dB-A
AFB0605LC	-R00 / -F00	5	4.5 to 5.5	0.12	0.60	3000	0.436	15.40	2.11	0.083	24.0
AFB0612LC	-R00 / -F00	12	7.0 to 13.8	0.08	0.96						
AFB0624LC	-R00 / -F00	24	14.0 to 27.6	0.05	1.20						
AFB0605MC	-R00 / -F00	5	4.5 to 5.5	0.18	0.90	3600	0.514	18.15	3.02	0.119	28.0
AFB0612MC	-R00 / -F00	12	7.0 to 13.8	0.11	1.32						
AFB0624MC	-R00 / -F00	24	14.0 to 27.6	0.06	1.44						
AFB0605HC	-R00 / -F00	5	4.5 to 5.5	0.29	1.45	4200	0.601	21.22	4.15	0.163	31.5
AFB0612HC	-R00 / -F00	12	7.0 to 13.8	0.14	1.68						
AFB0624HC	-R00 / -F00	24	14.0 to 27.6	0.07	1.68						
AFB0612HHC	-R00 / -F00	12	7.0 to 13.8	0.20	2.40	4800	0.698	24.65	5.19	0.204	35.0
AFB0624HHC	-R00 / -F00	24	14.0 to 27.6	0.09	2.16						
AFB0612VHC	-R00 / -F00	12	7.0 to 13.8	0.24	2.88	5400	0.785	27.72	6.41	0.252	38.0
AFB0624VHC	-R00 / -F00	24	14.0 to 27.6	0.12	2.88						

* Function type is optional.
* The max. air flow and the speed are measured in free air ; max. air pressure is measured at zero air flow.
* Noise is measured in anechoic chamber in free air, one meter from intake side.
* All readings are typical values at rated voltage.
* Specifications are subject to change without notice.
* Both of the ball bearing and the 1 ball + 1 Sleeve type are available.

Downloaded from Arrow.com.

AFB 60 x 60 x 15 MM SERIES

* Bearing Type
  Ball Bearings
* Material
  Impeller & Frame : Plastic (UL 94V-0)
* Lead Wires :
  UL 1007 AWG #24 OR Equivalent
  Red Wire Positive (+)
  Black Wire Negative (-)
* Weight : 44g (1.55 oz)
* Rib Type Only

■ DIMENSIONS DRAWING

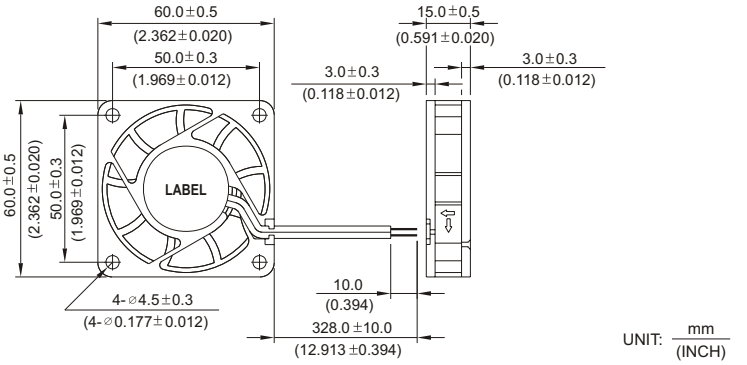

■ P & Q CURVE (AT RATED VOLTAGE)

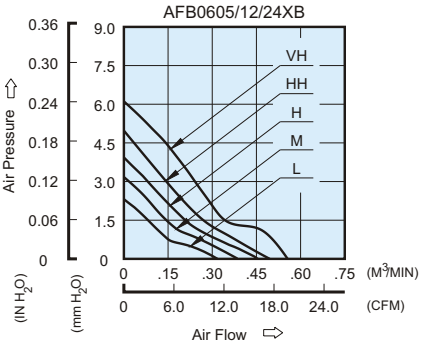

■ MOUNTING PANEL CUTOUT

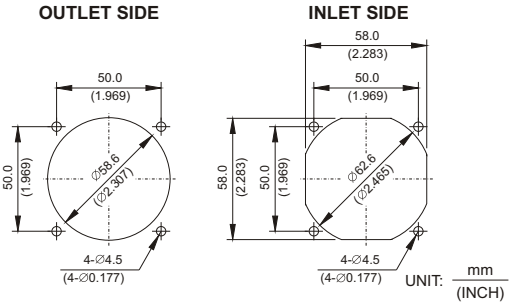

MODEL		Rated Voltage	Operating Voltage Range	Rated Current	Rated Input Power	Speed	Maximum Air Flow		Maximum Air Pressure		Noise
PART NO.	FUNCTION	VDC	VDC	Amp	Watt	R.P.M.	m^3 /min	CFM	mmH_2O	IN H_2O	dB-A
AFB0605LB	/ -F00	5	4.0 to 6.0	0.13	0.65	3000	0.327	11.55	2.21	0.087	24.0
AFB0612LB	-R00 / -F00	12	7.0 to 13.8	0.07	0.84						
AFB0624LB	-R00 / -F00	24	14.0 to 27.6	0.04	0.96						
AFB0605MB	/ -F00	5	4.0 to 6.0	0.20	1.00	3500	0.381	13.45	3.01	0.119	29.0
AFB0612MB	-R00 / -F00	12	7.0 to 13.8	0.08	0.96						
AFB0624MB	-R00 / -F00	24	14.0 to 27.6	0.06	1.44						
AFB0605HB	/ -F00	5	4.0 to 6.0	0.30	1.50	4000	0.435	15.36	3.93	0.155	32.0
AFB0612HB	-R00 / -F00	12	7.0 to 13.8	0.10	1.20						
AFB0624HB	-R00 / -F00	24	14.0 to 27.6	0.08	1.92						
AFB0605HHB	/ -F00	5	4.0 to 6.0	0.40	2.00	4500	0.490	17.30	4.97	0.195	35.0
AFB0612HHB	-R00 / -F00	12	7.0 to 13.8	0.12	1.44						
AFB0624HHB	-R00 / -F00	24	14.0 to 27.6	0.10	2.40						
AFB0612VHB	-R00 / -F00	12	7.0 to 13.8	0.16	1.92	5000	0.550	19.42	6.10	0.240	37.0
AFB0624VHB	-R00 / -F00	24	14.0 to 27.6	0.11	2.64						

* Function type is optional.
* The max. air flow and the speed are measured in free air ; max. air pressure is measured at zero air flow.
* Noise is measured in anechoic chamber in free air, one meter from intake side.
* All readings are typical values at rated voltage.
* Specifications are subject to change without notice.
* Both of the ball bearing and the 1 ball + 1 Sleeve type are available.

Downloaded from Arrow.com.

AFB 60 x 60 x 20 MM SERIES

* Bearing Type
  Ball Bearings
* Material
  Impeller & Frame : Plastic (UL 94V-0)
* Lead Wires :
  UL 1007 AWG #24 OR Equivalent
  Red Wire Positive (+)
  Black Wire Negative (-)
* Weight : 62g (2.19 oz)
* Rib Type Only

DIMENSIONS DRAWING

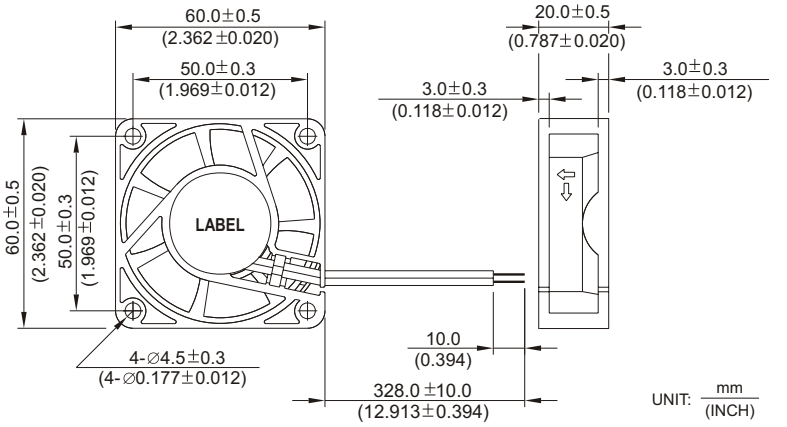

P & Q CURVE (AT RATED VOLTAGE)

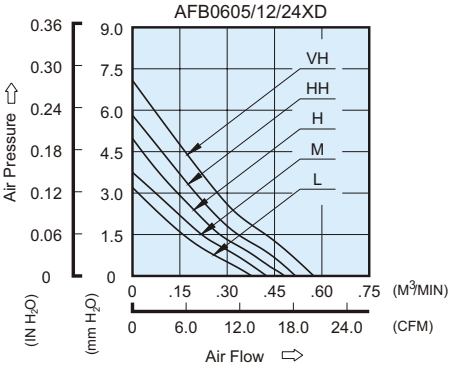

MOUNTING PANEL CUTOUT

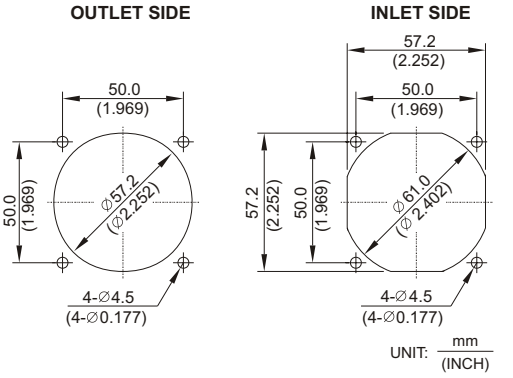

MODEL		Rated Voltage	Operating Voltage Range	Rated Current	Rated Input Power	Speed	Maximum Air Flow		Maximum Air Pressure		Noise
PART NO.	FUNCTION	VDC	VDC	Amp	Watt	R.P.M.	m^3 /min	CFM	mmH_2O	IN H_2O	dB-A
AFB0605LD	/ -F00	5	4.5 to 5.5	0.14	0.70	3200	0.370	13.06	3.03	0.119	24.0
AFB0612LD	-R00 / -F00	12	7.0 to 13.8	0.07	0.84						
AFB0624LD	-R00 / -F00	24	14.0 to 27.6	0.03	0.72						
AFB0605MD	/ -F00	5	4.5 to 5.5	0.19	0.95	3600	0.420	14.83	3.83	0.151	26.0
AFB0612MD	-R00 / -F00	12	7.0 to 13.8	0.09	1.08						
AFB0624MD	-R00 / -F00	24	14.0 to 27.6	0.04	0.96						
AFB0605HD	/ -F00	5	4.5 to 5.5	0.24	1.20	4000	0.470	16.60	4.80	0.189	28.0
AFB0612HD	-R00 / -F00	12	7.0 to 13.8	0.11	1.32						
AFB0624HD	-R00 / -F00	24	14.0 to 27.6	0.05	1.20						
AFB0605HHD	/ -F00	5	4.5 to 5.5	0.33	1.65	4400	0.520	18.36	5.81	0.229	31.0
AFB0612HHD	-R00 / -F00	12	7.0 to 13.8	0.15	1.80						
AFB0624HHD	-R00 / -F00	24	14.0 to 27.6	0.07	1.68						
AFB0612VHD	-R00 / -F00	12	7.0 to 13.8	0.18	2.16	4800	0.560	19.78	7.00	0.275	33.0
AFB0624VHD	-R00 / -F00	24	14.0 to 27.6	0.09	2.16						

* Function type is optional.
* The max. air flow and the speed are measured in free air ; max. air pressure is measured at zero air flow.
* Noise is measured in anechoic chamber in free air, one meter from intake side.
* All readings are typical values at rated voltage.
* Specifications are subject to change without notice.

Downloaded from Arrow.com.

AFB 60 x 60 x 20 MM SERIES

New

* Bearing Type
  Ball Bearings
* Material
* Impeller & Frame : Plastic (UL94V-0)
* Lead Wires :
  UL 1007 AWG#24 OR Equivalent
  Red Wire Positive (+)
  Black Wire Negative (-)
* Weight : 56g (1.98 oz)

■ DIMENSIONS DRAWING

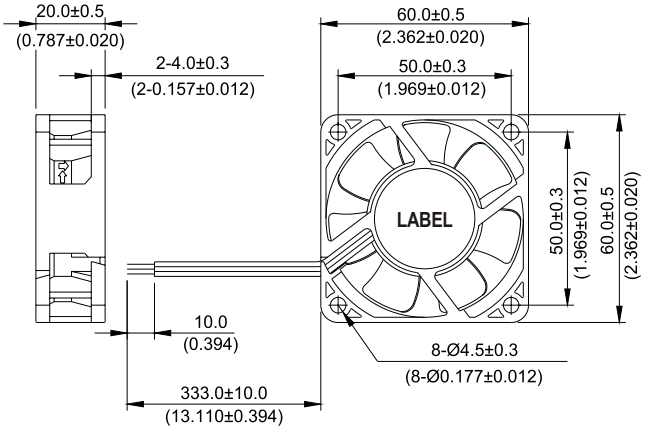

UNIT: mm (INCH)

■ P & Q CURVE (AT RATED VOLTAGE)

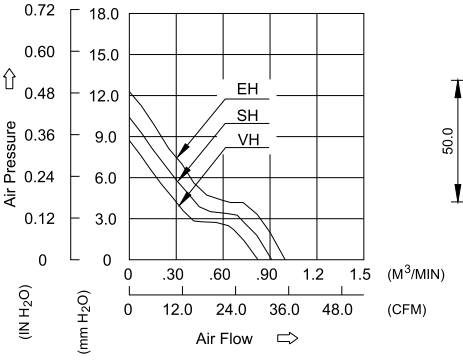

■ MOUNTING PANEL CUTOUT

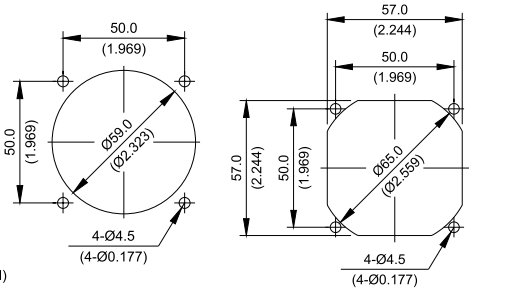

UNIT: mm (INCH)

MODEL			Rated Voltage	Operating Voltage Range	Rated Current	Rated Input Power	Speed	Maximum Air Flow		Maximum Air Pressure		Noise
PART NO.	REV.	FUNCTION	VDC	VDC	Amp	Watt	R.P.M.	m^3 /min	CFM	mmH_2O	IN H_2O	dB-A
AFB0612VHD	-A	-R00 / -F00	12	7.0 to 13.8	0.19	2.28	5400	0.823	29.06	8.72	0.343	41.0
AFB0612SHD	-A	-R00 / -F00	12	7.0 to 13.8	0.28	3.36	6000	0.911	32.17	10.41	0.410	43.0
AFB0612EHD	-A	-R00 / -F00	12	7.0 to 13.8	0.31	3.72	6600	0.997	35.21	12.29	0.484	45.0

* Function type is optional.
* The max. air flow and the speed are measured in free air ; max. air pressure is measured at zero air flow.
* Noise is measured in anechoic chamber in free air, one meter from intake side.
* All readings are typical values at rated voltage.
* Specifications are subject to change without notice.

Downloaded from Arrow.com.

AFB 60 x 60 x 25.4 MM SERIES

* Bearing Type
  Ball Bearings
* Material
  Impeller & Frame : Plastic (UL 94V-0)
* Lead Wires :
  UL 1007 AWG #24 OR Equivalent
  Red Wire Positive (+)
  Black Wire Negative (-)
* Weight : 80g (2.82 oz)

DIMENSIONS DRAWING

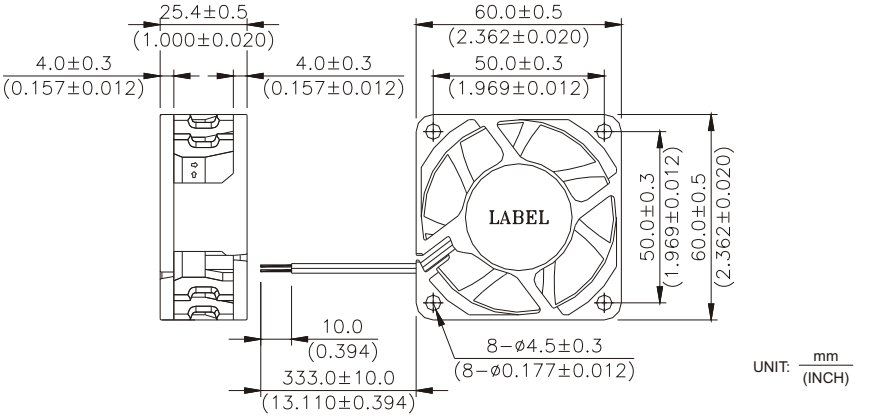

P & Q CURVE (AT RATED VOLTAGE)

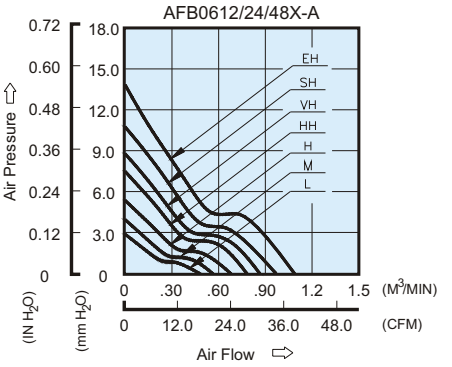

MOUNTING PANEL CUTOUT

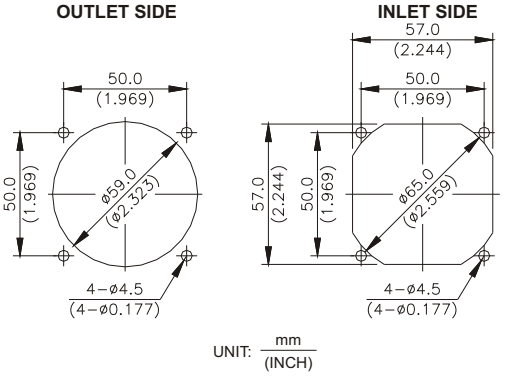

MODEL			Rated Voltage	Operating Voltage Range	Rated Current	Rated Input Power	Speed	Maximum Air Flow		Maximum Air Pressure		Noise
PART NO.	REV.	FUNCTION	VDC	VDC	Amp	Watt	R.P.M.	m^3 /min	CFM	mmH_2O	IN H_2O	dB-A
AFB0612L	-A	R00/F00	12	4.0 to 13.8	0.08	0.96	3100	0.476	16.81	2.86	0.113	26.5
AFB0624L	-A	R00/F00	24	14.0 to 27.6	0.06	1.44						
AFB0612M	-A	R00/F00	12	4.0 to 13.8	0.13	1.56	3600	0.560	19.78	3.93	0.155	31.0
AFB0624M	-A	R00/F00	24	14.0 to 27.6	0.07	1.68						
AFB0612H	-A	R00/F00	12	4.0 to 13.8	0.14	1.68	4250	0.662	23.38	5.35	0.211	34.0
AFB0624H	-A	R00/F00	24	14.0 to 27.6	0.09	2.16						
AFB0612HH	-A	R00/F00	12	4.0 to 13.8	0.17	2.04	5000	0.780	27.55	7.47	0.294	40.0
AFB0624HH	-A	R00/F00	24	14.0 to 27.6	0.11	2.64						
AFB0648HH	-A	R00/F00	48	28.0 to 56.0	0.08	3.84						
AFB0612VH	-A	R00/F00	12	4.0 to 13.8	0.23	2.76	5500	0.863	30.48	8.76	0.345	42.5
AFB0624VH	-A	R00/F00	24	14.0 to 27.6	0.14	3.36						
AFB0648VH	-A	R00/F00	48	28.0 to 56.0	0.09	4.32						
AFB0612SH	-A	R00/F00	12	4.0 to 13.8	0.27	3.24	6000	0.967	34.15	10.73	0.422	44.5
AFB0624SH	-A	R00/F00	24	14.0 to 27.6	0.17	4.08						
AFB0648SH	-A	R00/F00	48	28.0 to 56.0	0.11	5.28						
AFB0612EH	-A	R00/F00	12	4.0 to 13.8	0.38	4.56	6800	1.086	38.35	13.81	0.544	46.5
AFB0624EH	-A	R00/F00	24	14.0 to 27.6	0.24	5.76						
AFB0648EH	-A	R00/F00	48	28.0 to 56.0	0.14	6.72						

* Function type is optional.
* The max. air flow and the speed are measured in free air ; max. air pressure is measured at zero air flow.
* Noise is measured in anechoic chamber in free air, one meter from intake side.
* All readings are typical values at rated voltage.
* Specifications are subject to change without notice.

Downloaded from Arrow.com.

AFB 60 x 60 x 25.4 MM SERIES

New

* Bearing Type
  Ball Bearings
* Material
  Impeller & Frame: Plastic (UL94V-0)
* Lead Wires :
  UL 1061 AWG#24 OR Equivalent
  Red Wire Positive (+)
  Black Wire Negative (-)
* Weight : 77g (2.72 oz)

■ DIMENSIONS DRAWING

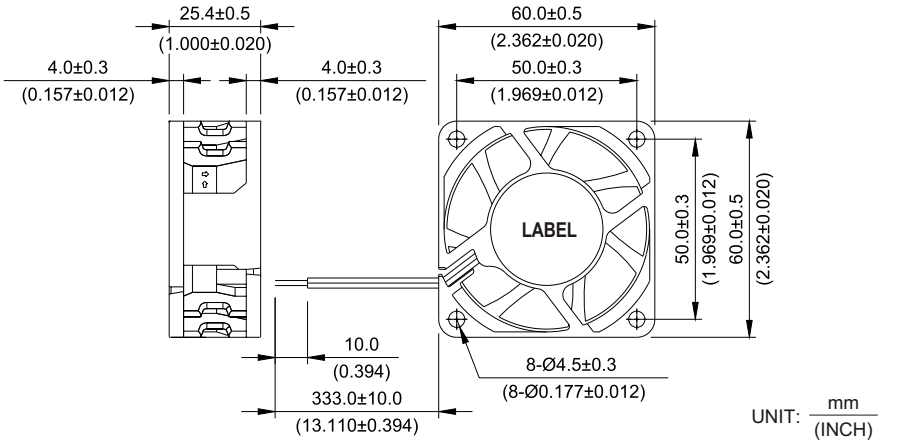

■ P & Q CURVE (AT RATED VOLTAGE)

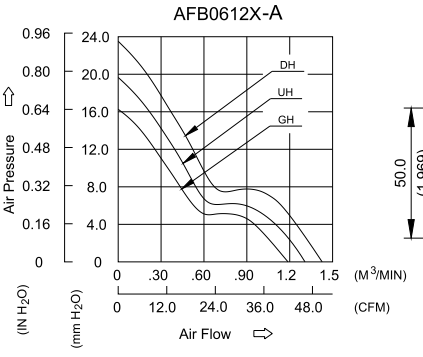

■ MOUNTING PANEL CUTOUT

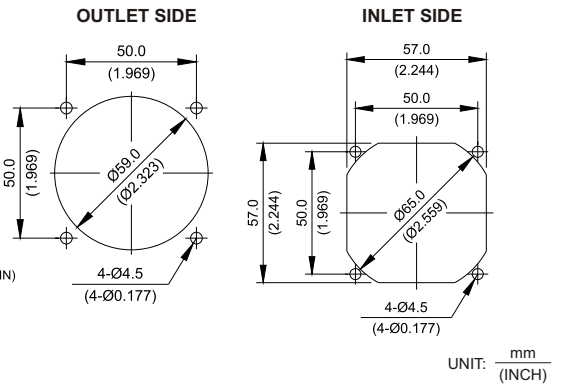

MODEL			Rated Voltage	Operating Voltage Range	Rated Current	Rated Input Power	Speed	Maximum Air Flow		Maximum Air Pressure		Noise
PART NO.	REV.	FUNCTION	VDC	VDC	Amp	Watt	R.P.M.	m^3 /min	CFM	mmH_2O	IN H_2O	dB-A
AFB0612GH	-A	-R00 / -F00	12	7.0 to 13.2	0.55	6.60	7500	1.188	41.95	16.27	0.640	50.5
AFB0612UH	-A	-R00 / -F00	12	7.0 to 13.2	0.69	8.28	8200	1.307	46.16	19.66	0.774	52.5
AFB0612DH	-A	-R00 / -F00	12	7.0 to 13.2	0.84	10.08	9000	1.427	50.40	23.52	0.926	55.0

* Function type is optional.
* The max. air flow and the speed are measured in free air ; max. air pressure is measured at zero air flow.
* Noise is measured in anechoic chamber in free air, one meter from intake side.
* All readings are typical values at rated voltage.
* Specifications are subject to change without notice.

Downloaded from Arrow.com.

AFB 60 x 60 x 38 MM SERIES

* Bearing Type
  Ball Bearings
* Material
  Impeller & Frame : Plastic (UL 94V-0)
* Lead Wires :
  UL 1007 AWG #24 OR Equivalent
  Red Wire Positive (+)
  Black Wire Negative (-)
* Weight : 117g (4.13 oz)

■ DIMENSIONS DRAWING

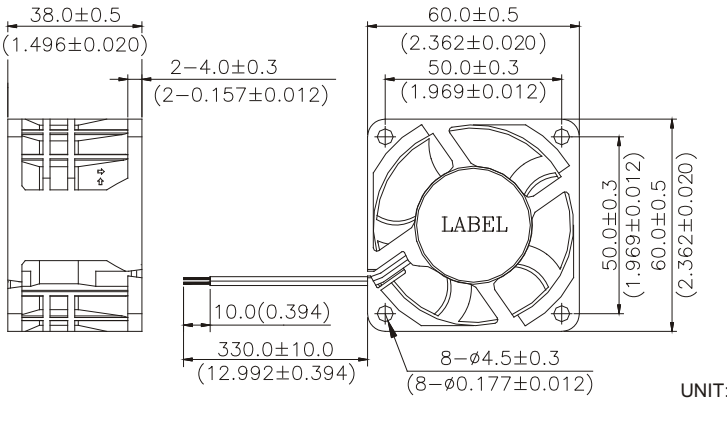

■ P & Q CURVE (AT RATED VOLTAGE)

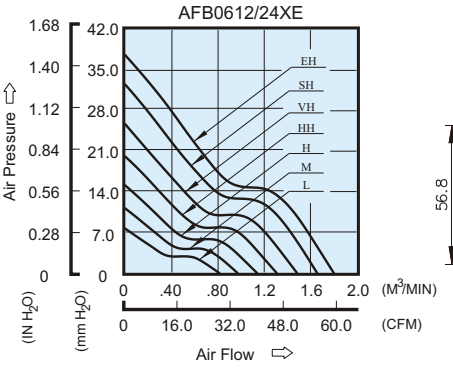

■ MOUNTING PANEL CUTOUT

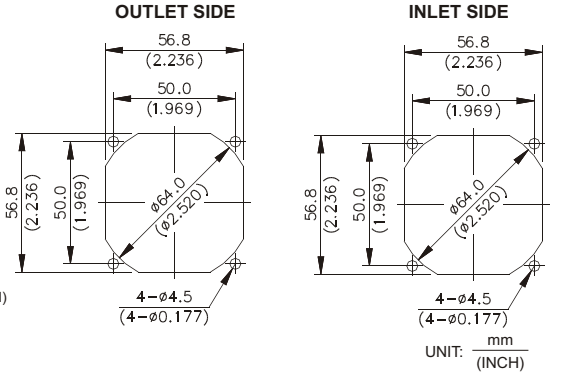

MODEL		Rated Voltage	Operating Voltage Range	Rated Current	Rated Input Power	Speed	Maximum Air Flow		Maximum Air Pressure		Noise
PART NO.	FUNCTION	VDC	VDC	Amp	Watt	R.P.M.	m^3 /min	CFM	mmH_2O	IN H_2O	dB-A
AFB0612LE	-R00 / -F00	12	7.0 to 13.8	0.13	2.76	5000	0.816	28.81	7.76	0.306	37.0
AFB0624LE	-R00 / -F00	24	14.0 to 27.6	0.23	3.12						
AFB0612ME	-R00 / -F00	12	7.0 to 13.8	0.33	3.96	6000	0.972	34.34	11.23	0.442	42.0
AFB0624ME	-R00 / -F00	24	14.0 to 27.6	0.18	4.32						
AFB0612HE	-R00 / -F00	12	7.0 to 13.8	0.45	5.40	7000	1.139	40.22	15.18	0.598	46.0
AFB0624HE	-R00 / -F00	24	14.0 to 27.6	0.25	6.00						
AFB0612HHE	-R00 / -F00	12	7.0 to 13.8	0.68	8.16	8000	1.307	46.17	20.14	0.793	50.0
AFB0624HHE	-R00 / -F00	24	14.0 to 27.6	0.38	9.12						
AFB0612VHE	-R00 / -F00	12	7.0 to 13.8	0.85	10.2	9000	1.481	52.30	25.71	1.012	53.5
AFB0612SHE	-R00 / -F00	12	7.0 to 13.8	1.10	13.2	10000	1.651	58.32	32.50	1.280	56.5
AFB0612EHE	-R00 / -F00	12	7.0 to 13.2	1.40	16.8	11000	1.796	63.44	37.55	1.478	60.0

* Function type is optional.
* The max. air flow and the speed are measured in free air ; max. air pressure is measured at zero air flow.
* Noise is measured in anechoic chamber in free air, one meter from intake side.
* All readings are typical values at rated voltage.
* Specifications are subject to change without notice.

Downloaded from Arrow.com.

AFB 60 x 60 x 38 MM SERIES

New

* Bearing Type
  Ball Bearings
* Material
  Impeller & Frame: Plastic (UL94V-0)
* Lead Wires :
  UL 1007 AWG#24 OR Equivalent
  Red Wire Positive (+)
  Black Wire Negative (-)
* Weight : 117g (4.12 oz)

■ DIMENSIONS DRAWING

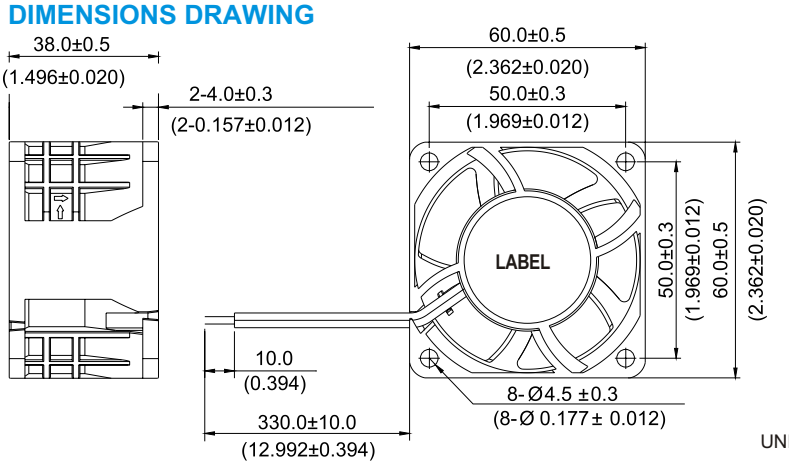

■ P & Q CURVE (AT RATED VOLTAGE)

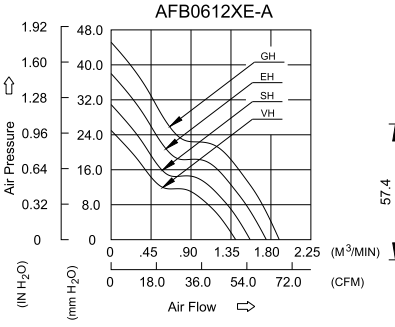

■ MOUNTING PANEL CUTOUT

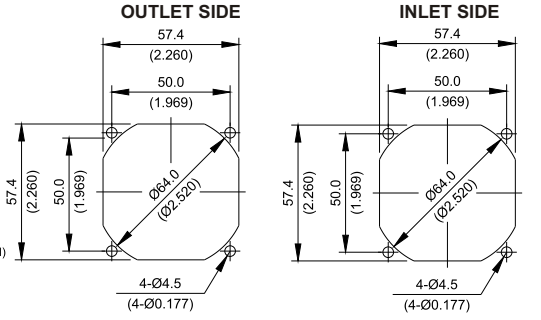

UNIT: mm (INCH)

MODEL			Rated Voltage	Operating Voltage Range	Rated Current	Rated Input Power	Speed	Maximum Air Flow		Maximum Air Pressure		Noise
PART NO.	REV.	FUNCTION	VDC	VDC	Amp	Watt	R.P.M.	m^3 /min	CFM	mmH_2O	IN H_2O	dB-A
AFB0612VHE	-A	-R00 / -F00	12	7.0 to 13.8	0.68	8.16	9000	1.403	49.54	25.00	0.984	54.0
AFB0612SHE	-A	-R00 / -F00	12	7.0 to 13.8	0.88	10.56	10000	1.566	55.29	30.92	1.217	57.0
AFB0612EHE	-A	-R00 / -F00	12	7.0 To 13.8	1.12	13.44	11000	1.748	61.72	38.00	1.496	60.0
AFB0612GHE	-A	-R00 / -F00	12	7.0 To 13.2	1.50	18.00	12000	1.890	66.75	44.17	1.739	61.5

* Function type is optional.
* The max. air flow and the speed are measured in free air ; max. air pressure is measured at zero air flow.
* Noise is measured in anechoic chamber in free air, one meter from intake side.
* All readings are typical values at rated voltage.
* Specifications are subject to change without noti

Downloaded from Arrow.com.

AFB 70 x 70 x 13 MM SERIES

* Bearing Type:
  Ball Bearings
* Material :
  Impeller & Frame : Plastic(UL 94V-0)
* Lead Wires :
  UL 2468 AWG #28 OR Equivalent
  Red Wire Positive(+)
  Black Wire Negative(-)
* Weight : 46g (1.62 OZ)
* Rib Type Only

DIMENSIONS DRAWING

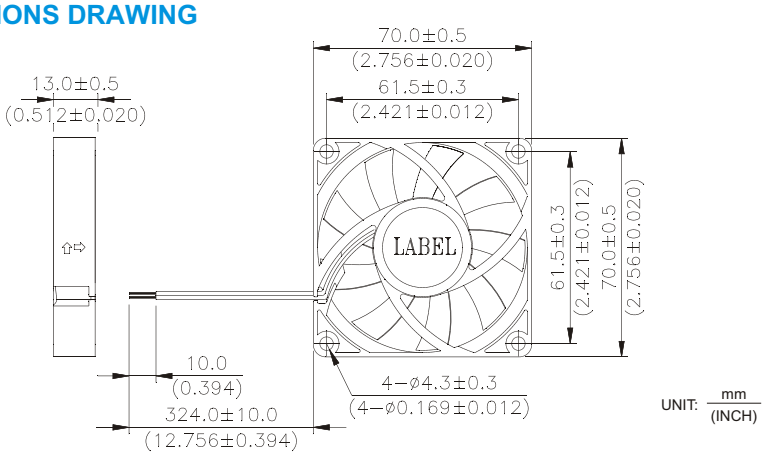

P & Q CURVE (AT RATED VOLTAGE)

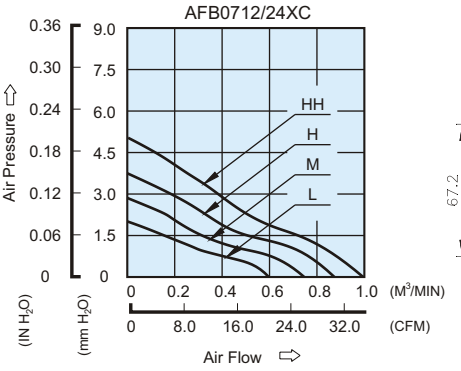

MOUNTING PANEL CUTOUT

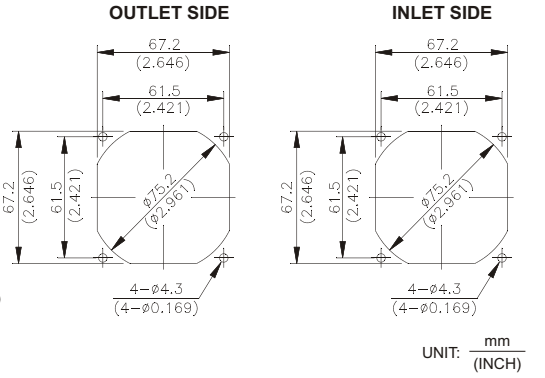

MODEL		Rated Voltage	Operating Voltage Range	Rated Current	Rated Input Power	Speed	Maximum Air Flow		Maximum Air Pressure		Noise
PART NO.	FUNCTION	VDC	VDC	Amp	Watt	R.P.M.	m^3 /min	CFM	mmH_2O	$IN\ H_2O$	dB-A
AFB0712LC	-R00 / -F00	12	4.0 to 13.8	0.09	1.08	2800	0.600	21.19	2.01	0.079	27.0
AFB0724LC	-R00 / -F00	24	14.0 to 27.6	0.07	1.68						
AFB0712MC	-R00 / -F00	12	4.0 to 13.8	0.16	1.92	3300	0.750	26.49	2.89	0.113	31.5
AFB0724MC	-R00 / -F00	24	14.0 to 27.6	0.09	2.16						
AFB0712HC	-R00 / -F00	12	4.0 to 13.8	0.22	2.64	3800	0.878	31.01	3.75	0.148	35.0
AFB0724HC	-R00 / -F00	24	14.0 to 27.6	0.14	3.36						
AFB0712HHC	-R00 / -F00	12	4.0 to 13.8	0.28	3.36	4300	0.991	35.00	4.97	0.196	38.5
AFB0724HHC	-R00 / -F00	24	14.0 to 27.6	0.17	4.08						

* Function type is optional.
* The max. air flow and the speed are measured in free air ; max. air pressure is measured at zero air flow.
* Noise is measured in anechoic chamber in free air, one meter from intake side.
* All readings are typical values at rated voltage.
* Specifications are subject to change without notice.
* Both of the ball bearing and the 1 ball + 1 Sleeve type are available.

Downloaded from Arrow.com.

AFB 70 x 70 x 15 MM SERIES

* Bearing Type :
  Ball Bearings
* Material :
  Impeller & Frame : Plastic(UL 94V-0)
* Lead Wires :
  UL 1007 AWG #24 OR Equivalent
  Red Wire Positive(+)
  Black Wire Negative(-)
* Weight : 47g (1.66 OZ)
* Rib Type Only

■ DIMENSIONS DRAWING

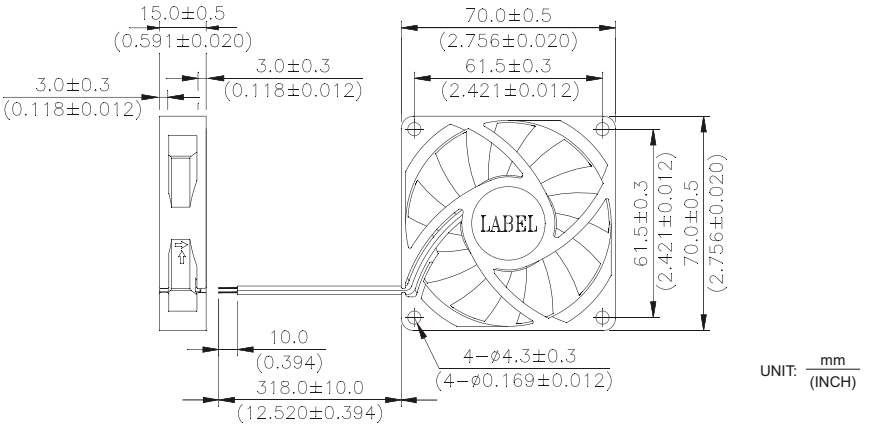

■ P & Q CURVE (AT RATED VOLTAGE)

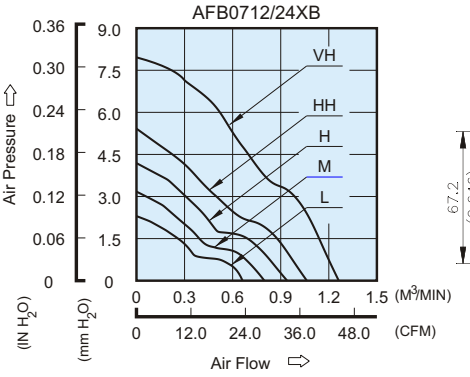

■ MOUNTING PANEL CUTOUT

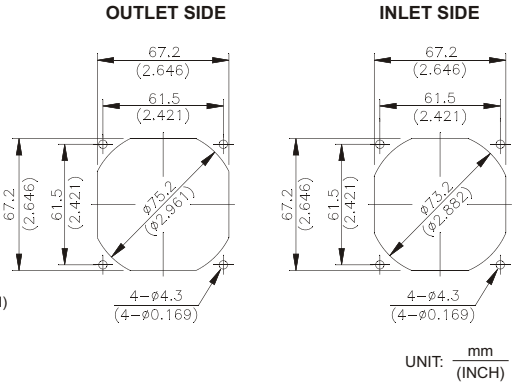

MODEL		Rated Voltage	Operating Voltage Range	Rated Current	Rated Input Power	Speed	Maximum Air Flow		Maximum Air Pressure		Noise
PART NO.	FUNCTION	VDC	VDC	Amp	Watt	R.P.M.	m^3 /min	CFM	mmH_2O	IN H_2O	dB-A
AFB0712LB	-R00 / -F00	12	4.0 to 13.8	0.08	0.96	2800	0.662	23.38	2.27	0.089	26.5
AFB0724LB	-R00 / -F00	24	14.0 to 27.6	0.06	1.44						
AFB0712MB	-R00 / -F00	12	4.0 to 13.8	0.14	1.68	3300	0.798	28.18	3.12	0.123	31.0
AFB0724MB	-R00 / -F00	24	14.0 to 27.6	0.09	2.16						
AFB0712HB	-R00 / -F00	12	4.0 to 13.8	0.18	2.16	3800	0.940	33.20	4.12	0.162	34.5
AFB0724HB	-R00 / -F00	24	14.0 to 27.6	0.12	2.88						
AFB0712HHB	-R00 / -F00	12	4.0 to 13.8	0.26	3.12	4300	1.063	37.54	5.33	0.210	38.5
AFB0724HHB	-R00 / -F00	24	14.0 to 27.6	0.15	3.60						
AFB0712VHB	-R00 / -F00	12	4.0 to 12.6	0.37	4.44	5200	1.287	45.45	7.79	0.306	44.0

* Function type is optional.
* The max. air flow and the speed are measured in free air ; max. air pressure is measured at zero air flow.
* Noise is measured in anechoic chamber in free air, one meter from intake side.
* All readings are typical values at rated voltage.
* Specifications are subject to change without notice.
* Both of the ball bearing and the 1 ball + 1 Sleeve type are available(except "AFB0712VHB).

Downloaded from Arrow.com.

AFB 70 x 70 x 20 MM SERIES

* Bearing Type
  Ball Bearings
* Material
  Impeller & Frame : Plastic (UL 94V-0)
* Lead Wires :
  UL 1007 AWG #24 OR Equivalent
  Red Wire Positive (+)
  Black Wire Negative (-)
* Weight : 68g (2.40 oz)
* Rib Type Only

■ DIMENSIONS DRAWING

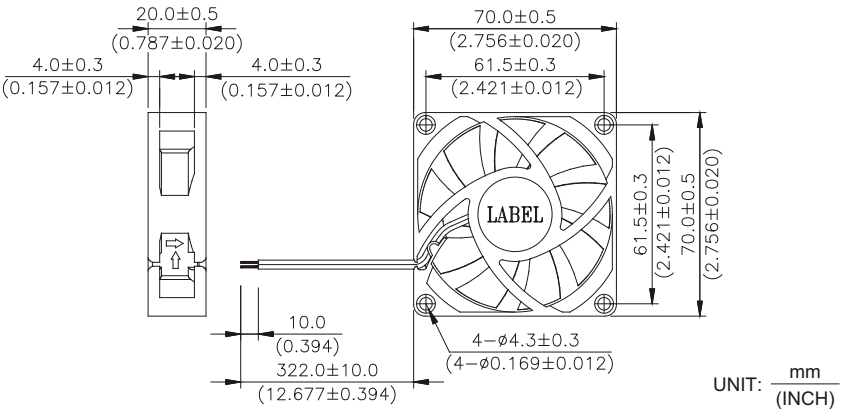

■ P & Q CURVE (AT RATED VOLTAGE)

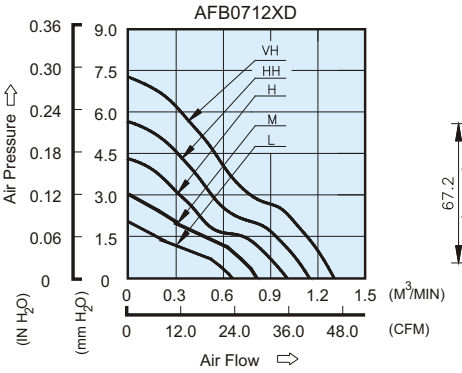

■ MOUNTING PANEL CUTOUT

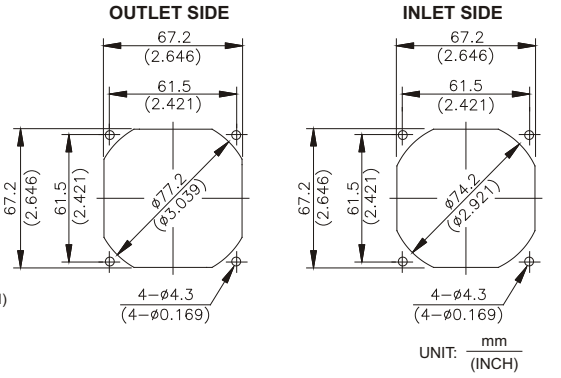

MODEL		Rated Voltage	Operating Voltage Range	Rated Current	Rated Input Power	Speed	Maximum Air Flow		Maximum Air Pressure		Noise
PART NO.	FUNCTION	VDC	VDC	Amp	Watt	R.P.M.	m^3 /min	CFM	mmH_2O	IN H_2O	dB-A
AFB0712LD	-R00 / -F00	12	5.0 to 13.8	0.06	0.72	2600	0.682	24.08	2.01	0.079	27.0
AFB0712MD	-R00 / -F00	12	5.0 to 13.8	0.11	1.32	3200	0.826	29.16	2.99	0.117	32.0
AFB0712HD	-R00 / -F00	12	5.0 to 13.8	0.18	2.16	3800	1.003	35.42	4.30	0.169	36.5
AFB0712HHD	-R00 / -F00	12	5.0 to 13.8	0.25	3.00	4400	1.145	40.43	5.64	0.222	40.5
AFB0712VHD	-R00 / -F00	12	5.0 to 13.2	0.35	4.20	5000	1.327	46.86	7.24	0.285	44.3

* Function type is optional.
* The max. air flow and the speed are measured in free air ; max. air pressure is measured at zero air flow.
* Noise is measured in anechoic chamber in free air, one meter from intake side.
* All readings are typical values at rated voltage.
* Specifications are subject to change without notice.
* Both of the ball bearing and the 1 ball + 1 Sleeve type are available.

Downloaded from Arrow.com.

AFB 70 x 70 x 25.4 MM SERIES

* Bearing Type
  Ball Bearings
* Material
  Impeller & Frame : Plastic (UL 94V-0)
* Lead Wires :
  UL 1007 AWG #24 OR Equivalent
  Red Wire Positive (+)
  Black Wire Negative (-)
* Weight : 77g (2.72 oz)

DIMENSIONS DRAWING

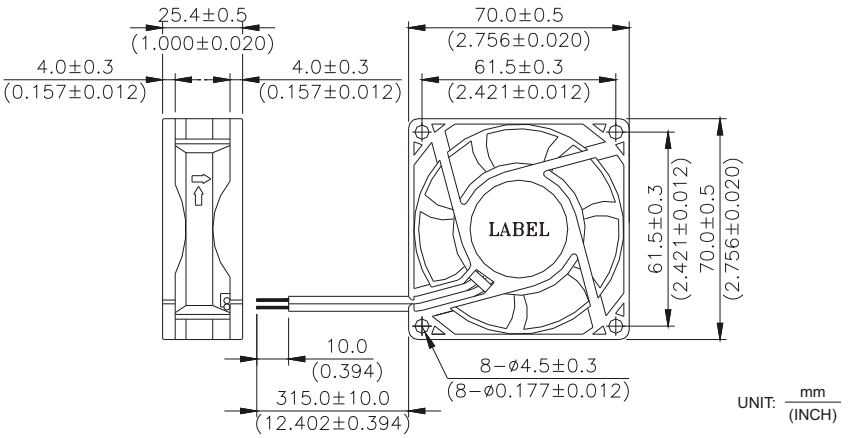

P & Q CURVE (AT RATED VOLTAGE)

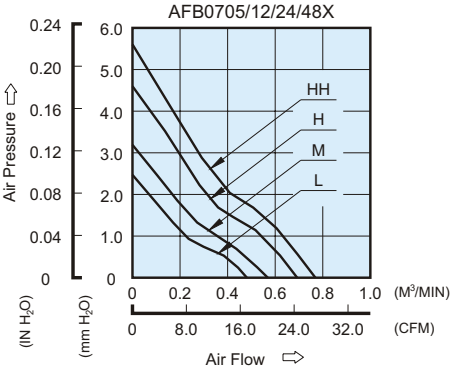

MOUNTING PANEL CUTOUT

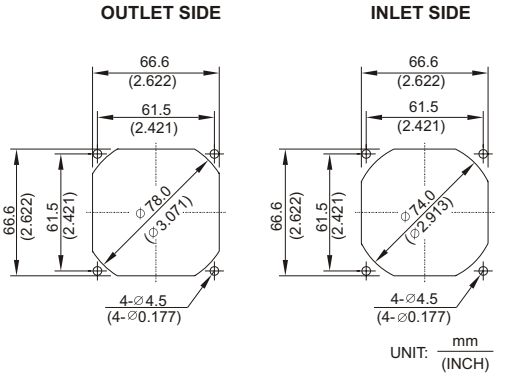

MODEL		Rated Voltage	Operating Voltage Range	Rated Current	Rated Input Power	Speed	Maximum Air Flow		Maximum Air Pressure		Noise
PART NO.	FUNCTION	VDC	VDC	Amp	Watt	R.P.M.	m^3 /min	CFM	mmH_2O	IN H_2O	dB-A
AFB0705L	/ -F00	5	4.5 to 5.5	0.15	0.75	2600	0.480	16.95	2.45	0.097	24.5
AFB0712L	-R00 / -F00	12	7.0 to 13.8	0.08	0.96						
AFB0724L	-R00 / -F00	24	14.0 to 27.6	0.04	0.96						
AFB0748L	-R00 / -F00	48	28.0 to 56.0	0.03	1.44						
AFB0705M	/ -F00	5	4.5 to 5.5	0.22	1.10	3000	0.570	20.13	3.15	0.124	28.0
AFB0712M	-R00 / -F00	12	7.0 to 13.8	0.10	1.20						
AFB0724M	-R00 / -F00	24	14.0 to 27.6	0.05	1.20						
AFB0748M	-R00 / -F00	48	28.0 to 56.0	0.04	1.92						
AFB0705H	/ -F00	5	4.5 to 5.5	0.40	2.00	3600	0.680	24.01	4.46	0.176	32.0
AFB0712H	-R00 / -F00	12	7.0 to 13.8	0.13	1.56						
AFB0724H	-R00 / -F00	24	14.0 to 27.6	0.08	1.92						
AFB0748H	-R00 / -F00	48	28.0 to 56.0	0.04	1.92						
AFB0712HH	-R00 / -F00	12	4.0 to 13.8	0.17	2.04	4000	0.770	27.19	5.47	0.215	35.0
AFB0724HH	-R00 / -F00	24	14.0 to 27.6	0.10	2.40						
AFB0748HH	-R00 / -F00	48	28.0 to 56.0	0.05	2.40						

* Function type is optional.
* The max. air flow and the speed are measured in free air ; max. air pressure is measured at zero air flow.
* Noise is measured in anechoic chamber in free air, one meter from intake side.
* All readings are typical values at rated voltage.
* Specifications are subject to change without notice.

Downloaded from Arrow.com.

AFB 70 x 70 x 25.4 MM SERIES

* Bearing Type
  Ball Bearings
* Material
  Impeller & Frame : Plastic (UL 94V-0)
* Lead Wires :
  UL 1007 AWG #24 OR Equivalent
  Red Wire Positive (+)
  Black Wire Negative (-)
* Weight : 90g (3.17 oz)

■ DIMENSIONS DRAWING

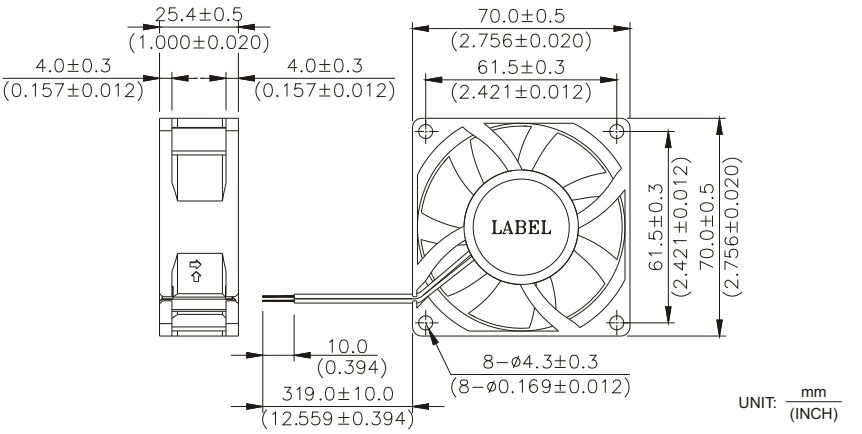

■ P & Q CURVE (AT RATED VOLTAGE)

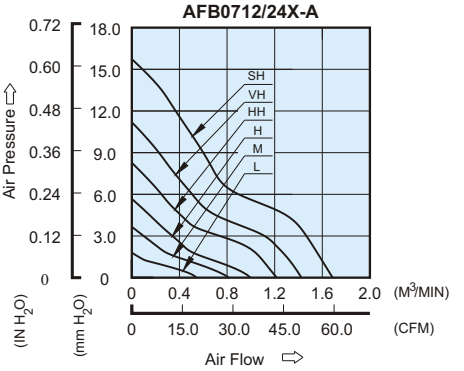

■ MOUNTING PANEL CUTOUT

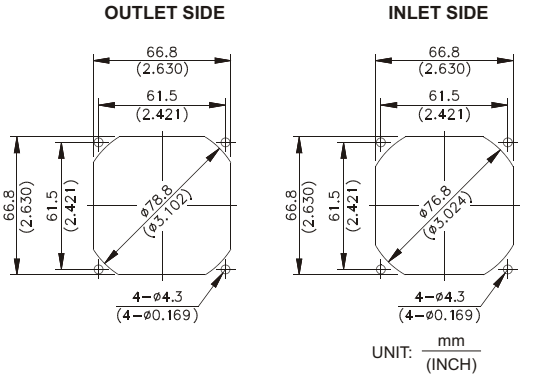

MODEL			Rated Voltage	Operating Voltage Range	Rated Current	Rated Input Power	Speed	Maximum Air Flow		Maximum Air Pressure		Noise
PART NO.	REV.	FUNCTION	VDC	VDC	Amp	Watt	R.P.M.	m^3 /min	CFM	mmH_2O	$IN\ H_2O$	dB-A
AFB0712L	-A	-R00/-F00	12	5.0 to 13.8	0.07	0.84	2300	0.599	21.16	1.99	0.078	23.0
AFB0724L	-A	-R00/-F00	24	14.0 to 26.4	0.06	1.44						
AFB0712M	-A	-R00/-F00	12	5.0 to 13.8	0.11	1.32	3100	0.817	28.85	3.55	0.140	31.5
AFB0724M	-A	-R00/-F00	24	14.0 to 26.4	0.09	2.16						
AFB0712H	-A	-R00/-F00	12	5.0 to 13.8	0.17	2.04	3900	1.028	36.30	5.52	0.217	37.5
AFB0724H	-A	-R00/-F00	24	14.0 to 26.4	0.13	3.12						
AFB0712HH	-A	-R00/-F00	12	5.0 to 13.8	0.31	3.72	4700	1.246	44.01	7.89	0.311	44.0
AFB0724HH	-A	-R00/-F00	24	14.0 to 26.4	0.18	4.32						
AFB0712VH	-A	-R00/-F00	12	5.0 to 12.6	0.44	5.28	5500	1.472	51.97	10.99	0.433	47.5
AFB0724VH	-A	-R00/-F00	24	14.0 to 26.4	0.27	6.48						
AFB0712SH	-A	-R00/-F00	12	5.0 to 13.8	0.65	7.80	6300	1.729	61.05	15.90	0.625	50.5

* Function type is optional.
* The max. air flow and the speed are measured in free air ; max. air pressure is measured at zero air flow.
* Noise is measured in anechoic chamber in free air, one meter from intake side.
* All readings are typical values at rated voltage.
* Specifications are subject to change without notice.
* "SH" for rib type only Weight:104g(3.66OZ).
* Both of the ball bearing and the 1 ball + 1 Sleeve type are available.

Downloaded from Arrow.com.

AFB 70 x 70 x 38 MM SERIES

* Bearing Type
  Ball Bearings
* Material
* Impeller & Frame : Plastic (UL94V-0)
* Lead Wires :
  UL 1007 AWG #24 OR Equivalent
  Red Wire Positive (+)
  Black Wire Negative (-)
* Weight : 133g (4.68 oz)

■ DIMENSIONS DRAWING

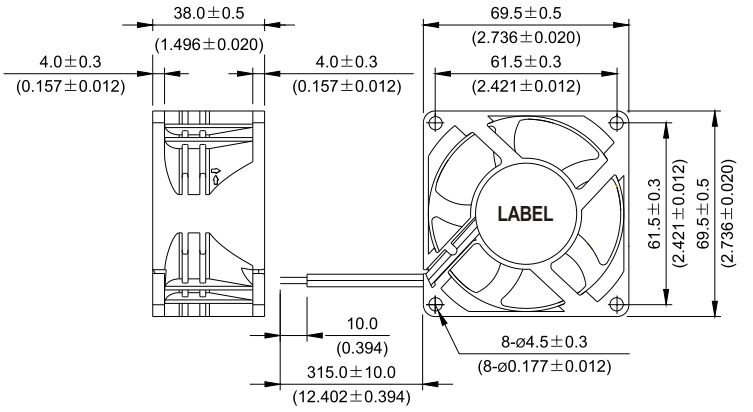

■ P & Q CURVE (AT RATED VOLTAGE)

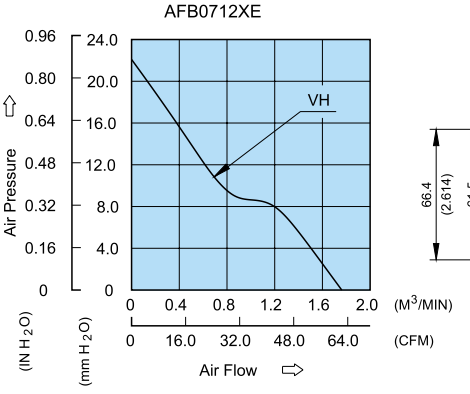

■ MOUNTING PANEL CUTOUT

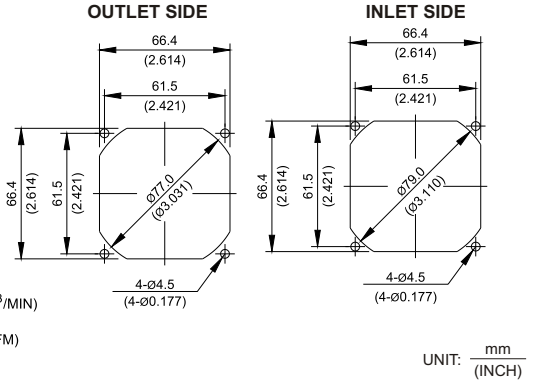

MODEL		Rated Voltage	Operating Voltage Range	Rated Current	Rated Input Power	Speed	Maximum Air Flow		Maximum Air Pressure		Noise
PART NO.	FUNCTION	VDC	VDC	Amp	Watt	R.P.M.	m^3/min	CFM	mmH_2O	IN H_2O	dB-A
AFB0712VHE	-R00 / -F00	12	7.0 to 12.6	0.70	8.40	7000	1.762	62.25	22.09	0.870	51.0

*** Function type is optional.**
*** The max. air flow and the speed are measured in free air ; max. air pressure is measured at zero air flow.**
*** Noise is measured in anechoic chamber in free air, one meter from intake side.**
*** All readings are typical values at rated voltage.**
*** Specifications are subject to change without notice.**

Downloaded from Arrow.com.

AFB 80 x 80 x 15 MM SERIES

* Bearing Type
  Ball Bearings
* Material
  Impeller & Frame : Plastic (UL 94V-0)
* Lead Wires :
  UL 1007 AWG #24 OR Equivalent
  Red Wire Positive (+)
  Black Wire Negative (-)
* Weight : 58g (2.05 oz)
* Rib Type Only

■ DIMENSIONS DRAWING

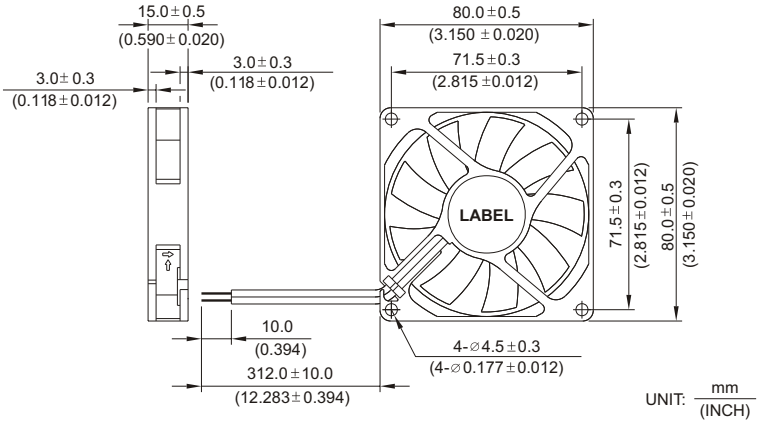

■ P & Q CURVE (AT RATED VOLTAGE)

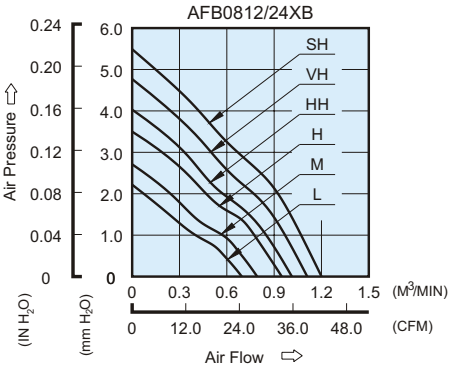

■ MOUNTING PANEL CUTOUT

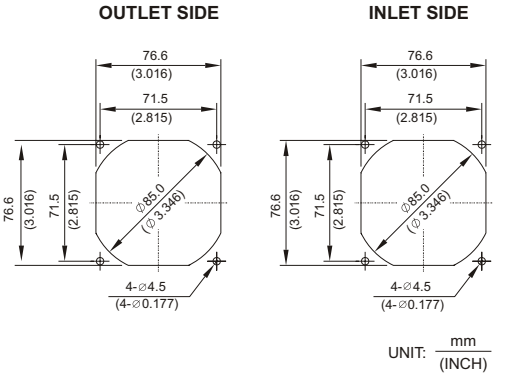

MODEL		Rated Voltage	Operating Voltage Range	Rated Current	Rated Input Power	Speed	Maximum Air Flow		Maximum Air Pressure		Noise
PART NO.	FUNCTION	VDC	VDC	Amp	Watt	R.P.M.	m^3 /min	CFM	mmH_2O	IN H_2O	dB-A
AFB0812LB	-R00 / -F00	12	7.0 to 13.8	0.09	1.08	2400	0.700	24.72	2.20	0.087	27.5
AFB0824LB	-R00 / -F00	24	14.0 to 27.6	0.05	1.20						
AFB0812MB	-R00 / -F00	12	7.0 to 13.8	0.11	1.32	2700	0.800	28.25	2.71	0.107	30.5
AFB0824MB	-R00 / -F00	24	14.0 to 27.6	0.06	1.44						
AFB0812HB	-R00 / -F00	12	7.0 to 13.8	0.14	1.68	3100	0.950	33.55	3.50	0.138	34.0
AFB0824HB	-R00 / -F00	24	14.0 to 27.6	0.08	1.92						
AFB0812HHB	-R00 / -F00	12	7.0 to 13.8	0.16	1.92	3400	1.010	35.67	4.03	0.159	37.0
AFB0824HHB	-R00 / -F00	24	14.0 to 27.6	0.10	2.40						
AFB0812VHB	-R00 / -F00	12	7.0 to 13.8	0.19	2.28	3700	1.110	39.20	4.77	0.188	39.5
AFB0824VHB	-R00 / -F00	24	14.0 to 27.6	0.12	2.88						
AFB0812SHB	-R00 / -F00	12	7.0 to 13.8	0.27	3.24	4000	1.210	42.73	5.49	0.216	42.5
AFB0824SHB	-R00 / -F00	24	14.0 to 26.0	0.17	4.08						

* Function type is optional.
* The max. air flow and the speed are measured in free air ; max. air pressure is measured at zero air flow.
* Noise is measured in anechoic chamber in free air, one meter from intake side.
* All readings are typical values at rated voltage.
* Specifications are subject to change without notice.

Downloaded from Arrow.com.

AFB 80 x 80 x 20 MM SERIES

* Bearing Type
  Ball Bearings
* Material
  Impeller & Frame : Plastic (UL 94V-0)
* Lead Wires :
  UL 1007 AWG #24 OR Equivalent
  Red Wire Positive (+)
  Black Wire Negative (-)
* Weight : 74g (2.61 oz)

■ DIMENSIONS DRAWING

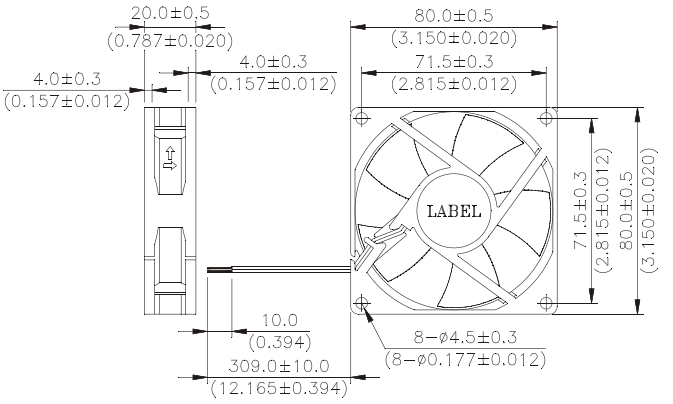

UNIT: mm / (INCH)

■ P & Q CURVE (AT RATED VOLTAGE)

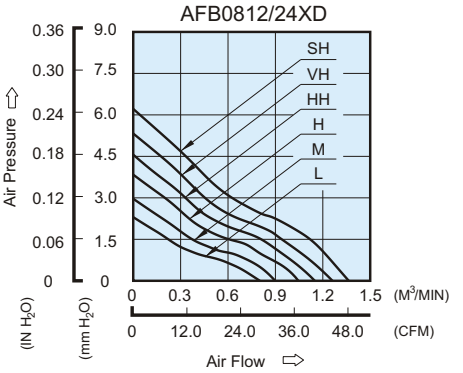

■ MOUNTING PANEL CUTOUT

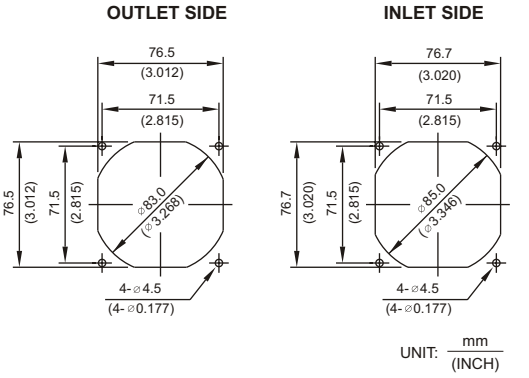

MODEL		Rated Voltage	Operating Voltage Range	Rated Current	Rated Input Power	Speed	Maximum Air Flow		Maximum Air Pressure		Noise
PART NO.	FUNCTION	VDC	VDC	Amp	Watt	R.P.M	m^3/min	CFM	mmH_2O	$IN\ H_2O$	dB-A
AFB0812LD	-R00 / -F00	12	7.0 to 13.8	0.08	0.96	2400	0.802	28.32	2.30	0.091	25.5
AFB0824LD	-R00 / -F00	24	14.0 to 27.6	0.04	0.96						
AFB0812MD	-R00 / -F00	12	7.0 to 13.8	0.10	1.20	2700	0.899	31.75	2.97	0.117	29.0
AFB0824MD	-R00 / -F00	24	14.0 to 27.6	0.05	1.20						
AFB0812HD	-R00 / -F00	12	7.0 to 13.8	0.12	1.44	3100	1.046	36.94	3.84	0.151	34.0
AFB0824HD	-R00 / -F00	24	14.0 to 27.6	0.08	1.92						
AFB0812HHD	-R00 / -F00	12	7.0 to 13.8	0.17	2.04	3400	1.150	40.61	4.56	0.180	36.0
AFB0824HHD	-R00 / -F00	24	14.0 to 27.6	0.09	2.16						
AFB0812VHD	-R00 / -F00	12	7.0 to 13.8	0.20	2.40	3700	1.262	44.57	5.33	0.210	39.0
AFB0824VHD	-R00 / -F00	24	14.0 to 27.6	0.10	2.40						
AFB0812SHD	-R00 / -F00	12	7.0 to 13.8	0.22	2.64	4000	1.365	48.20	6.22	0.245	41.0
AFB0824SHD	-R00 / -F00	24	14.0 to 27.6	0.12	2.88						

* Function type is optional.
* The max. air flow and the speed are measured in free air ; max. air pressure is measured at zero air flow.
* Noise is measured in anechoic chamber in free air, one meter from intake side.
* All readings are typical values at rated voltage.
* Specifications are subject to change without notice.

Downloaded from Arrow.com.

AFB 80 x 80 x 25.4 MM SERIES

* Bearing Type
  Ball Bearings
* Material
  Impeller & Frame : Plastic (UL 94V-0)
* Lead Wires :
  UL 1007 AWG #24 OR Equivalent
  Red Wire Positive (+)
  Black Wire Negative (-)
* Weight : 80g (2.82 oz)

■ DIMENSIONS DRAWING

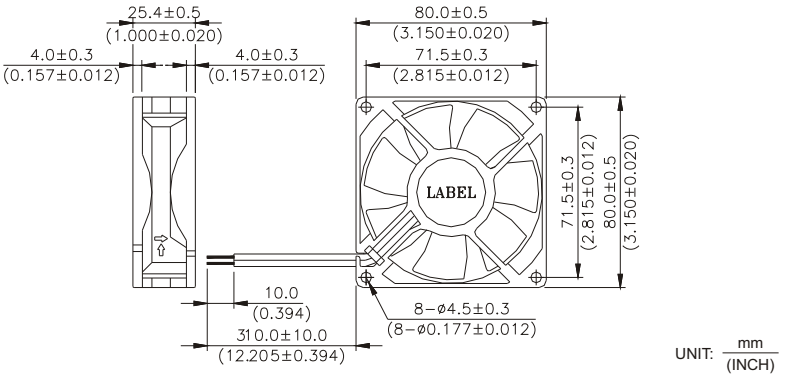

■ P & Q CURVE (AT RATED VOLTAGE)

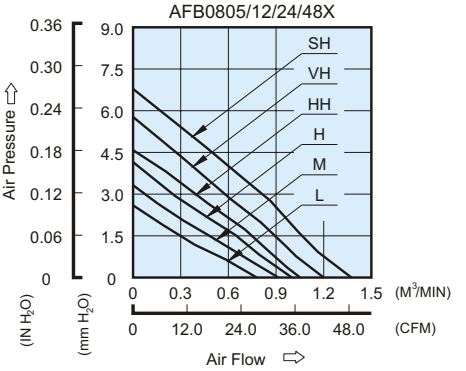

■ MOUNTING PANEL CUTOUT

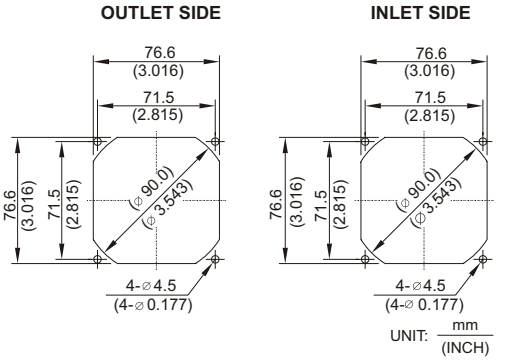

MODEL		Rated Voltage	Operating Voltage Range	Rated Current	Rated Input Power	Speed	Maximum Air Flow		Maximum Air Pressure		Noise
PART NO.	FUNCTION	VDC	VDC	Amp	Watt	R.P.M.	m^3 /min	CFM	mmH_2O	IN H_2O	dB-A
AFB0805L	/ -F00	5	4.5 to 5.5	0.24	1.20	2400	0.790	27.90	2.59	0.102	25.0
AFB0812L	-R00 / -F00	12	7.0 to 13.8	0.09	1.08						
AFB0824L	-R00 / -F00	24	14.0 to 27.6	0.05	1.20						
AFB0848L	-R00 / -F00	48	28.0 to 56.0	0.05	2.40						
AFB0805M	/ -F00	5	4.5 to 5.5	0.33	1.65	2700	0.890	31.43	3.28	0.129	28.0
AFB0812M	-R00 / -F00	12	7.0 to 13.8	0.12	1.44						
AFB0824M	-R00 / -F00	24	14.0 to 27.6	0.06	1.44						
AFB0848M	-R00 / -F00	48	28.0 to 56.0	0.06	2.88						
AFB0805H	/ -F00	5	4.5 to 5.5	0.43	2.15	3000	1.000	35.31	4.04	0.159	31.0
AFB0812H	-R00 / -F00	12	7.0 to 13.8	0.16	1.92						
AFB0824H	-R00 / -F00	24	14.0 to 27.6	0.07	1.68						
AFB0848H	-R00 / -F00	48	28.0 to 56.0	0.07	3.36						
AFB0812HH	-R00 / -F00	12	7.0 to 13.8	0.20	2.40	3250	1.060	37.43	4.59	0.181	34.0
AFB0824HH	-R00 / -F00	24	14.0 to 27.6	0.09	2.16						
AFB0848HH	-R00 / -F00	48	28.0 to 56.0	0.08	3.84						
AFB0812VH	-R00 / -F00	12	7.0 to 13.8	0.26	3.12	3600	1.190	42.02	5.51	0.217	38.0
AFB0824VH	-R00 / -F00	24	14.0 to 27.6	0.14	3.36						
AFB0812SH	-R00 / -F00	12	7.0 to 13.8	0.34	4.08	4000	1.320	46.62	6.78	0.267	40.0
AFB0824SH	-R00 / -F00	24	14.0 to 26.0	0.16	3.84						

* Function type is optional.
* The max. air flow and the speed are measured in free air ; max. air pressure is measured at zero air flow.
* Noise is measured in anechoic chamber in free air, one meter from intake side.
* All readings are typical values at rated voltage.
* Specifications are subject to change without notice.

Downloaded from Arrow.com.

AFB 92 x 92 x 15 MM SERIES

* Bearing Type
  Two Ball Bearings
* Material
  Impeller & Frame : Plastic(UL 94V-0)
* Lead Wires :
  UL 1007 AWG #24 OR Equivalent
  Red Wire Positive(+)
  Black Wire Negative(-)
* Weight : 68g (2.39 OZ)
* Rib Type Only

■ DIMENSIONS DRAWING

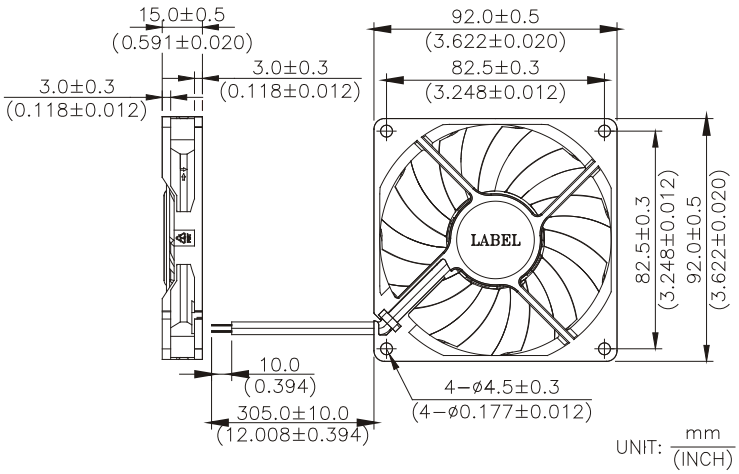

■ P & Q CURVE (AT RATED VOLTAGE)

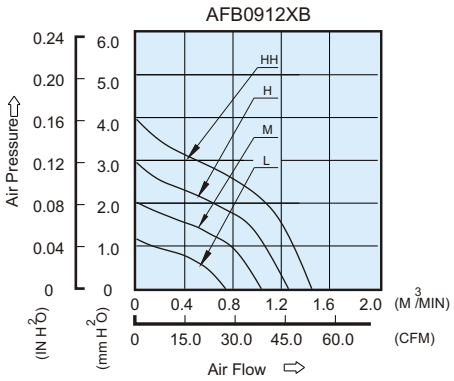

■ MOUNTING PANEL CUTOUT

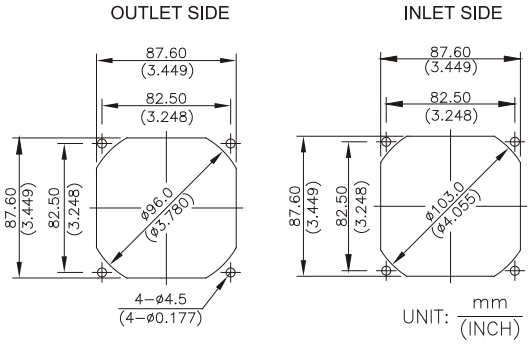

MODEL		Rated Voltage	Operating Voltage Range	Rated Current	Rated Input Power	Speed	Maximum Air Flow		Maximum Air Pressure		Noise
PART NO.	FUNCTION	VDC	VDC	Amp	Watt	R.P.M.	m^3 /min	CFM	mmH_2O	IN H_2O	dB-A
AFB0912LB	-R00 / -F00	12	5.0 to 13.8	0.10	1.20	1800	0.739	26.09	1.16	0.045	25.0
AFB0912MB	-R00 / -F00	12	5.0 to 13.8	0.13	1.56	2300	1.035	36.55	2.02	0.079	32.5
AFB0912HB	-R00 / -F00	12	5.0 to 13.8	0.21	2.52	2800	1.260	44.49	2.95	0.116	37.5
AFB0912HHB	-R00 / -F00	12	5.0 to 12.6	0.31	3.72	3300	1.453	51.53	3.96	0.156	41.5

* Function type is optional.
* The max. air flow and the speed are measured in free air ; max. air pressure is measured at zero air flow.
* Noise is measured in anechoic chamber in free air, one meter from intake side.
* All readings are typical values at rated voltage.
* Specifications are subject to change without notice.

Downloaded from Arrow.com.

AFB 92 x 92 x 20 MM SERIES

* Bearing Type
  Ball Bearings
* Material
  Impeller & Frame : Plastic (UL 94V-0)
* Lead Wires :
  UL 1007 AWG #24 OR Equivalent
  Red Wire Positive (+)
  Black Wire Negative (-)
* Weight : 92g (3.24 oz)

■ DIMENSIONS DRAWING

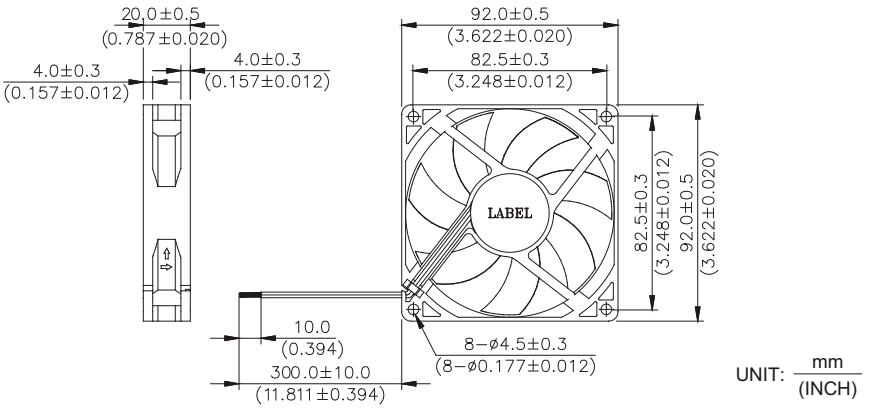

■ P & Q CURVE (AT RATED VOLTAGE)

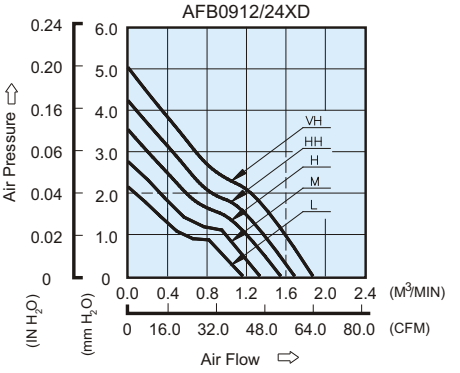

■ MOUNTING PANEL CUTOUT

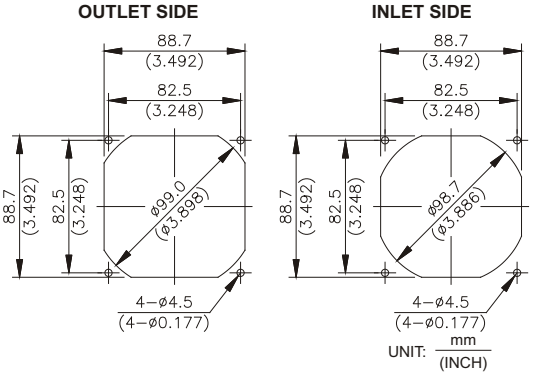

MODEL		Rated Voltage	Operating Voltage Range	Rated Current	Rated Input Power	Speed	Maximum Air Flow		Maximum Air Pressure		Noise
PART NO.	FUNCTION	VDC	VDC	Amp	Watt	R.P.M.	m^3 /min	CFM	mmH_2O	IN H_2O	dB-A
AFB0912LD	-R00 / -F00	12	7.0 to 13.8	0.08	0.96	2100	1.161	41.00	2.13	0.084	28.5
AFB0924LD	-R00 / -F00	24	14.0 to 27.6	0.06	1.44						
AFB0912MD	-R00 / -F00	12	7.0 to 13.8	0.10	1.20	2400	1.335	47.14	2.74	0.108	32.0
AFB0924MD	-R00 / -F00	24	14.0 to 27.6	0.08	1.92						
AFB0912HD	-R00 / -F00	12	7.0 to 13.8	0.16	1.92	2700	1.546	54.60	3.51	0.138	35.0
AFB0924HD	-R00 / -F00	24	14.0 to 27.6	0.10	2.40						
AFB0912HHD	-R00 / -F00	12	7.0 to 13.8	0.24	2.88	3000	1.686	59.54	4.22	0.166	38.0
AFB0924HHD	-R00 / -F00	24	14.0 to 27.6	0.13	3.12						
AFB0912VHD	-R00 / -F00	12	7.0 to 13.8	0.28	3.36	3300	1.872	66.11	5.03	0.198	40.5
AFB0924VHD	-R00 / -F00	24	14.0 to 27.6	0.16	3.84						

* Function type is optional.
* The max. air flow and the speed are measured in free air ; max. air pressure is measured at zero air flow.
* Noise is measured in anechoic chamber in free air, one meter from intake side.
* All readings are typical values at rated voltage.
* Specifications are subject to change without notice.

Downloaded from Arrow.com.

AFB 92 x 92 x 25.4 MM SERIES

* Bearing Type
  Ball Bearings
* Material
  Impeller & Frame : Plastic (UL 94V-0)
* Lead Wires :
  UL 1007 AWG #24 OR Equivalent
  Red Wire Positive (+)
  Black Wire Negative (-)
* Weight : 99g (3.49 oz)

■ DIMENSIONS DRAWING

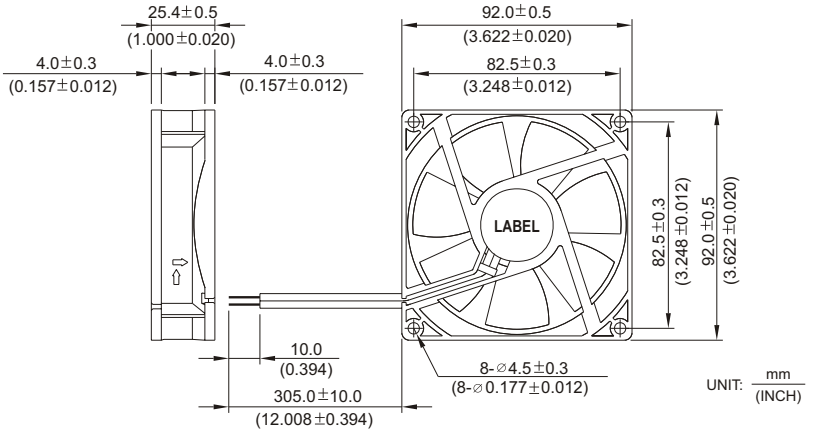

■ P & Q CURVE (AT RATED VOLTAGE)

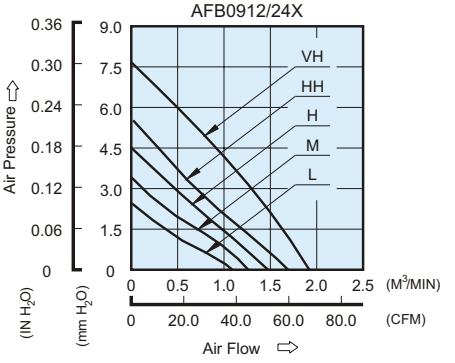

■ MOUNTING PANEL CUTOUT

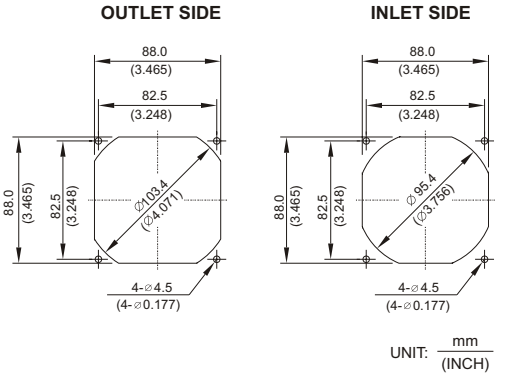

MODEL		Rated Voltage	Operating Voltage Range	Rated Current	Rated Input Power	Speed	Maximum Air Flow		Maximum Air Pressure		Noise
PART NO.	FUNCTION	VDC	VDC	Amp	Watt	R.P.M.	m^3 /min	CFM	mmH_2O	IN H_2O	dB-A
AFB0912L	-R00 / -F00	12	7.0 to 13.8	0.07	0.84	2100	1.050	37.08	2.53	0.100	25.0
AFB0924L	-R00 / -F00	24	14.0 to 27.6	0.06	1.44						
AFB0948L	-R00 / -F00	48	28.0 to 56.0	0.05	2.40						
AFB0912M	-R00 / -F00	12	7.0 to 13.8	0.11	1.32	2450	1.240	43.79	3.25	0.130	30.0
AFB0924M	-R00 / -F00	24	14.0 to 27.6	0.08	1.92						
AFB0948M	-R00 / -F00	48	28.0 to 56.0	0.05	2.40						
AFB0912H	-R00 / -F00	12	7.0 to 13.8	0.16	1.92	2850	1.450	51.21	4.50	0.177	34.0
AFB0924H	-R00 / -F00	24	14.0 to 27.6	0.10	2.40						
AFB0948H	-R00 / -F00	48	28.0 to 56.0	0.06	2.88						
AFB0912HH	-R00 / -F00	12	7.0 to 13.8	0.25	3.00	3200	1.640	57.92	5.62	0.221	38.0
AFB0924HH	-R00 / -F00	24	14.0 to 27.6	0.13	3.12						
AFB0948HH	-R00 / -F00	48	28.0 to 56.0	0.08	3.84						
AFB0912VH	-R00 / -F00	12	7.0 to 13.8	0.40	4.80	3800	1.920	67.80	7.67	0.302	45.0
AFB0924VH	-R00 / -F00	24	14.0 to 27.6	0.22	5.28						

* Function type is optional.
* The max. air flow and the speed are measured in free air ; max. air pressure is measured at zero air flow.
* Noise is measured in anechoic chamber in free air, one meter from intake side.
* All readings are typical values at rated voltage.
* Specifications are subject to change without notice.

Downloaded from Arrow.com.

AFB 92 x 92 x 38 MM SERIES

New

* Bearing Type
  Ball Bearings
  Material
  Impeller & Frame : Plastic (UL94V-0)
* Lead Wires :
  UL 1007 AWG#24 OR Equivalent
  Red Wire Positive (+)
  Black Wire Negative (-)
* Weight : 245g (8.64 oz)

■ DIMENSIONS DRAWING

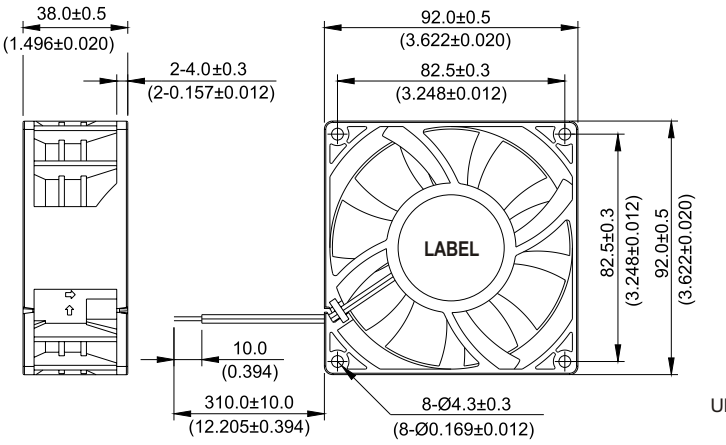

■ P & Q CURVE (AT RATED VOLTAGE)

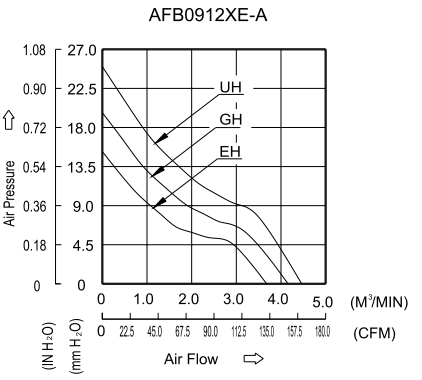

■ MOUNTING PANEL CUTOUT

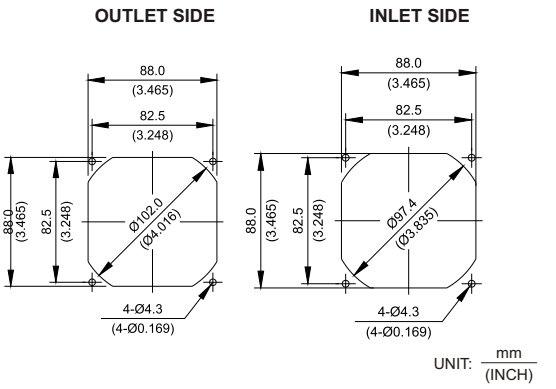

MODEL			Rated Voltage	Operating Voltage Range	Rated Current	Rated Input Power	Speed	Maximum Air Flow		Maximum Air Pressure		Noise
PART NO.	REV.	FUNCTION	VDC	VDC	Amp	Watt	R.P.M.	m^3 /min	CFM	mmH_2O	IN H_2O	dB-A
AFB0912EHE	-A	-R00 / -F00	12	7.0 to 13.8	1.40	16.80	4800	3.605	127.31	16.13	0.635	56.0
AFB0912GHE	-A	-R00 / -F00	12	7.0 to 13.8	1.85	22.20	5400	4.074	143.87	20.37	0.802	60.0
AFB0912UHE	-A	-R00 / -F00	12	7.0 to 13.2	2.50	30.00	6000	4.537	160.22	25.45	1.002	63.0

* Function type is optional.
* The max. air flow and the speed are measured in free air ; max. air pressure is measured at zero air flow.
* Noise is measured in anechoic chamber in free air, one meter from intake side.
* All readings are typical values at rated voltage.
* Specifications are subject to change without notice.

Downloaded from Arrow.com.

AFB 120 x 120 x 25.4 MM SERIES

* Bearing Type
  Ball Bearings
* Material
  Impeller & Frame : Plastic (UL 94V-0)
* Lead Wires :
  UL 1007 AWG #24 OR Equivalent
  Red Wire Positive (+)
  Black Wire Negative (-)
* Weight : 198g (6.98 oz)

DIMENSIONS DRAWING

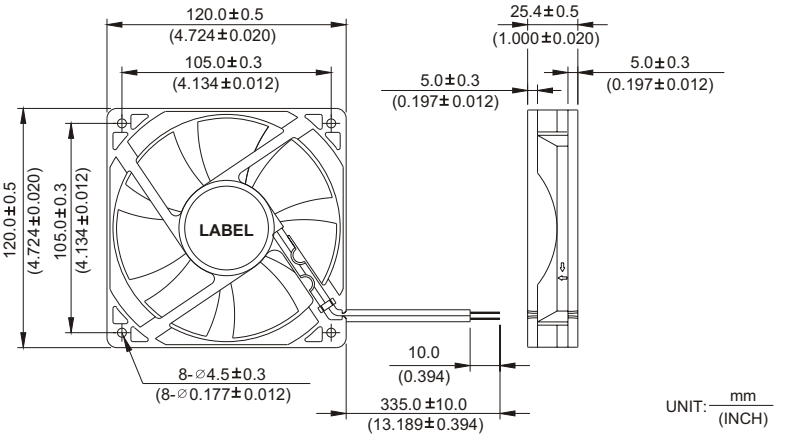

P & Q CURVE (AT RATED VOLTAGE)

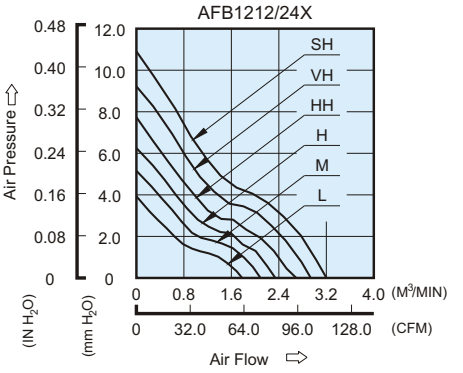

MOUNTING PANEL CUTOUT

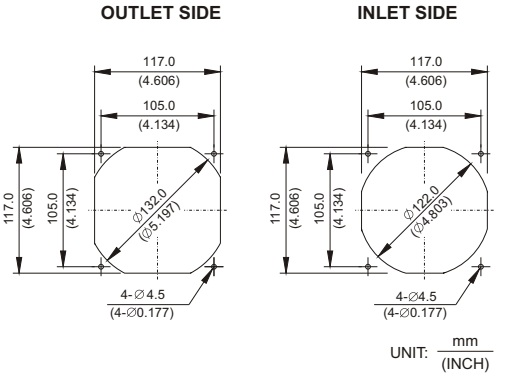

MODEL		Rated Voltage	Operating Voltage Range	Rated Current	Rated Input Power	Speed	Maximum Air Flow		Maximum Air Pressure		Noise
PART NO.	FUNCTION	VDC	VDC	Amp	Watt	R.P.M.	m^3 /min	CFM	mmH_2O	IN H_2O	dB-A
AFB1212L	-R00 / -F00	12	7.0 to 13.8	0.14	1.68	1900	1.782	62.93	3.93	0.154	32.5
AFB1224L	-R00 / -F00	24	14.0 to 27.6	0.09	2.16						
AFB1212M	-R00 / -F00	12	7.0 to 13.8	0.18	2.16	2200	2.091	73.84	5.15	0.203	35.5
AFB1224M	-R00 / -F00	24	14.0 to 27.6	0.12	2.88						
AFB1212H	-R00 / -F00	12	7.0 to 13.8	0.23	2.76	2500	2.341	82.67	6.25	0.246	38.5
AFB1224H	-R00 / -F00	24	14.0 to 27.6	0.14	3.36						
AFB1212HH	-R00 / -F00	12	7.0 to 13.8	0.33	3.96	2800	2.694	95.14	7.73	0.304	41.5
AFB1224HH	-R00 / -F00	24	14.0 to 27.6	0.18	4.32						
AFB1212VH	-R00 / -F00	12	7.0 to 13.8	0.40	4.80	3100	2.938	103.75	9.43	0.371	44.5
AFB1224VH	-R00 / -F00	24	14.0 to 27.6	0.23	5.52						
AFB1212SH	-R00 / -F00	12	7.0 to 13.8	0.53	6.36	3400	3.203	113.11	10.92	0.430	46.5
AFB1224SH	-R00 / -F00	24	14.0 to 27.6	0.28	6.72						

* Function type is optional.
* The max. air flow and the speed are measured in free air ; max. air pressure is measured at zero air flow.
* Noise is measured in anechoic chamber in free air, one meter from intake side.
* All readings are typical values at rated voltage.
* Specifications are subject to change without notice.

Downloaded from Arrow.com.

AFB 120 x 120 x 38 MM SERIES

* Bearing Type
  Ball Bearings
* Material
  Impeller & Frame : Plastic (UL 94V-0)
* Lead Wires :
  UL 1007 AWG #24 OR Equivalent
  Red Wire Positive (+)
  Black Wire Negative (-)
* Weight : 256g (9.03 oz)

DIMENSIONS DRAWING

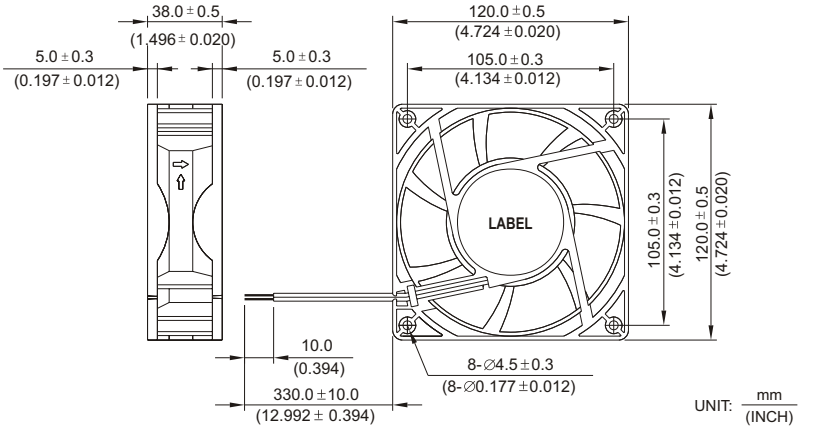

P & Q CURVE (AT RATED VOLTAGE)

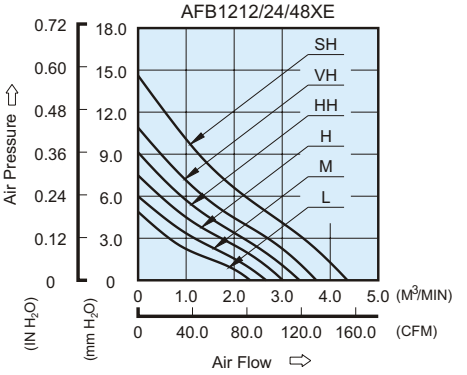

MOUNTING PANEL CUTOUT

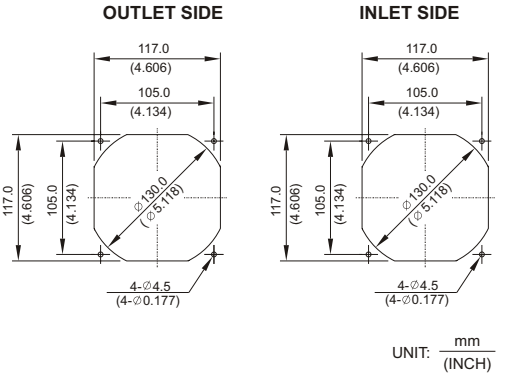

MODEL		Rated Voltage	Operating Voltage Range	Rated Current	Rated Input Power	Speed	Maximum Air Flow		Maximum Air Pressure		Noise
PART NO.	FUNCTION	VDC	VDC	Amp	Watt	R.P.M.	m^3 /min	CFM	mmH_2O	$IN\ H_2O$	dB-A
AFB1212LE	-R00 / -F00	12	4.0 to 13.2	0.19	2.28	2000	2.400	84.76	4.56	0.180	34.0
AFB1224LE	-R00 / -F00	24	7.0 to 27.6	0.15	3.60						
AFB1248LE	-R00 / -F00	48	28.0 to 56.0	0.06	2.88						
AFB1212ME	-R00 / -F00	12	4.0 to 13.2	0.26	3.12	2300	2.690	95.00	6.00	0.236	38.0
AFB1224ME	-R00 / -F00	24	7.0 to 27.6	0.19	4.56						
AFB1248ME	-R00 / -F00	48	28.0 to 56.0	0.08	3.84						
AFB1212HE	-R00 / -F00	12	4.0 to 13.2	0.32	3.84	2600	3.000	105.94	7.60	0.300	41.0
AFB1224HE	-R00 / -F00	24	7.0 to 27.6	0.24	5.76						
AFB1248HE	-R00 / -F00	48	28.0 to 56.0	0.12	5.76						
AFB1212HHE	-R00 / -F00	12	4.0 to 13.2	0.46	5.52	2900	3.400	120.07	9.00	0.354	44.0
AFB1224HHE	-R00 / -F00	24	7.0 to 27.6	0.30	7.20						
AFB1248HHE	-R00 / -F00	48	28.0 to 56.0	0.15	7.20						
AFB1212VHE	-R00 / -F00	12	4.0 to 13.2	0.60	7.20	3200	3.680	129.96	10.70	0.420	48.0
AFB1224VHE	-R00 / -F00	24	7.0 to 27.6	0.38	9.12						
AFB1248VHE	-R00 / -F00	48	28.0 to 56.0	0.18	8.64						
AFB1212SHE	-R00 / -F00	12	4.0 to 13.2	1.05	12.60	3700	4.300	151.85	14.50	0.571	53.0
AFB1224SHE	-R00 / -F00	24	7.0 to 27.6	0.50	12.00						

* Function type is optional.
* The max. air flow and the speed are measured in free air ; max. air pressure is measured at zero air flow.
* Noise is measured in anechoic chamber in free air, one meter from intake side.
* All readings are typical values at rated voltage.
* Specifications are subject to change without notice.

Downloaded from Arrow.com.

AFB 172 x 150 x 25.4 MM SERIES

New

* Bearing Type
  Ball Bearings
* Material
  Impeller : Plastic (UL 94V-0)
  Frame : Die-Cast Aluminum
* Lead Wires :
  UL 1007 AWG#24 OR Equivalent
  Red Wire Positive (+)
  Black Wire Negative (-)
* Weight : 430g (15.17 oz)

DIMENSIONS DRAWING

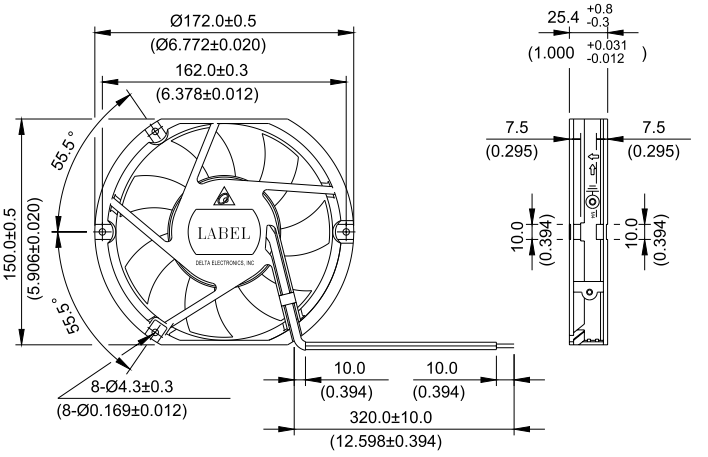

UNIT: mm (INCH)

P & Q CURVE (AT RATED VOLTAGE)

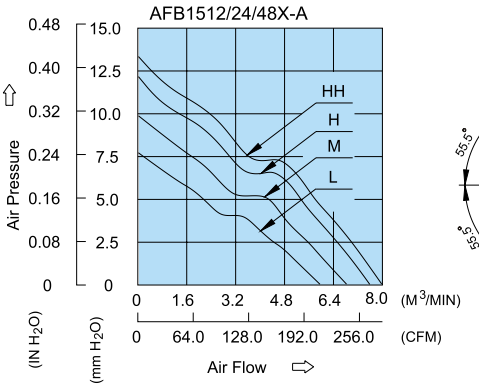

MOUNTING PANEL CUTOUT

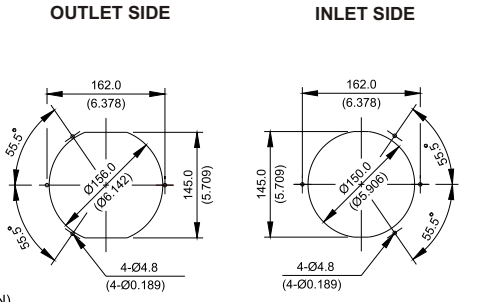

UNIT: mm (INCH)

MODEL			Rated Voltage	Operating Voltage Range	Rated Current	Rated Input Power	Speed	Maximum Air Flow		Maximum Air Pressure		Noise
PART NO.	REV	FUNCTION	VDC	VDC	Amp	Watt	R.P.M.	m^3/min	CFM	mmH_2O	IN H_2O	dB-A
AFB1512L	-A	-R00 / -F00	12	6.0 to 14.0	0.56	6.72	2400	4.553	160.77	7.75	0.305	46.0
AFB1524L	-A	-R00 / -F00	24	12.0 to 30.0	0.31	7.44						
AFB1548L	-A	-R00 / -F00	48	24.0 to 60.0	0.17	8.16						
AFB1512M	-A	-R00 / -F00	12	6.0 to 14.0	0.76	9.12	2700	5.134	181.32	9.70	0.382	49.0
AFB1524M	-A	-R00 / -F00	24	12.0 to 30.0	0.40	9.60						
AFB1548M	-A	-R00 / -F00	48	24.0 to 60.0	0.22	10.56						
AFB1512H	-A	-R00 / -F00	12	6.0 to 14.0	0.98	11.76	3000	5.735	202.54	11.85	0.467	52.0
AFB1524H	-A	-R00 / -F00	24	12.0 to 30.0	0.50	12.00						
AFB1548H	-A	-R00 / -F00	48	24.0 to 60.0	0.27	12.96						
AFB1512HH	-A	-R00 / -F00	12	6.0 to 14.0	1.17	14.04	3200	6.084	214.85	13.30	0.524	53.5
AFB1524HH	-A	-R00 / -F00	24	12.0 to 30.0	0.62	14.88						
AFB1548HH	-A	-R00 / -F00	48	24.0 to 60.0	0.31	14.88						

* Function type is optional.
* The max. air flow and the speed are measured in free air ; max. air pressure is measured at zero air flow.
* Noise is measured in anechoic chamber in free air, one meter from intake side.
* All readings are typical values at rated voltage.
* Specifications are subject to change without notice.

Downloaded from Arrow.com.

AFB Ø 172 x 25.4 MM SERIES

New

* Bearing Type
  Ball Bearings
* Material
  Impeller : Plastic (UL 94V-0)
  Frame : Die-Cast Aluminum
* Lead Wires :
  UL 1007 AWG#24 OR Equivalent
  Red Wire Positive (+)
  Black Wire Negative (-)
* Weight : 450g (15.87 oz)

DIMENSIONS DRAWING

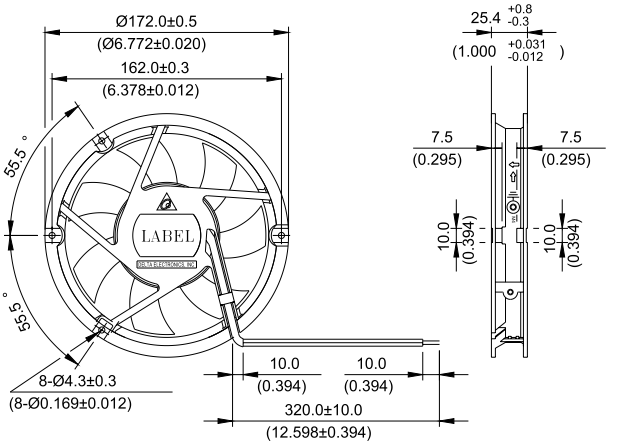

UNIT: mm (INCH)

P & Q CURVE (AT RATED VOLTAGE)

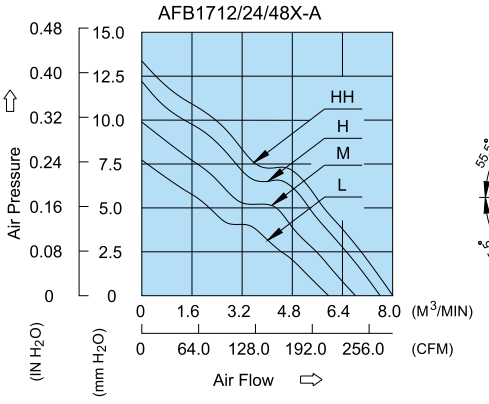

MOUNTING PANEL CUTOUT

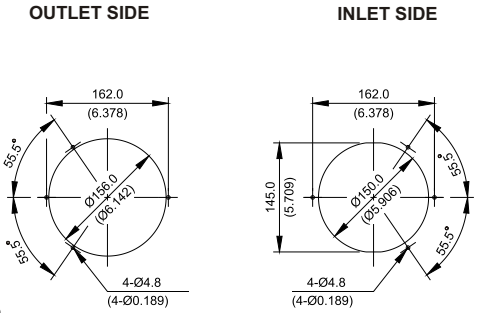

UNIT: mm (INCH)

MODEL			Rated Voltage	Operating Voltage Range	Rated Current	Rated Input Power	Speed	Maximum Air Flow		Maximum Air Pressure		Noise
PART NO.	REV	FUNCTION	VDC	VDC	Amp	Watt	R.P.M.	m³/min	CFM	mmH₂O	IN H₂O	dB-A
AFB1712L	-A	-R00 / -F00	12	6.0 to 14.0	0.56	6.72	2400	4.553	160.77	7.75	0.305	46.0
AFB1724L	-A	-R00 / -F00	24	12.0 to 30.0	0.31	7.44						
AFB1748L	-A	-R00 / -F00	48	24.0 to 60.0	0.17	8.16						
AFB1712M	-A	-R00 / -F00	12	6.0 to 14.0	0.76	9.12	2700	5.134	181.32	9.70	0.382	49.0
AFB1724M	-A	-R00 / -F00	24	12.0 to 30.0	0.40	9.60						
AFB1748M	-A	-R00 / -F00	48	24.0 to 60.0	0.22	10.56						
AFB1712H	-A	-R00 / -F00	12	6.0 to 14.0	0.98	11.76	3000	5.735	202.54	11.85	0.467	52.0
AFB1724H	-A	-R00 / -F00	24	12.0 to 30.0	0.50	12.00						
AFB1748H	-A	-R00 / -F00	48	24.0 to 60.0	0.27	12.96						
AFB1712HH	-A	-R00 / -F00	12	6.0 to 14.0	1.17	14.04	3200	6.084	214.85	13.30	0.524	53.5
AFB1724HH	-A	-R00 / -F00	24	12.0 to 30.0	0.62	14.88						
AFB1748HH	-A	-R00 / -F00	48	24.0 to 60.0	0.31	14.88						

* Function type is optional.
* The max. air flow and the speed are measured in free air ; max. air pressure is measured at zero air flow.
* Noise is measured in anechoic chamber in free air, one meter from intake side.
* All readings are typical values at rated voltage.
* Specifications are subject to change without notice.

Downloaded from Arrow.com.