1.15.108.572/0100

LUMOTAST 75 IP40, keylock switch, rectangular collar, 2 NC + 2 NO, Silver, Solder terminal, 90°, latching, key removal position 0

Description

The LUMOTAST 75 key-operated switches have proven themselves over decades. The familiar connection concept makes the LUMOTAST 75 series your reliable component. Illuminated pushbuttons and signal lamps are also available to match the design. The basic version of the LUMOTAST 75 offers protection class IP 40 according to DIN.

technical data

general

Collar color	black
Collar shape	rectangular
Operating temperature, min.	-25 °C
Operating temperature, max.	70 °C
Storage temperature, min.	-40 °C
Storage temperature, max.	80 °C
illuminated	No
Packaging	Box
Packaging unit	2 pcs.
Net weight	33 g
Operating life	50,000 cycles
B10	65,000 cycles
Degree of protection, front side, according to DIN EN 60529	IP40
Minimum order quantity (MOQ)	10 pcs.
RoHS compliant	Yes
REACH compliant	Yes
Country of origin	HU

mounting diameters

Outside dimension, length	18 mm
Outside dimension, width	24 mm
Outside dimension, height	57 mm
Mounting hole	16.2 mm
Mounting depth	49.5 mm
Installation height	7.5 mm

mechanical data

Key removal position	0
Terminal on the rear	Solder terminal
Number of locking positions	45
Fixing	Threaded ring
Actuation function	latching

direct links

- RAFI eCatalog

The information in this data sheet only contains general descriptions and / or performance features, which may not apply precisely as described to the respective application, and which my change due to further product enhancements. The technical data, illustrations and other information about our products are the mere results of individual technical testing. These descriptions and other product features are only binding if they expressly agreed upon at the time of the conclusion of a binding contract. In all other cases, we reserve the right to make technical changes as well as changes of availability. Pictures and other graphic illustrations are approximations only. All product names may be trademarks or brand names of the RAFI Group or any other sub-supplier of RAFI. The use of such by any third parties for their own purposes may infringe the rights of the respective entity holding those rights.

RAFI GmbH & Co. KG

Ravensburger Str. 128-134
88276 Berg / Ravensburg
Germany
www.rafi-group.com,
info.headquarters@rafi-group.com

Downloaded from Arrow.com.

Rotating angle	90°
Contact function	2 NC + 2 NO
Contact system	Bridge-snap-action contact
Contact material	Silver
Solderability	Yes
Locking	45

electrical data

Rated voltage, min.	12 V
Rated voltage, max.	230 V
Rated current, min.	0.05 A
Rated current, max.	4 A

The information in this data sheet only contains general descriptions and / or performance features, which may not apply precisely as described to the respective application, and which my change due to further product enhancements. The technical data, illustrations and other information about our products are the mere results of individual technical testing. These descriptions and other product features are only binding if they expressly agreed upon at the time of the conclusion of a binding contract. In all other cases, we reserve the right to make technical changes as well as changes of availability. Pictures and other graphic illustrations are approximations only. All product names may be trademarks or brand names of the RAFI Group or any other sub-supplier of RAFI. The use of such by any third parties for their own purposes may infringe the rights of the respective entity holding those rights.

RAFI GmbH & Co. KG

Ravensburger Str. 128-134
88276 Berg / Ravensburg
Germany
www.rafi-group.com,
info.headquarters@rafi-group.com

Downloaded from Arrow.com.

drawings

Dimensioned drawing

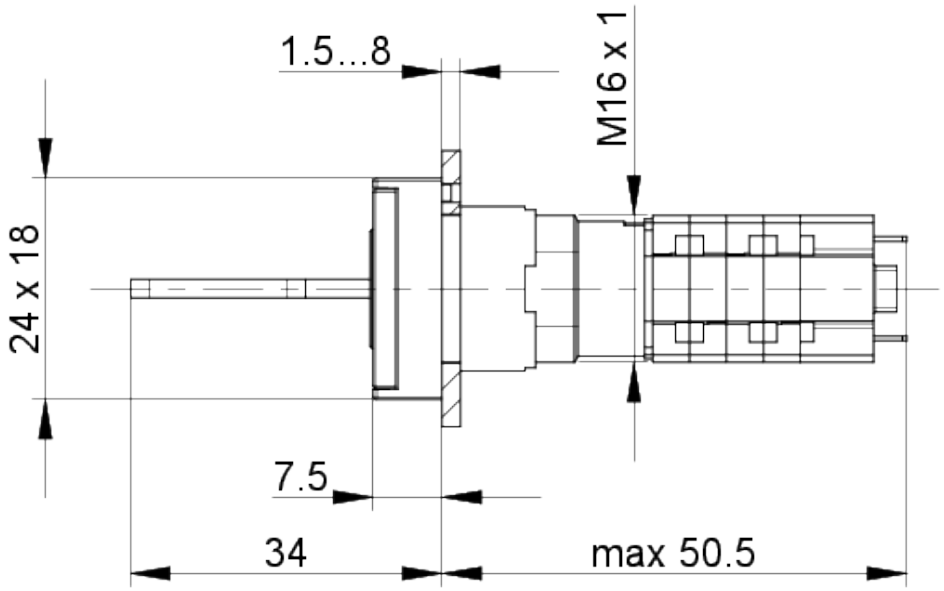

Mounting hole drawing

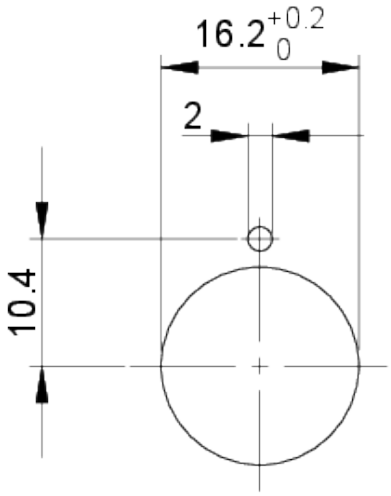

The information in this data sheet only contains general descriptions and / or performance features, which may not apply precisely as described to the respective application, and which my change due to further product enhancements. The technical data, illustrations and other information about our products are the mere results of individual technical testing. These descriptions and other product features are only binding if they expressly agreed upon at the time of the conclusion of a binding contract. In all other cases, we reserve the right to make technical changes as well as changes of availability. Pictures and other graphic illustrations are approximations only. All product names may be trademarks or brand names of the RAFI Group or any other sub-supplier of RAFI. The use of such by any third parties for their own purposes may infringe the rights of the respective entity holding those rights.

RAFI GmbH & Co. KG

Ravensburger Str. 128-134
88276 Berg / Ravensburg
Germany
www.rafi-group.com,
info.headquarters@rafi-group.com

Downloaded from Arrow.com.