MICRO SWITCH
a Honeywell Division
FED. MFG. CODE 91929

SWITCH–ENCLOSED

CATALOG LISTING
602HE5–RB1

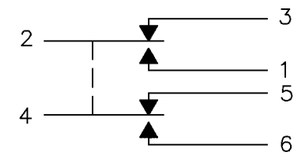

CIRCUIT DIAGRAM

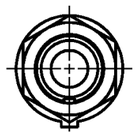

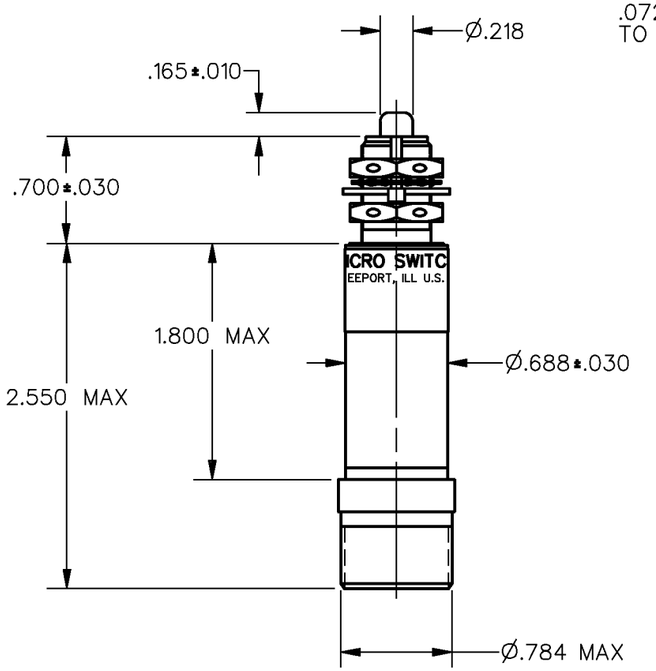

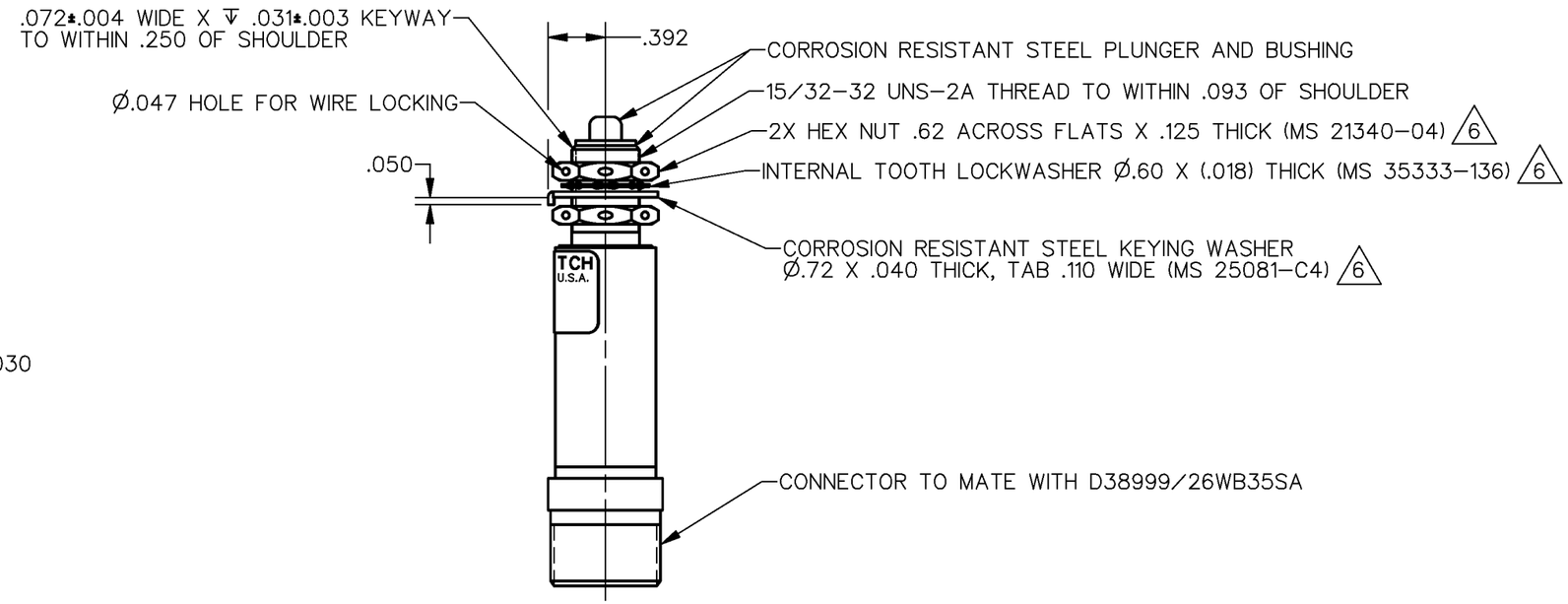

NOTES
1 – CORROSION RESISTANT STEEL ENCLOSURE
2 – SWITCH SEALED PER MIL–S–8805 SYMBOL 5 ($1X10^{-8}$ ATM CM^3/S)
3 – COINCIDENCE OF OPERATING AND RELEASING POINTS:
.010 INCH OF PLUNGER TRAVEL
4 – CIRCUIT DIAGRAM AND CATALOG LISTING ARE SHOWN ON NAMEPLATE
5 – FOR OPERATION IN TEMPERATURE RANGE OF –65° F (–55° C) TO +257° F (+125° C)
6 HARDWARE MAY BE PACKAGED UNASSEMBLED PER MIL–S–8805
7 WEIGHT OF MOUNTING HARDWARE NOT INCLUDED. MOUNTING HARDWARE WEIGHT EQUALS .3 OZ MAX
8 – MECHANICAL LIFE – 50,000 OPERATIONS REFERENCE
ELECTRICAL LIFE – 25,000 OPERATIONS REFERENCE
9 – DIELECTRIC STRENGTH: OPEN CIRCUIT TERMINALS – 800 VRMS
TERMINAL TO CASE – 1000 VRMS

THIS DRAWING COVERS A PROPRIETARY ITEM AND IS THE PROPERTY OF MICRO SWITCH. A DIVISION OF HONEYWELL. THIS DRAWING IS NOT TO BE COPIED OR USED WITHOUT THE APPROVAL OF MICRO SWITCH

THIRD ANGLE PROJECTION

SCALE FULL

DO NOT SCALE PRINT

CHARACTERISTICS

OPERATING FORCE — — — — 10 LB MAX
RELEASE FORCE — — — — — 1 LB MIN
PRETRAVEL — — — — — — .020–.030
DIFFERENTIAL TRAVEL — — — .020 MAX
OVERTRAVEL — — — — — — .125 MIN
FULL OVERTRAVEL FORCE — — — 30 LB MAX

ELECTRICAL DATA

CONTACT ARRANGEMENT
2X S P D T

LOAD	28 VDC	
	SEA LEVEL	70,000 FT
RES	4	4
IND	1	1
LAMP	2	2

UNLESS OTHERWISE SPECIFIED TOLERANCES ARE

ONE PLACE	(.0)	±.030
TWO PLACE	(.00)	±.015
THREE PLACE	(.000)	±.005
ANGLES		±

WEIGHT 3.0 OZ MAX 7

ANSI Y14.5M–1982 APPLIES

CATALOG LISTING 602HE5–RB1
PAGE 1 OF 1
ISSUE M 2
REPLACES
RELEASE NO. PR–21990
CHECK
REVISIONS
A PR–21990 K D R 6 FEB 96
DDM/CAD
DRAWN K D R 6 FEB 96

Downloaded from Arrow.com.