Alle Rechte vorbehalten/ *All rights reserved*

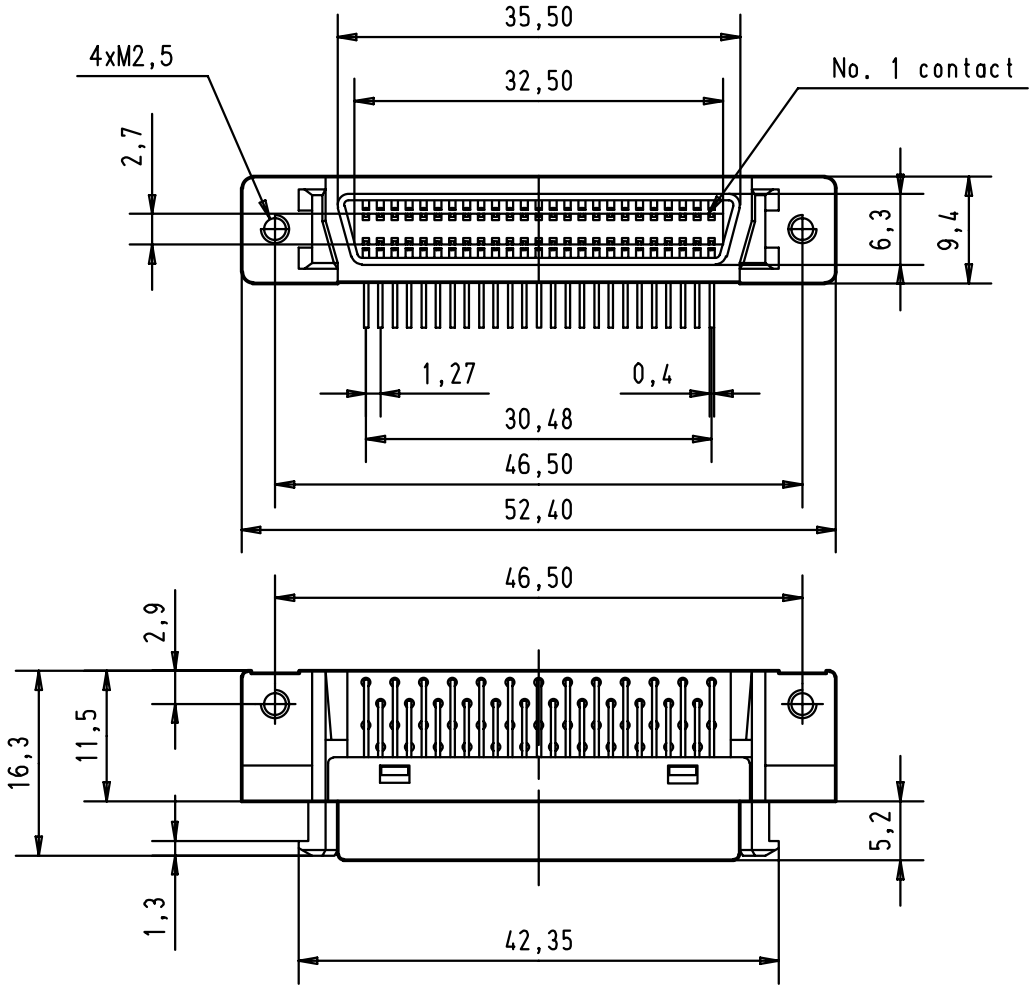

Printed Board Layout
component side

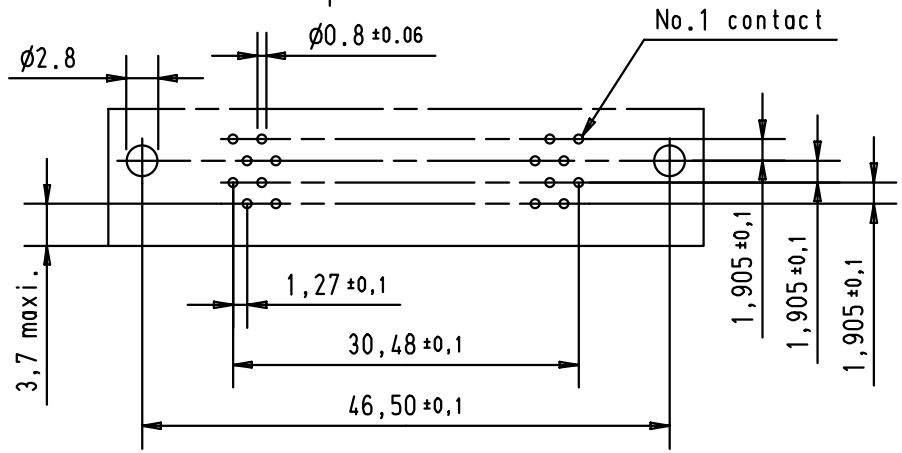

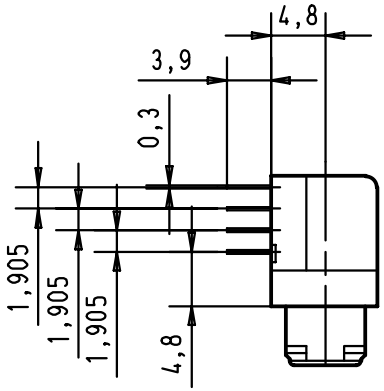

				Dat.	Name		har.mik® I/O bellow	Maßstab/ Scale
			Detail.	30-AUG-00	Alspace	All Dim. in mm Orig. Size DIN A 4	50 poles female connector with angled solder pins and fixed latching	1,5:1
			Insp.					
			Stand.					
27941	30-AUG-00	Alspace	HARTING EURL F-95972 Paris				TB 60 11 050 5132	Blatt/Page 1/1
Mod.	Dat.	Name					Sub.	

Downloaded from Arrow.com.