Type: **011420098** External dimensions: **140 x 200 x 91 mm** Weight: **1760 g**

DIN rail length in mm	max. fitting length in mm	Earthing rail clamp	Mounting plate (thickness in mm)	External mounting brackets	External hinge* set	EMC version	Internal hinge* set	SWB / SBG / SBGL Corr.protection	Allen lid screws	Silicone lid seal	Sealable lid screws in steel	Turn bolt fastener
TS 35												
186	160	11	1,5	•	•	•		•	•	•	•	•

Lid

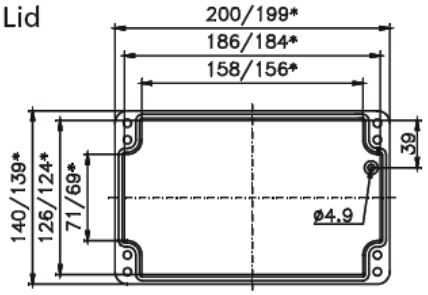

* = Conical form tapering downwards
Free dimensions-tolerance to GTA 13/5 DIN 1688

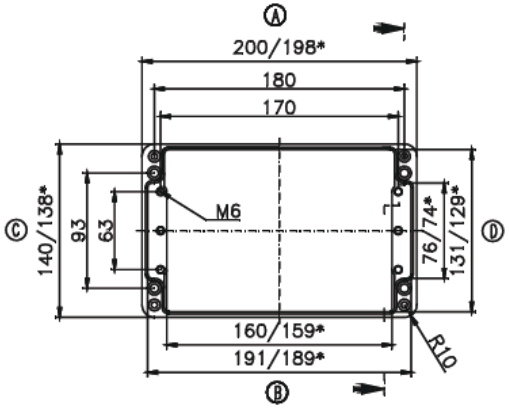

Base

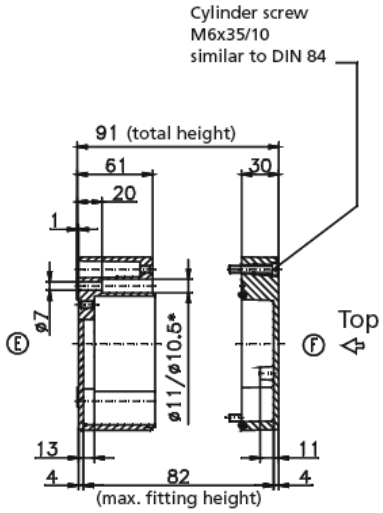

Maximum number of cable glands to **DIN 50262***

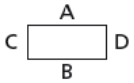

M	Corner dim.	Side A/B	Side C/D	PG	Corner dim.	Side A/B	Side C/D
12	17,25	28	12	7	17,25	28	12
16	25,30	12	6	9	21,85	20	6
20	27,60	12	5	11	25,30	12	6
25	37,95	5	2	13,5	27,60	12	4
32	48,30	3	1	16	31,05	10	3
40	60,95			21	37,95	5	2
50	69,00			29	48,30	3	1
63	74,75			36	60,95		
				42	69,00		
				48	74,75		

DATE 17 MAY 2017	7330 Executive Way Frederick, MD 21704 (301) 696-9411 voice (301) 696-9494 fax	ROSE
SHEET 1		
DESCRIPTION	ENCLOSURE, STANDARD, ALUMINUM 140 X 200 X 91MM, UNPAINTED	
SIZE A	DRAWING NUMBER 011420098	REV -

Downloaded from Arrow.com.