Product Specifications

Electrical Specifications

Voltage Rating: 250VAC/DC
Operating Temperature: -55°C ~ 125°C

Standards

250mA-16A
File E197390
Tested to IEC 60127 standards

Interrupting Rating

10kA; 1500A @250VAC (250mA-6.3A)
1500A @250VAC (8A-16A)
1000A @250VDC (250mA-6.3A)
1000A @250VDC (8A-16A)

Material Specifications

Body Material: Ceramic

Mechanical Dimensions: Inches [mm]

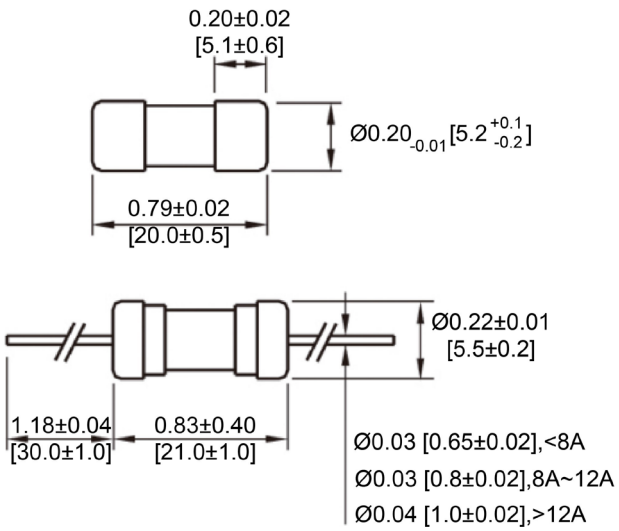

Part Numbers Information

Cartridge P/N	Axial Lead P/N	Ampere Rating	I^2T Reference (A^2 Sec)	Electrical Resistance (Ω)
FCD-250mA	FCD-P-250mA	250mA	0.0071	4.5700
FCD-315mA	FCD-P-315mA	315mA	0.0142	3.1500
FCD-400mA	FCD-P-400mA	400mA	0.0200	2.0600
FCD-500mA	FCD-P-500mA	500mA	0.0309	1.5700
FCD-630mA	FCD-P-630mA	630mA	0.0671	1.1100
FCD-800mA	FCD-P-800mA	800mA	0.1211	0.7840
FCD-1A	FCD-P-1A	1A	0.2019	0.5500
FCD-1.25A	FCD-P-1.25A	1.25A	0.4489	0.3980
FCD-1.6A	FCD-P-1.6A	1.6A	1.2430	0.2450
FCD-2A	FCD-P-2A	2A	2.2040	0.1830
FCD-2.5A	FCD-P-2.5A	2.5A	1.9951	0.0615
FCD-3.15A	FCD-P-3.15A	3.15A	4.2710	0.0445
FCD-4A	FCD-P-4A	4A	12.220	0.0286
FCD-5A	FCD-P-5A	5A	24.206	0.0219
FCD-6.3A	FCD-P-6.3A	6.3A	51.308	0.0146
FCD-8A	FCD-P-8A	8A	149.08	0.0086
FCD-10A	FCD-P-10A	10A	227.40	0.0071
FCD-12A	FCD-P-12A	12A	360.46	0.0052
FCD-12.5A	FCD-P-12.5A	12.5A	406.34	0.0047
FCD-15A	FCD-P-15A	15A	602.50	0.0040
FCD-16A	FCD-P-16A	16A	694.42	0.0035
FCD-20A	FCD-P-20A	20A	1220.2	0.0024

Downloaded from Arrow.com.

Time vs Percent of Rated Current

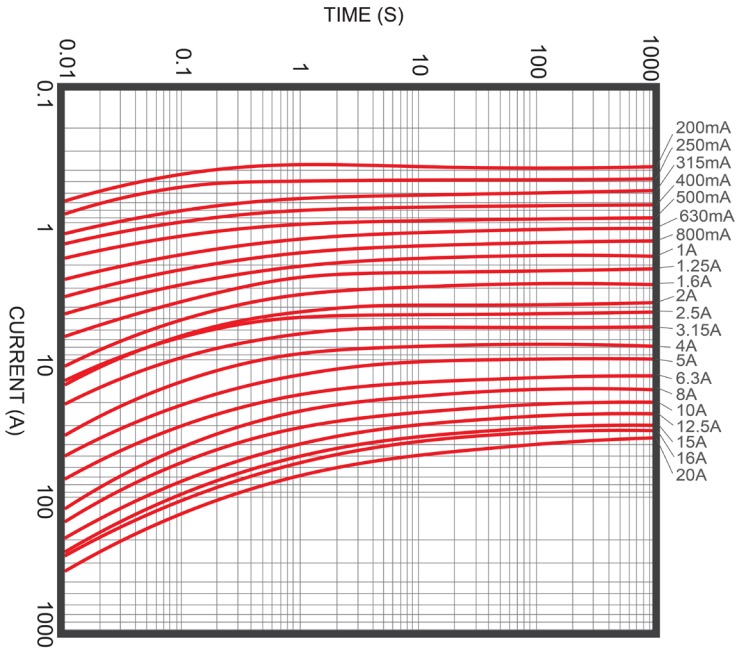

% of Rated Current	Current Rating	Min Hold Time	Max Hold Time
210%	100mA-4A	-	30 min
275%		10ms	2s
400%		3ms	300ms
1000%		-	20ms
210%	>4A-6.3A	-	30 min
275%		10ms	3s
400%		3ms	300ms
1000%		-	20ms
210%	>6.3A-10A	-	30 min
275%		40ms	20s
400%		10ms	1s
1000%		-	30ms
210%	>10A	-	30min
275%		40ms	20s
400%		10ms	1s
1000%		-	40ms

Temperature De-Rating Curve

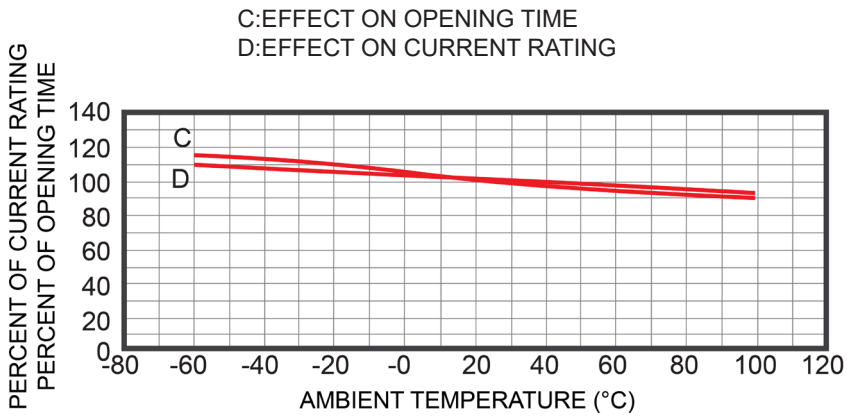

(II) Effect on rating and opening time in 5In of fast blow and slow-blow fuse

Downloaded from Arrow.com.

Blister Pack: Inches [mm]

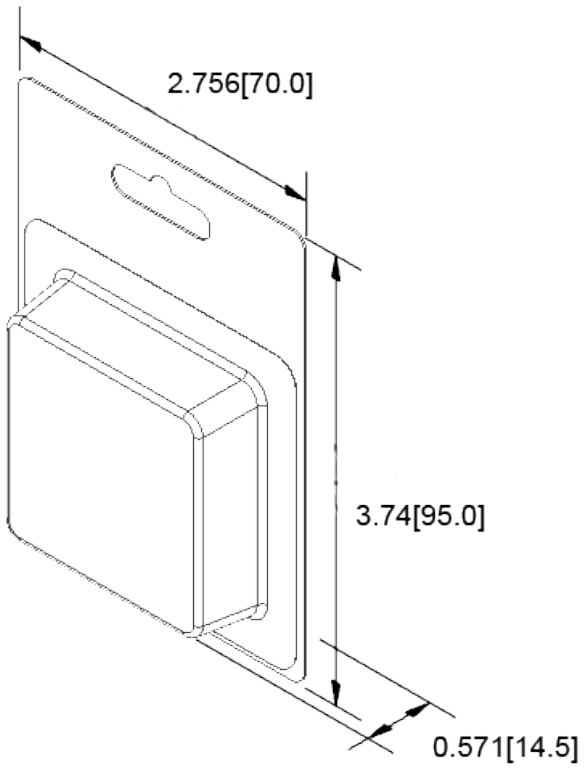

Pill Box: Inches [mm]

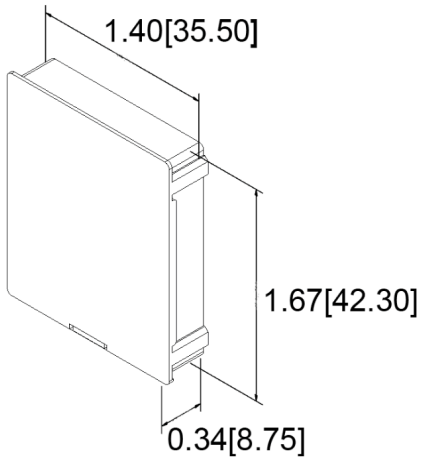

Retail Pack Part Number Information

Ampere Rating	Retail Pack # Blister Card (5PCS)	Retail Pack # Pill Box (5PCS)
250mA	FCD-250mA-BP	FCD-250mA-BX
315mA	FCD-315mA-BP	FCD-315mA-BX
400mA	FCD-400mA-BP	FCD-400mA-BX
500mA	FCD-500mA-BP	FCD-500mA-BX
630mA	FCD-630mA-BP	FCD-630mA-BX
800mA	FCD-800mA-BP	FCD-800mA-BX
1A	FCD-1A-BP	FCD-1A-BX
1.25A	FCD-1.25A-BP	FCD-1.25A-BX
1.6A	FCD-1.6A-BP	FCD-1.6A-BX
2A	FCD-2A-BP	FCD-2A-BX
2.5A	FCD-2.5A-BP	FCD-2.5A-BX
3.15A	FCD-3.15A-BP	FCD-3.15A-BX
4A	FCD-4A-BP	FCD-4A-BX
5A	FCD-5A-BP	FCD-5A-BX
6.3A	FCD-6.3A-BP	FCD-6.3A-BX
8A	FCD-8A-BP	FCD-8A-BX
10A	FCD-10A-BP	FCD-10A-BX
12.5A	FCD-12.5A-BP	FCD-12.5A-BX
15A	FCD-15A-BP	FCD-15A-BX
16A	FCD-16A-BP	FCD-16A-BX

* Retail packs are for cartridge style fuses only

Rev	Date of issue	Revision Notes	Designed	Approved
O	12-11-2025	Updated Amperages	RC	OF

Downloaded from Arrow.com.