PRODUCT NUMBER: 838-22-014-30-001101

www.mill-max.com
DATA SHEET

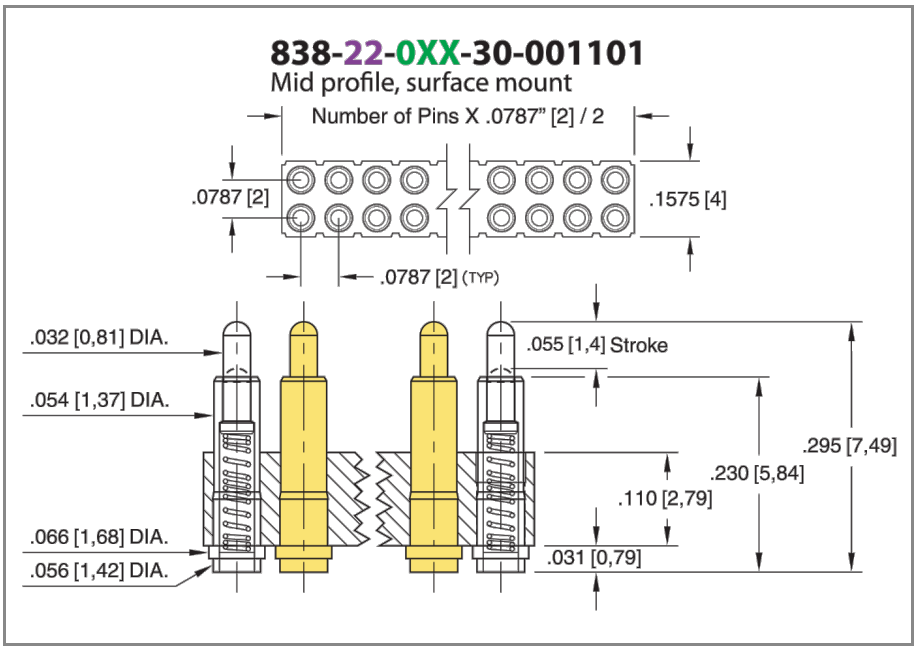



General Information		
1	**Product Lifecycle:**	Active
	Product Family:	Spring-Loaded Connector
	Type:	Pogo Pin Header Strip
2	**Description:**	PCB Mount Spring-Loaded Header
	Description2:	Vertical Surface Mount
	Pitch:	.079" (2,007mm)
	Number of Pins:	14
	Head Type:	Plunger
	Tail Type:	N/A
3	**Operating Temperature Range:**	-55/+125° C
	Country of Origin:	USA
4	**ROHS:**	Yes

Downloaded from Arrow.com.

838-22-014-30-001101 - SPECIFICATIONS

Product Attributes	
Plating Code:	22 - Body/Plunger Plating: 20µ" Gold - Spring Plating: 10µ" Gold
Insulator Material:	Nylon 4/6
Rows:	Double Row
Frame Type:	N/A
5 Spring Number:	86 - Standard Force Stainless Steel
Plunger Type:	Round
Stroke:	.055" (1,397mm)
Mid Stroke:	0.0275
Mounting Tab:	N/A

Key Dimensions	
Above Board Height:	.295" (7,493mm)
Head Diameter:	.032" (0,813mm)
Initial Height:	.295" (7,493mm)
Insulator Height:	.110" (2,794mm)

Electrical Specifications	
6 Current Rating (Amps):	11 Amps
Contact Resistance:	40.00mΩ Max
Insulation Resistance:	10,000 MΩ min.
Rated Voltage:	100 VRMS/150 VDC
Dielectric Withstanding Voltage:	1,000 VRMS min.

Mechanical Specifications	
Mechanical life (Durability):	100,000 to 1,000,000 Cycles @ Mid-Stroke
7 Shock:	No Elect. Discontinuity > 1µs @ 50g
8 Vibration:	No Elect. Discontinuity > 1µs @ 10-2000HZ, 15 G

Mounting Specifications	
Mounting Type:	Surface Mount
Mounting Tab:	N/A
SMT Pad Size:	0.066

Downloaded from Arrow.com.

Environmental & Export Classifications	
Cage Code:	3N087
ECCN:	Contact Factory
HTSUS:	8536.90.4040
Moisture Sensitivity Level (MSL):	1 (Unlimited)
Prop 65:	N
REACH Status:	REACH Unaffected
Special Handling Code:	UNDF
Static Sensitive:	N

Packaging Information	
9 **Packaging:**	Packaged in Box or Tube
Tape Width:	N/A

Downloaded from Arrow.com.

NOTES:

1. Part is Active and in Production, No Scheduled Obsolescence
2. **Standard Tolerances**
   Assembly tolerance: +/-.010" (.25mm)
   Connector Length "L"

Connector Length "L"	Tolerance
L ≤ 2" (L ≤ 50.8 mm)	+/- .005" (+/- .127 mm)
2< L ≤ 3" (50.8 < L ≤ 76.2 mm)	+ .007/ - .006" (+ .178/ -.152 mm)
3< L ≤ 4" (76.2 < L ≤ 101.6 mm)	+ .009 / - .007" (+ .229 / - .178 mm)
4< L ≤ 5" (101.6 < L ≤ 127 mm)	+ .011 / - .008" (+ .279 / - .203 mm)
5< L ≤ 6.4" (127 < L ≤ 162.56 mm)	+ .013 / - .009" (+ .330 / - .229 mm)

   Insulator width: +/-.005 (.13mm)
   Insulator height: +/-.005 (.13mm)
   Co-planarity of SMT connectors: .005" (.13mm) up to 1" (25.4mm) in connector length
   Insulator Flatness: .005" (.13mm) up to 1" (25.4mm) in connector length
   Pin Length: +/-.006 (.15mm)
   Pin Diameter: +/-.002 (.051mm)
   Pin Angle: +/-2°
3. Per IEC 60512-11-(4,-9,-10,-12)
4. Mill-Max products labeled with the RoHS symbol are compliant with all three ROHS Directives. All of our products previously described as RoHS (2002/95/EC) and RoHS-2 (2011/65/EC) are also compliant with RoHS-3 (2015/863/EU).
5. Click the Link for Force vs. Travel and Current-Temperature Derating Curve
6. Maximum Current Per Pin = 11A @ 30˚ C Temp. Rise
7. For discrete pin only. Per IEC 60512-6-3: Test 6c: Shock
8. For discrete pin only. Per IEC 60512-6-4: Test 6d: Vibration (sinusoidal)
9. Not all part numbers in the series may be packaged in tubes. Some specific part numbers may be packaged in a box.

ADDITIONAL PARTS, PACKAGING & ASSEMBLY INFO

Suggested P.C.B. Footprint

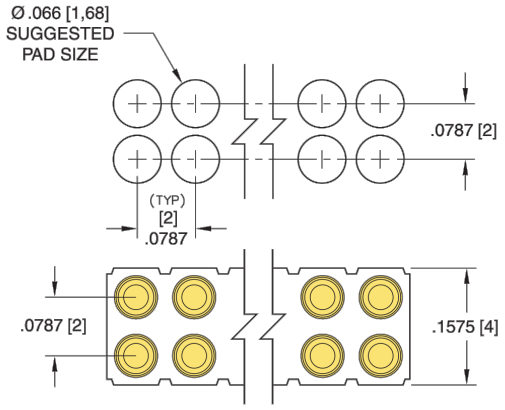

Downloaded from Arrow.com.

ADDITIONAL NOTES AND SPECIFICATIONS

In the interest of improved design, quality and performance , Mill-Max reserves the right to make changes in its specifications without prior notice. Specifications and tolerances are provided wherever possible. The tolerance on dimensions of critical to function features is typically held tighter than the stated standard tolerances, such as press-fits, holes and lengths affecting the coplanarity of SMT products. Due to the wide variety of interconnects Mill-Max offers, the specific tolerances vary from product to product. If you need information regarding the tolerance of a particular part, please contact Technical Services.

RELATED LINKS AND DOCUMENTS

- Product Detail: 838-22-014-30-001101 - Spring-Loaded Header
- Engineering Notebook: **Introduction to Spring-Loaded Pogo Pins & Connectors**
- Environmental Compliance: https://www.mill-max.com/rohs

Downloaded from Arrow.com.