# ON Semiconductor

# Is Now

**To learn more about onsemi™, please visit our website at**
**www.onsemi.com**

**onsemi** and onsemi and other names, marks, and brands are registered and/or common law trademarks of Semiconductor Components Industries, LLC dba "**onsemi**" or its affiliates and/or subsidiaries in the United States and/or other countries. **onsemi** owns the rights to a number of patents, trademarks, copyrights, trade secrets, and other intellectual property. A listing of **onsemi** product/patent coverage may be accessed at www.onsemi.com/site/pdf/Patent-Marking.pdf. **onsemi** reserves the right to make changes at any time to any products or information herein, without notice. The information herein is provided "as-is" and **onsemi** makes no warranty, representation or guarantee regarding the accuracy of the information, product features, availability, functionality, or suitability of its products for any particular purpose, nor does **onsemi** assume any liability arising out of the application or use of any product or circuit, and specifically disclaims any and all liability, including without limitation special, consequential or incidental damages. Buyer is responsible for its products and applications using **onsemi** products, including compliance with all laws, regulations and safety requirements or standards, regardless of any support or applications information provided by **onsemi**. "Typical" parameters which may be provided in **onsemi** data sheets and/or specifications can and do vary in different applications and actual performance may vary over time. All operating parameters, including "Typicals" must be validated for each customer application by customer's technical experts. **onsemi** does not convey any license under any of its intellectual property rights nor the rights of others. **onsemi** products are not designed, intended, or authorized for use as a critical component in life support systems or any FDA Class 3 medical devices or medical devices with a same or similar classification in a foreign jurisdiction or any devices intended for implantation in the human body. Should Buyer purchase or use **onsemi** products for any such unintended or unauthorized application, Buyer shall indemnify and hold **onsemi** and its officers, employees, subsidiaries, affiliates, and distributors harmless against all claims, costs, damages, and expenses, and reasonable attorney fees arising out of, directly or indirectly, any claim of personal injury or death associated with such unintended or unauthorized use, even if such claim alleges that **onsemi** was negligent regarding the design or manufacture of the part. **onsemi** is an Equal Opportunity/Affirmative Action Employer. This literature is subject to all applicable copyright laws and is not for resale in any manner. Other names and brands may be claimed as the property of others.

Downloaded from Arrow.com.

# Single Inverter

# NL17SV04

The NL17SV04 is a single inverter in tiny footprint packages. The device is designed to operate for $V_{CC}$ = 0.9 V to 3.6 V.

### Features

- Designed for 0.9 V to 3.6 V $V_{CC}$ Operation
- 1.5 ns $t_{PD}$ at 3.3 V (Typ)
- Inputs/Outputs Over−Voltage Tolerant up to 3.6 V
- $I_{OFF}$ Supports Partial Power Down Protection
- Source/Sink 24 mA at 3.3 V
- Available in SOT−353, SOT−553, SOT−953, SC−74A and UDFN Packages
- NLV Prefix for Automotive and Other Applications Requiring Unique Site and Control Change Requirements; AEC−Q100 Qualified and PPAP Capable
- These Devices are Pb−Free, Halogen Free/BFR Free and are RoHS Compliant

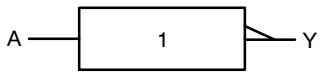


**Figure 1. Logic Symbol**

**ON Semiconductor®**

www.onsemi.com

**MARKING DIAGRAMS**

**SC−74A**
**CASE 318BQ**

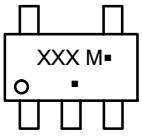

**SC−88A**
**(SC−70−5/SOT−353)**
**CASE 419A−02**

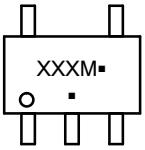

**SOT−553, 5 LEAD**
**CASE 463B**

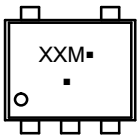

**SOT−953**
**CASE 527AE**

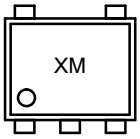

**UDFN6, 1.45x1.0, 0.5P**
**CASE 517AQ**

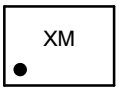

**UDFN6, 1x1, 0.35P**
**CASE 517BX**

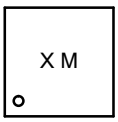


X, XX = Specific Device Code
M = Date Code*
▪ = Pb−Free Package

(Note: Microdot may be in either location)

*This information is generic. Please refer to device data sheet for actual part marking. Pb−Free indicator, “G” or microdot “▪”, may or may not be present.

### ORDERING INFORMATION

See detailed ordering, marking and shipping information in the package dimensions section on page 7 of this data sheet.

© Semiconductor Components Industries, LLC, 2019


Downloaded from Arrow.com.

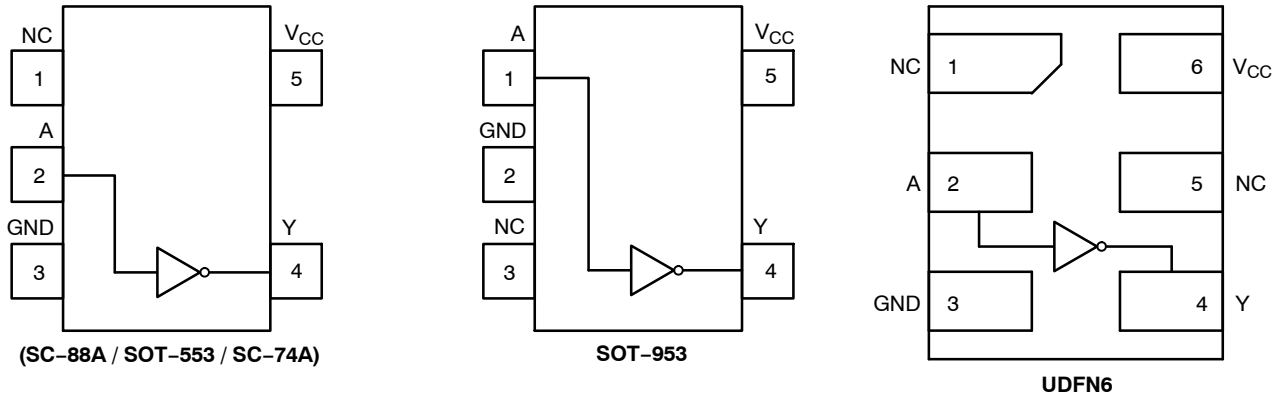


**Figure 2. Pinout** (Top View)

**PIN ASSIGNMENT**

| Pin | SC−88A / SOT553 / SC−74A | SOT−953 | UDFN6 |
|---|---|---|---|
| 1 | NC | A | NC |
| 2 | A | GND | A |
| 3 | GND | NC | GND |
| 4 | Y | Y | Y |
| 5 | $V_{CC}$ | $V_{CC}$ | NC |
| 6 | – | – | $V_{CC}$ |

**FUNCTION TABLE**

| Input | Output |
|---|---|
| **A** | **Y** |
| L | H |
| H | L |



Downloaded from Arrow.com.

## MAXIMUM RATINGS

| Symbol | Characteristics | | Value | Unit |
|---|---|---|---|---|
| $V_{CC}$ | DC Supply Voltage | | −0.5 to +4.3 | V |
| $V_{IN}$ | DC Input Voltage | | −0.5 to +4.3 | V |
| $V_{OUT}$ | DC Output Voltage | Active−Mode (High or Low State)<br>Tri−State Mode (Note 1)<br>Power−Down Mode ($V_{CC}$ = 0 V) | −0.5 to $V_{CC}$ + 0.5<br>−0.5 to +4.3<br>−0.5 to +4.3 | V |
| $I_{IK}$ | DC Input Diode Current | $V_{IN}$ < GND | −50 | mA |
| $I_{OK}$ | DC Output Diode Current | $V_{OUT}$ < GND | −50 | mA |
| $I_{OUT}$ | DC Output Source/Sink Current | | ±50 | mA |
| $I_{CC}$ or $I_{GND}$ | DC Supply Current per Supply Pin or Ground Pin | | ±50 | mA |
| $T_{STG}$ | Storage Temperature Range | | −65 to +150 | °C |
| $T_L$ | Lead Temperature, 1 mm from Case for 10 Seconds | | 260 | °C |
| $T_J$ | Junction Temperature Under Bias | | +150 | °C |
| $\theta_{JA}$ | Thermal Resistance (Note 2) | SC−88A<br>SOT−553<br>SOT−953<br>SC−74A<br>UDFN6 | 377<br>324<br>254<br>320<br>154 | °C/W |
| $P_D$ | Power Dissipation in Still Air | SC−88A<br>SOT−553<br>SOT−953<br>SC−74A<br>UDFN6 | 332<br>386<br>491<br>390<br>812 | mW |
| MSL | Moisture Sensitivity | | Level 1 | – |
| $F_R$ | Flammability Rating | Oxygen Index: 28 to 34 | UL 94 V−0 @ 0.125 in | – |
| $V_{ESD}$ | ESD Withstand Voltage (Note 3) | Human Body Model<br>Charged Device Model | 2000<br>1000 | V |
| $I_{Latchup}$ | Latchup Performance (Note 4) | | ±100 | mA |

Stresses exceeding those listed in the Maximum Ratings table may damage the device. If any of these limits are exceeded, device functionality should not be assumed, damage may occur and reliability may be affected.

1. Applicable to devices with outputs that may be tri−stated.
2. Measured with minimum pad spacing on an FR4 board, using 10 mm−by−1 inch, 2 ounce copper trace no air flow per JESD51−7.
3. HBM tested to EIA / JESD22−A114−A. CDM tested to JESD22−C101−A. JEDEC recommends that ESD qualification to EIA/JESD22−A115A (Machine Model) be discontinued.
4. Tested to EIA/JESD78 Class II.



Downloaded from Arrow.com.

## RECOMMENDED OPERATING CONDITIONS

| Symbol | Parameter | | Min | Max | Unit |
|---|---|---|---|---|---|
| $V_{CC}$ | Positive DC Supply Voltage | | 0.9 | 3.6 | V |
| $V_{IN}$ | DC Input Voltage | | 0 | 3.6 | V |
| $V_{OUT}$ | DC Output Voltage | Active−Mode (High or Low State)<br>Tri−State Mode (Note 1)<br>Power−Down Mode ($V_{CC}$ = 0 V) | 0<br>0<br>0 | $V_{CC}$<br>3.6<br>3.6 | |
| $T_A$ | Operating Temperature Range | | −55 | +125 | °C |
| $t_r$ , $t_f$ | Input Transition Rise and Fall Time | | 0 | 20 | ns/V |

Functional operation above the stresses listed in the Recommended Operating Ranges is not implied. Extended exposure to stresses beyond the Recommended Operating Ranges limits may affect device reliability.

## DC ELECTRICAL CHARACTERISTICS

| Symbol | Parameter | Condition | $V_{CC}$ (V) | $T_A$ = 25°C | | | $T_A$ = −55°C to +125°C | | Unit |
|---|---|---|---|---|---|---|---|---|---|
| | | | | Min | Typ | Max | Min | Max | |
| $V_{IH}$ | High−Level Input Voltage | | 0.9 | – | 0.5 | – | – | – | V |
| | | | 1.1 to 1.3 | 0.65 x $V_{CC}$ | – | – | 0.65 x $V_{CC}$ | – | |
| | | | 1.4 to 1.6 | 0.65 x $V_{CC}$ | – | – | 0.65 x $V_{CC}$ | – | |
| | | | 1.65 to 1.95 | 0.65 x $V_{CC}$ | – | – | 0.65 x $V_{CC}$ | – | |
| | | | 2.3 to < 2.7 | 1.6 | – | – | 1.6 | – | |
| | | | 2.7 to 3.6 | 2.0 | – | – | 2.0 | – | |
| $V_{IL}$ | Low−Level Input Voltage | | 0.9 | – | 0.5 | – | – | – | V |
| | | | 1.1 to 1.3 | – | – | 0.35 x $V_{CC}$ | – | 0.35 x $V_{CC}$ | |
| | | | 1.4 to 1.6 | – | – | 0.35 x $V_{CC}$ | – | 0.35 x $V_{CC}$ | |
| | | | 1.65 to 1.95 | – | – | 0.35 x $V_{CC}$ | – | 0.35 x $V_{CC}$ | |
| | | | 2.3 to < 2.7 | – | – | 0.7 | – | 0.7 | |
| | | | 2.7 to 3.6 | – | – | 0.8 | – | 0.8 | |
| $V_{OH}$ | High−Level Output Voltage | $V_{IN}$ = $V_{IH}$ or $V_{IL}$ | | | | | | | V |
| | | $I_{OH}$ = −100 μA | 0.9 | – | $V_{CC}$ − 0.1 | – | – | – | |
| | | | 1.1 to 1.3 | $V_{CC}$ − 0.1 | – | – | $V_{CC}$ − 0.1 | – | |
| | | | 1.4 to 1.6 | $V_{CC}$ − 0.1 | – | – | $V_{CC}$ − 0.1 | – | |
| | | | 1.65 to 1.95 | $V_{CC}$ − 0.2 | – | – | $V_{CC}$ − 0.2 | – | |
| | | | 2.3 to <2.7 | $V_{CC}$ − 0.2 | – | – | $V_{CC}$ − 0.2 | – | |
| | | | 2.7 to 3.6 | $V_{CC}$ − 0.2 | – | – | $V_{CC}$ − 0.2 | – | |
| | | $I_{OH}$ = −2 mA | 1.1 to 1.3 | 0.75 x $V_{CC}$ | – | – | 0.75 x $V_{CC}$ | – | |
| | | $I_{OH}$ = −4 mA | 1.4 to 1.6 | 0.75 x $V_{CC}$ | – | – | 0.75 x $V_{CC}$ | – | |
| | | $I_{OH}$ = −6 mA | 1.65 to 1.95 | 1.25 | – | – | 1.25 | – | |
| | | | 2.3 to 2.7 | 2.0 | – | – | 2.0 | – | |
| | | $I_{OH}$ = −12 mA | 2.3 to 2.7 | 1.8 | – | – | 1.8 | – | |
| | | | 2.7 to 3.6 | 2.2 | – | – | 2.2 | – | |
| | | $I_{OH}$ = −18 mA | 2.3 to 2.7 | 1.7 | – | – | 1.7 | – | |
| | | | 2.7 to 3.6 | 2.4 | – | – | 2.4 | – | |
| | | $I_{OH}$ = −24 mA | 2.7 to 3.6 | 2.2 | – | – | 2.2 | – | |



Downloaded from Arrow.com.

## DC ELECTRICAL CHARACTERISTICS (continued)

| Symbol | Parameter | Condition | $V_{CC}$ (V) | $T_A$ = 25°C | | | $T_A$ = −55°C to +125°C | | Unit |
|---|---|---|---|---|---|---|---|---|---|
| | | | | Min | Typ | Max | Min | Max | |
| $V_{OL}$ | Low−Level Output Voltage | $V_{IN}$ = $V_{IH}$ or $V_{IL}$ | | | | | | | V |
| | | $I_{OL}$ = 100 μA | 0.9 | – | 0.1 | – | – | – | |
| | | | 1.1 to 1.3 | – | – | 0.1 | – | 0.1 | |
| | | | 1.4 to 1.6 | – | – | 0.1 | – | 0.1 | |
| | | | 1.65 to 1.95 | – | – | 0.2 | – | 0.2 | |
| | | | 2.3 to < 2.7 | – | – | 0.2 | – | 0.2 | |
| | | | 2.7 to 3.6 | – | – | 0.2 | – | 0.2 | |
| | | $I_{OL}$ = 2 mA | 1.1 to 1.3 | – | – | 0.25 x $V_{CC}$ | – | 0.25 x $V_{CC}$ | |
| | | $I_{OL}$ = 4 mA | 1.4 to 1.6 | – | – | 0.25 x $V_{CC}$ | – | 0.25 x $V_{CC}$ | |
| | | $I_{OL}$ = 6 mA | 1.65 to 1.95 | – | – | 0.3 | – | 0.3 | |
| | | | 2.3 to 2.7 | – | – | 0.3 | – | 0.3 | |
| | | $I_{OL}$ = 12 mA | 2.3 to 2.7 | – | – | 0.4 | – | 0.4 | |
| | | | 2.7 to 3.6 | – | – | 0.4 | – | 0.4 | |
| | | $I_{OL}$ = 18 mA | 2.3 to 2.7 | – | – | 0.6 | – | 0.6 | |
| | | | 2.7 to 3.6 | – | – | 0.4 | – | 0.4 | |
| | | $I_{OL}$ = 24 mA | 2.7 to 3.6 | – | – | 0.55 | – | 0.55 | |
| $I_{IN}$ | Input Leakage Current | $V_{IN}$ = 3.6 V or GND | 0.9 to 3.6 | – | – | ±0.1 | – | ±0.9 | μA |
| $I_{OFF}$ | Power Off Leakage Current | $V_{IN}$ = 3.6 V or $V_{OUT}$ = 3.6 V | 0 | – | – | 1.0 | – | 5.0 | μA |
| $I_{CC}$ | Quiescent Supply Current | $V_{IN}$ = $V_{CC}$ or GND | 0.9 to 3.6 | – | – | 0.9 | – | 5.0 | μA |

Product parametric performance is indicated in the Electrical Characteristics for the listed test conditions, unless otherwise noted. Product performance may not be indicated by the Electrical Characteristics if operated under different conditions.

## AC ELECTRICAL CHARACTERISTICS

| Symbol | Parameter | Condition | $V_{CC}$ (V) | $T_A$ = 25°C | | | $T_A$ = −55°C to +125°C | | Unit |
|---|---|---|---|---|---|---|---|---|---|
| | | | | Min | Typ | Max | Min | Max | |
| $t_{PLH}$, $t_{PHL}$ | Propagation Delay, A to Y (Figures 3 and 4) | $R_L$ = 1 MΩ, $C_L$ = 15 pF | 0.9 | – | 11.7 | – | – | – | ns |
| | | $R_L$ = 2 kΩ, $C_L$ = 15 pF | 1.1 to 1.3 | – | 5.5 | 9.0 | – | 13.9 | |
| | | | 1.4 to 1.6 | – | 3.9 | 5.1 | – | 6.0 | |
| | | $R_L$ = 500 Ω, $C_L$ = 30 pF | 1.65 to 1.95 | – | 2.4 | 4.2 | – | 5.2 | |
| | | | 2.3 to 2.7 | – | 1.8 | 2.7 | – | 3.4 | |
| | | | 2.7 to 3.6 | – | 1.5 | 2.3 | – | 2.8 | |

## CAPACITIVE CHARACTERISTICS

| Symbol | Parameter | Test Condition | Typical ($T_A$ = 25°C) | Unit |
|---|---|---|---|---|
| $C_{IN}$ | Input Capacitance | $V_{CC}$ = 0 V | 2.0 | pF |
| $C_{OUT}$ | Output Capacitance | $V_{CC}$ = 0 V | 4.5 | pF |
| $C_{PD}$ | Power Dissipation Capacitance (Note 5) | 10 MHz, $V_{CC}$ = 0.9 to 3.6 V, $V_{IN}$ = 0 V or $V_{CC}$ | 20 | pF |

5. $C_{PD}$ is defined as the value of the internal equivalent capacitance which is calculated from the operating current consumption without load. Average operating current can be obtained by the equation $I_{CC(OPR)} = C_{PD} \bullet V_{CC} \bullet f_{in} + I_{CC}$. $C_{PD}$ is used to determine the no−load dynamic power consumption: $P_D = C_{PD} \bullet V_{CC}^2 \bullet f_{in} + I_{CC} \bullet V_{CC}$.



Downloaded from Arrow.com.

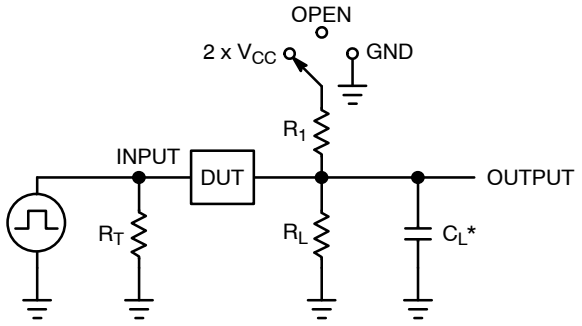


$C_L$ includes probe and jig capacitance
$R_T$ is $Z_{OUT}$ of pulse generator (typically 50 Ω)
f = 1 MHz

| Test | Switch Position |
|---|---|
| $t_{PLH}$ / $t_{PHL}$ | Open |
| $t_{PLZ}$ / $t_{PZL}$ | 2 x $V_{CC}$ |
| $t_{PHZ}$ / $t_{PZH}$ | GND |

**Figure 3. Test Circuit**

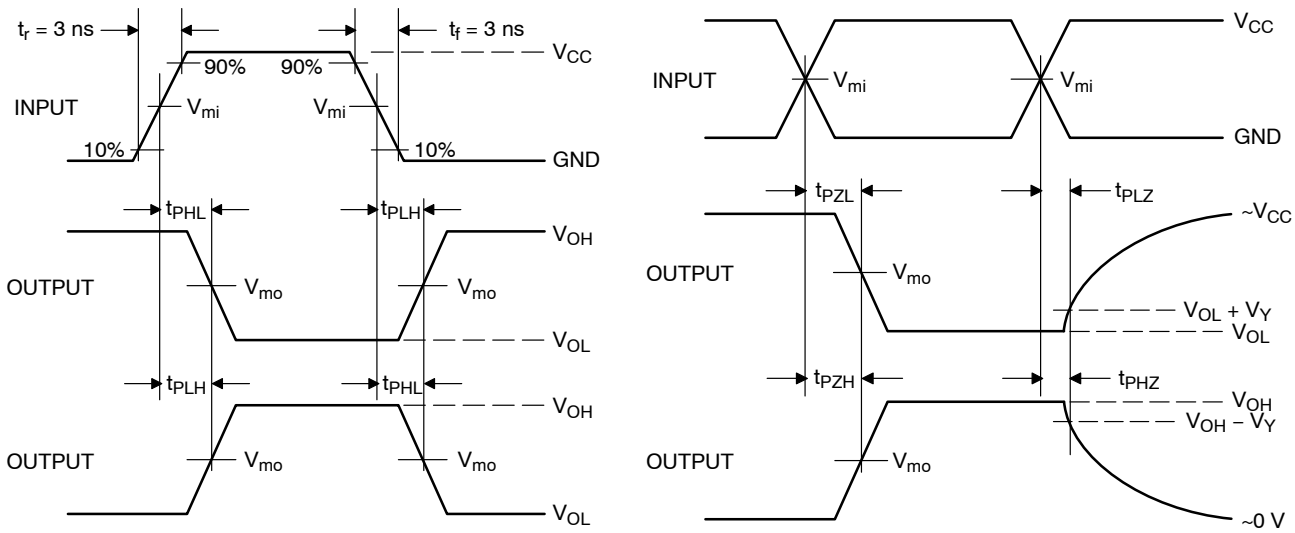


| $V_{CC}$, V | $V_{mi}$, V | $V_{mo}$, V | | $V_Y$, V |
|---|---|---|---|---|
| | | $t_{PLH}$, $t_{PHL}$ | $t_{PZL}$, $t_{PLZ}$, $t_{PZH}$, $t_{PHZ}$ | |
| 0.9 | $V_{CC}$ / 2 | $V_{CC}$ / 2 | $V_{CC}$ / 2 | 0.1 |
| 1.1 to 1.3 | $V_{CC}$ / 2 | $V_{CC}$ / 2 | $V_{CC}$ / 2 | 0.1 |
| 1.4 to 1.6 | $V_{CC}$ / 2 | $V_{CC}$ / 2 | $V_{CC}$ / 2 | 0.1 |
| 1.65 to 1.95 | $V_{CC}$ / 2 | $V_{CC}$ / 2 | $V_{CC}$ / 2 | 0.15 |
| 2.3 to 2.7 | $V_{CC}$ / 2 | $V_{CC}$ / 2 | $V_{CC}$ / 2 | 0.15 |
| 3.0 to 3.6 | 1.5 | 1.5 | 1.5 | 0.3 |

**Figure 4. Switching Waveforms**



Downloaded from Arrow.com.

## ORDERING INFORMATION

| Device | Package | Marking | Pin 1 Orientation (See below) | Shipping† |
|---|---|---|---|---|
| NL17SV04DFT2G (Contact ON Semiconductor) | SC−88A | TBD | Q4 | 3000 / Tape & Reel |
| NL17SV04XV5T2G | SOT−553 | UL | Q4 | 4000 / Tape & Reel |
| NL17SV04P5T5G (Contact ON Semiconductor) | SOT−953 | TBD | Q2 | 8000 / Tape & Reel |
| NL17SV04DBVT1G (Contact ON Semiconductor) | SC−74A | TBD | Q4 | 3000 / Tape & Reel |
| NL17SV04MU1TCG (Contact ON Semiconductor) | UDFN6, 1.45 x 1.0, 0.5P | TBD | Q4 | 3000 / Tape & Reel |
| NL17SV04MU3TCG (Contact ON Semiconductor) | UDFN6, 1.0 x 1.0, 0.35P | TBD | Q4 | 3000 / Tape & Reel |

†For information on tape and reel specifications, including part orientation and tape sizes, please refer to our Tape and Reel Packaging Specifications Brochure, BRD8011/D.

*NLV Prefix for Automotive and Other Applications Requiring Unique Site and Control Change Requirements; AEC−Q100 Qualified and PPAP Capable.

### Pin 1 Orientation in Tape and Reel

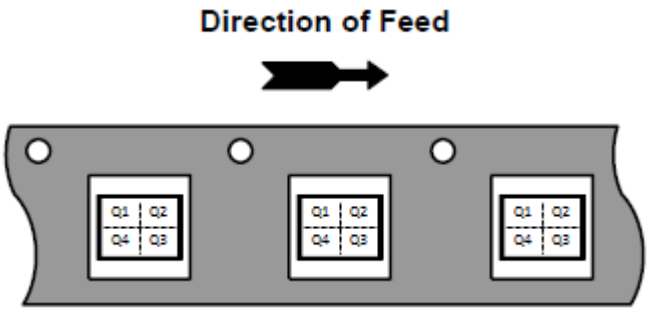




Downloaded from Arrow.com.

## PACKAGE DIMENSIONS

**SC−74A**
CASE 318BQ
ISSUE B

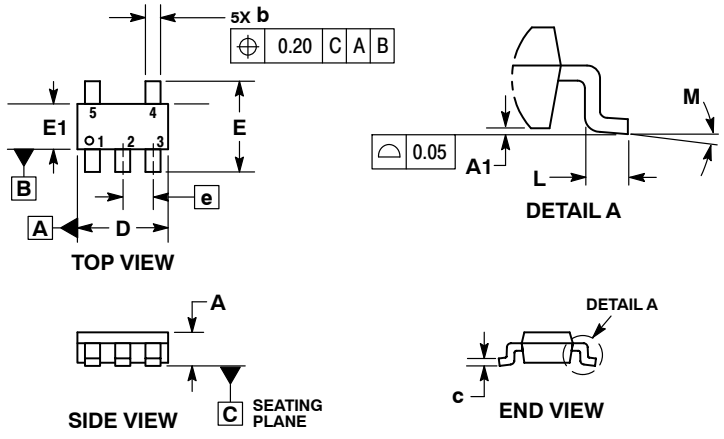


NOTES:
1. DIMENSIONING AND TOLERANCING PER ASME Y14.5M, 1994.
2. CONTROLLING DIMENSION: MILLIMETERS.
3. MAXIMUM LEAD THICKNESS INCLUDES LEAD FINISH THICKNESS. MINIMUM LEAD THICKNESS IS THE MINIMUM THICKNESS OF BASE MATERIAL.
4. DIMENSIONS A AND B DO NOT INCLUDE MOLD FLASH, PROTRUSIONS, OR GATE BURRS. MOLD FLASH, PROTRUSIONS, OR GATE BURRS SHALL NOT EXCEED 0.15 PER SIDE.

| | MILLIMETERS | |
|---|---|---|
| DIM | MIN | MAX |
| A | 0.90 | 1.10 |
| A1 | 0.01 | 0.10 |
| b | 0.25 | 0.50 |
| c | 0.10 | 0.26 |
| D | 2.85 | 3.15 |
| E | 2.50 | 3.00 |
| E1 | 1.35 | 1.65 |
| e | 0.95 BSC | |
| L | 0.20 | 0.60 |
| M | 0 ° | 10 ° |

**RECOMMENDED SOLDERING FOOTPRINT***

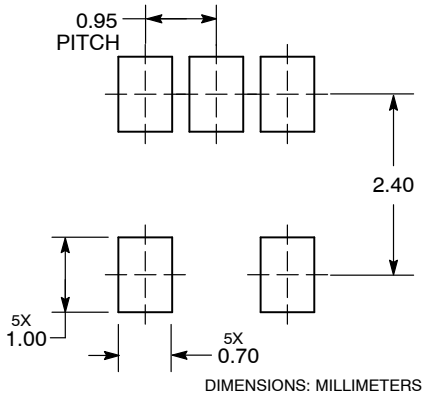


*For additional information on our Pb−Free strategy and soldering details, please download the ON Semiconductor Soldering and Mounting Techniques Reference Manual, SOLDERRM/D.



Downloaded from Arrow.com.

## PACKAGE DIMENSIONS

**SC−88A (SC−70−5/SOT−353)**
CASE 419A−02
ISSUE L

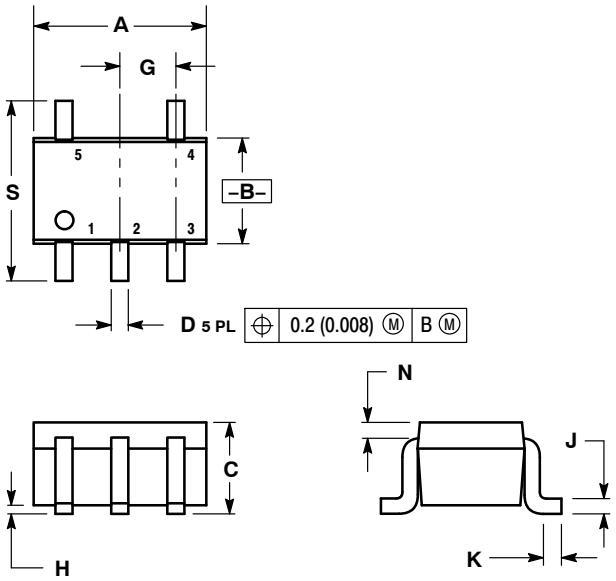


NOTES:
1. DIMENSIONING AND TOLERANCING PER ANSI Y14.5M, 1982.
2. CONTROLLING DIMENSION: INCH.
3. 419A−01 OBSOLETE. NEW STANDARD 419A−02.
4. DIMENSIONS A AND B DO NOT INCLUDE MOLD FLASH, PROTRUSIONS, OR GATE BURRS.

| | INCHES | | MILLIMETERS | |
|---|---|---|---|---|
| DIM | MIN | MAX | MIN | MAX |
| A | 0.071 | 0.087 | 1.80 | 2.20 |
| B | 0.045 | 0.053 | 1.15 | 1.35 |
| C | 0.031 | 0.043 | 0.80 | 1.10 |
| D | 0.004 | 0.012 | 0.10 | 0.30 |
| G | 0.026 BSC | | 0.65 BSC | |
| H | --- | 0.004 | --- | 0.10 |
| J | 0.004 | 0.010 | 0.10 | 0.25 |
| K | 0.004 | 0.012 | 0.10 | 0.30 |
| N | 0.008 REF | | 0.20 REF | |
| S | 0.079 | 0.087 | 2.00 | 2.20 |

## SOLDER FOOTPRINT

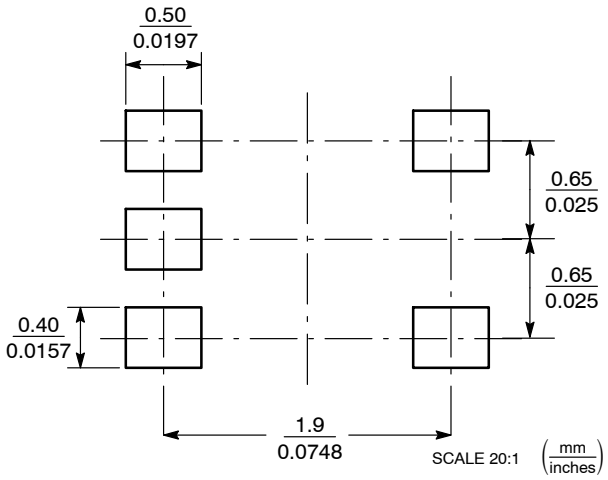


STYLE 1:
PIN 1. BASE
2. EMITTER
3. BASE
4. COLLECTOR
5. COLLECTOR

STYLE 2:
PIN 1. ANODE
2. EMITTER
3. BASE
4. COLLECTOR
5. CATHODE

STYLE 3:
PIN 1. ANODE 1
2. N/C
3. ANODE 2
4. CATHODE 2
5. CATHODE 1

STYLE 4:
PIN 1. SOURCE 1
2. DRAIN 1/2
3. SOURCE 1
4. GATE 1
5. GATE 2

STYLE 5:
PIN 1. CATHODE
2. COMMON ANODE
3. CATHODE 2
4. CATHODE 3
5. CATHODE 4

STYLE 6:
PIN 1. EMITTER 2
2. BASE 2
3. EMITTER 1
4. COLLECTOR
5. COLLECTOR 2/BASE 1

STYLE 7:
PIN 1. BASE
2. EMITTER
3. BASE
4. COLLECTOR
5. COLLECTOR

STYLE 8:
PIN 1. CATHODE
2. COLLECTOR
3. N/C
4. BASE
5. EMITTER

STYLE 9:
PIN 1. ANODE
2. CATHODE
3. ANODE
4. ANODE
5. ANODE



Downloaded from Arrow.com.

## PACKAGE DIMENSIONS

**SOT−553, 5 LEAD**
CASE 463B
ISSUE C

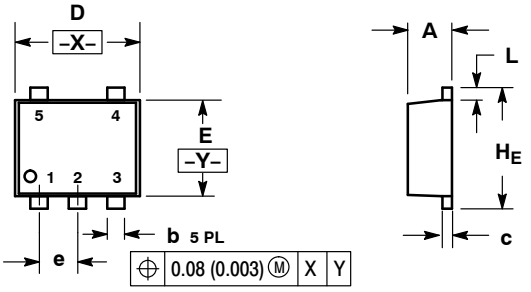


NOTES:
1. DIMENSIONING AND TOLERANCING PER ANSI Y14.5M, 1982.
2. CONTROLLING DIMENSION: MILLIMETERS
3. MAXIMUM LEAD THICKNESS INCLUDES LEAD FINISH THICKNESS. MINIMUM LEAD THICKNESS IS THE MINIMUM THICKNESS OF BASE MATERIAL.

| | MILLIMETERS | | | INCHES | | |
|---|---|---|---|---|---|---|
| DIM | MIN | NOM | MAX | MIN | NOM | MAX |
| A | 0.50 | 0.55 | 0.60 | 0.020 | 0.022 | 0.024 |
| b | 0.17 | 0.22 | 0.27 | 0.007 | 0.009 | 0.011 |
| c | 0.08 | 0.13 | 0.18 | 0.003 | 0.005 | 0.007 |
| D | 1.55 | 1.60 | 1.65 | 0.061 | 0.063 | 0.065 |
| E | 1.15 | 1.20 | 1.25 | 0.045 | 0.047 | 0.049 |
| e | 0.50 BSC | | | 0.020 BSC | | |
| L | 0.10 | 0.20 | 0.30 | 0.004 | 0.008 | 0.012 |
| $H_E$ | 1.55 | 1.60 | 1.65 | 0.061 | 0.063 | 0.065 |

**RECOMMENDED SOLDERING FOOTPRINT***

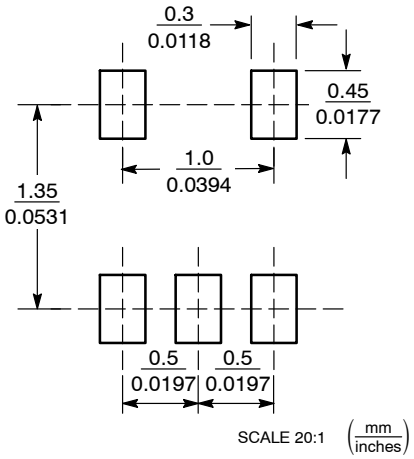


*For additional information on our Pb−Free strategy and soldering details, please download the ON Semiconductor Soldering and Mounting Techniques Reference Manual, SOLDERRM/D.

STYLE 1:
PIN 1. BASE
2. EMITTER
3. BASE
4. COLLECTOR
5. COLLECTOR

STYLE 2:
PIN 1. CATHODE
2. COMMON ANODE
3. CATHODE 2
4. CATHODE 3
5. CATHODE 4

STYLE 3:
PIN 1. ANODE 1
2. N/C
3. ANODE 2
4. CATHODE 2
5. CATHODE 1

STYLE 4:
PIN 1. SOURCE 1
2. DRAIN 1/2
3. SOURCE 1
4. GATE 1
5. GATE 2

STYLE 5:
PIN 1. ANODE
2. EMITTER
3. BASE
4. COLLECTOR
5. CATHODE

STYLE 6:
PIN 1. EMITTER 2
2. BASE 2
3. EMITTER 1
4. COLLECTOR 1
5. COLLECTOR 2/BASE 1

STYLE 7:
PIN 1. BASE
2. EMITTER
3. BASE
4. COLLECTOR
5. COLLECTOR

STYLE 8:
PIN 1. CATHODE
2. COLLECTOR
3. N/C
4. BASE
5. EMITTER

STYLE 9:
PIN 1. ANODE
2. CATHODE
3. ANODE
4. ANODE
5. ANODE



Downloaded from Arrow.com.

## PACKAGE DIMENSIONS

**UDFN6, 1.45x1.0, 0.5P**
CASE 517AQ
ISSUE O

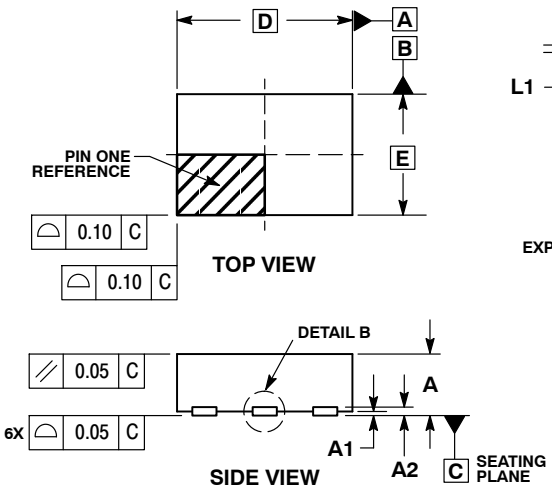


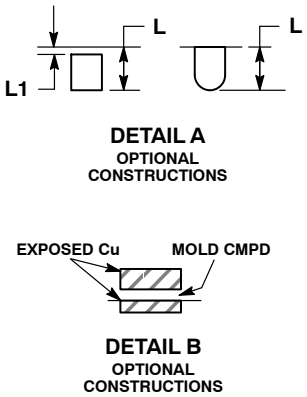


NOTES:
1. DIMENSIONING AND TOLERANCING PER ASME Y14.5M, 1994.
2. CONTROLLING DIMENSION: MILLIMETERS.
3. DIMENSION b APPLIES TO PLATED TERMINAL AND IS MEASURED BETWEEN 0.15 AND 0.30 mm FROM THE TERMINAL TIP.

| | MILLIMETERS | |
|---|---|---|
| DIM | MIN | MAX |
| A | 0.45 | 0.55 |
| A1 | 0.00 | 0.05 |
| A2 | 0.07 REF | |
| b | 0.20 | 0.30 |
| D | 1.45 BSC | |
| E | 1.00 BSC | |
| e | 0.50 BSC | |
| L | 0.30 | 0.40 |
| L1 | --- | 0.15 |

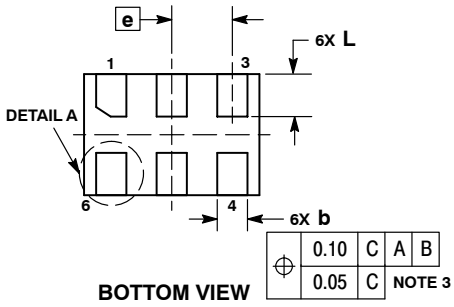


**MOUNTING FOOTPRINT**

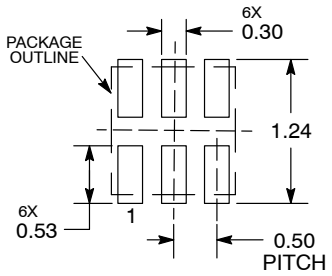


DIMENSIONS: MILLIMETERS

*For additional information on our Pb−Free strategy and soldering details, please download the ON Semiconductor Soldering and Mounting Techniques Reference Manual, SOLDERRM/D.



Downloaded from Arrow.com.

## PACKAGE DIMENSIONS

**UDFN6, 1x1, 0.35P**
CASE 517BX
ISSUE O

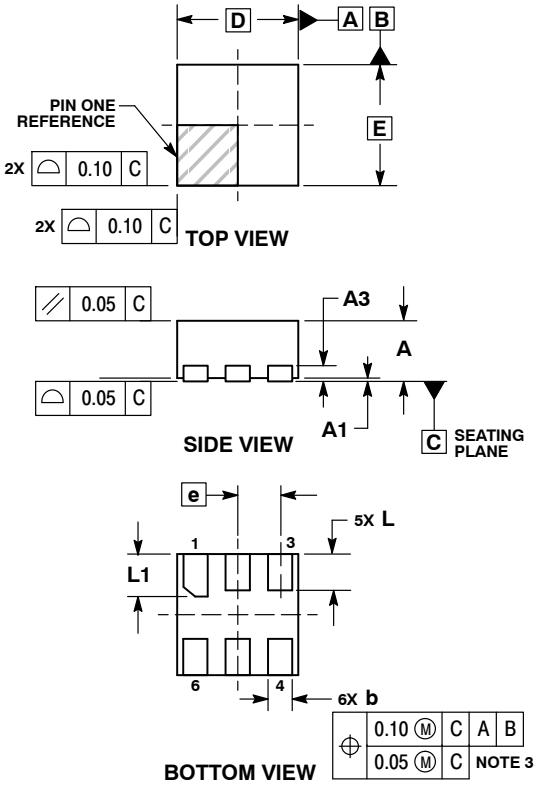


NOTES:
1. DIMENSIONING AND TOLERANCING PER ASME Y14.5M, 1994.
2. CONTROLLING DIMENSION: MILLIMETERS.
3. DIMENSION b APPLIES TO PLATED TERMINAL AND IS MEASURED BETWEEN 0.15 AND 0.20 MM FROM TERMINAL TIP.
4. PACKAGE DIMENSIONS EXCLUSIVE OF BURRS AND MOLD FLASH.

| | MILLIMETERS | |
|---|---|---|
| DIM | MIN | MAX |
| A | 0.45 | 0.55 |
| A1 | 0.00 | 0.05 |
| A3 | 0.13 REF | |
| b | 0.12 | 0.22 |
| D | 1.00 BSC | |
| E | 1.00 BSC | |
| e | 0.35 BSC | |
| L | 0.25 | 0.35 |
| L1 | 0.30 | 0.40 |

**RECOMMENDED SOLDERING FOOTPRINT***

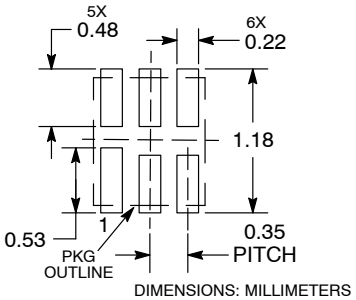


*For additional information on our Pb−Free strategy and soldering details, please download the ON Semiconductor Soldering and Mounting Techniques Reference Manual, SOLDERRM/D.



Downloaded from Arrow.com.

## PACKAGE DIMENSIONS

**SOT−953**
CASE 527AE
ISSUE E

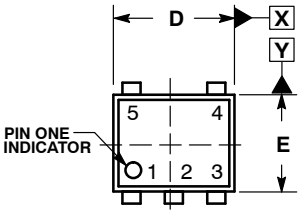


TOP VIEW

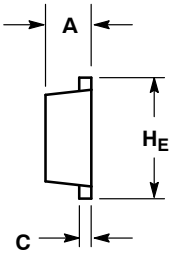


SIDE VIEW

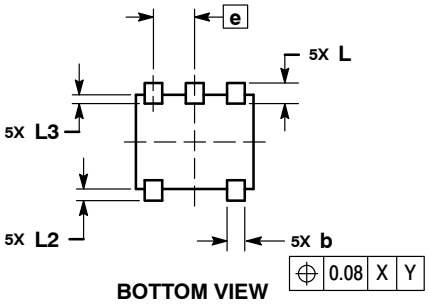


BOTTOM VIEW

NOTES:
1. DIMENSIONING AND TOLERANCING PER ASME Y14.5M, 1994.
2. CONTROLLING DIMENSION: MILLIMETERS
3. MAXIMUM LEAD THICKNESS INCLUDES LEAD FINISH. MINIMUM LEAD THICKNESS IS THE MINIMUM THICKNESS OF THE BASE MATERIAL.
4. DIMENSIONS D AND E DO NOT INCLUDE MOLD FLASH, PROTRUSIONS, OR GATE BURRS.

| | MILLIMETERS | | |
|---|---|---|---|
| DIM | MIN | NOM | MAX |
| A | 0.34 | 0.37 | 0.40 |
| b | 0.10 | 0.15 | 0.20 |
| C | 0.07 | 0.12 | 0.17 |
| D | 0.95 | 1.00 | 1.05 |
| E | 0.75 | 0.80 | 0.85 |
| e | 0.35 BSC | | |
| HE | 0.95 | 1.00 | 1.05 |
| L | 0.175 REF | | |
| L2 | 0.05 | 0.10 | 0.15 |
| L3 | −−− | −−− | 0.15 |

### SOLDERING FOOTPRINT*

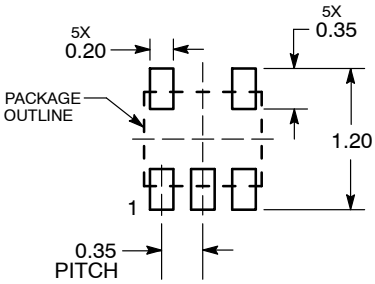


DIMENSIONS: MILLIMETERS

*For additional information on our Pb−Free strategy and soldering details, please download the ON Semiconductor Soldering and Mounting Techniques Reference Manual, SOLDERRM/D.

ON Semiconductor and ON are trademarks of Semiconductor Components Industries, LLC dba ON Semiconductor or its subsidiaries in the United States and/or other countries. ON Semiconductor owns the rights to a number of patents, trademarks, copyrights, trade secrets, and other intellectual property. A listing of ON Semiconductor's product/patent coverage may be accessed at www.onsemi.com/site/pdf/Patent−Marking.pdf. ON Semiconductor reserves the right to make changes without further notice to any products herein. ON Semiconductor makes no warranty, representation or guarantee regarding the suitability of its products for any particular purpose, nor does ON Semiconductor assume any liability arising out of the application or use of any product or circuit, and specifically disclaims any and all liability, including without limitation special, consequential or incidental damages. Buyer is responsible for its products and applications using ON Semiconductor products, including compliance with all laws, regulations and safety requirements or standards, regardless of any support or applications information provided by ON Semiconductor. "Typical" parameters which may be provided in ON Semiconductor data sheets and/or specifications can and do vary in different applications and actual performance may vary over time. All operating parameters, including "Typicals" must be validated for each customer application by customer's technical experts. ON Semiconductor does not convey any license under its patent rights nor the rights of others. ON Semiconductor products are not designed, intended, or authorized for use as a critical component in life support systems or any FDA Class 3 medical devices or medical devices with a same or similar classification in a foreign jurisdiction or any devices intended for implantation in the human body. Should Buyer purchase or use ON Semiconductor products for any such unintended or unauthorized application, Buyer shall indemnify and hold ON Semiconductor and its officers, employees, subsidiaries, affiliates, and distributors harmless against all claims, costs, damages, and expenses, and reasonable attorney fees arising out of, directly or indirectly, any claim of personal injury or death associated with such unintended or unauthorized use, even if such claim alleges that ON Semiconductor was negligent regarding the design or manufacture of the part. ON Semiconductor is an Equal Opportunity/Affirmative Action Employer. This literature is subject to all applicable copyright laws and is not for resale in any manner.

### PUBLICATION ORDERING INFORMATION

**LITERATURE FULFILLMENT:**
**Email Requests to:** orderlit@onsemi.com

**ON Semiconductor Website:** www.onsemi.com

**TECHNICAL SUPPORT**
**North American Technical Support:**
Voice Mail: 1 800−282−9855 Toll Free USA/Canada
Phone: 011 421 33 790 2910

**Europe, Middle East and Africa Technical Support:**
Phone: 00421 33 790 2910
For additional information, please contact your local Sales Representative

◊

Downloaded from Arrow.com.