XLamp® CHA0304 Pro9™ LED

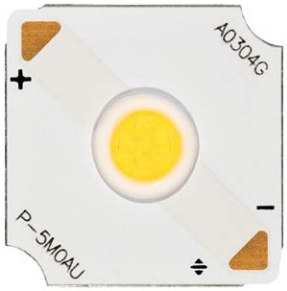

PRODUCT DESCRIPTION

The XLamp® CHA LED family delivers an industry-leading combination of lumen density and efficacy in LES sizes as small as 3.3 mm. CHA family LEDs deliver 50% higher lumen density than the existing XLamp CMU family LEDs for significant improvements in beam angle and intensity. The XLamp CHA family LEDs are also compatible with the available ecosystem of holders and optics designed for high-intensity COBs.

Pro9™ version LEDs deliver up to 15% higher efficacy for 90 and 95 color rendering index (CRI) over standard version LEDs without sacrificing color rendering quality. Pro9 LEDs feature the industry's highest operating temperature rating of 105 °C and the same maximum current as the standard versions. In addition, all Pro9 LEDs share the same mechanical and electrical characteristics as the standard versions.

XLamp CHA LEDs are optimized for premium indoor lighting applications, including track, spot and downlight, as well as outdoor lighting.

FEATURES

- 3.3-mm optical source
- Available in 90 and 95 CRI minimum options
- EasyWhite® 2- and 3-step binning, available in Standard (on BBL), Premium and Below BBL color options
- Forward voltage option: 21-V class
- 85 °C binning and characterization
- Maximum drive current: 300 mA
- 114° viewing angle, uniform chromaticity profile
- Top-side solder connections
- RoHS and REACH compliant
- UL® recognized component (E349212)

TABLE OF CONTENTS

Characteristics 2
Operating Limits 2
Flux Characteristics, Order Codes & Bins 3
Flux Characteristics, Order Codes & Bins, Premium Color 4
Relative Spectral Power Distribution 5
Relative Spectral Power Distribution, Premium Color 6
Electrical Characteristics 7
Relative Luminous Flux 8
Typical Spatial Distribution 8
Relative Chromaticity vs. Current and Temperature, Below BBL 9
EasyWhite® Performance Groups - Chromaticity 13
Premium Color Performance Groups - Chromaticity 14
EasyWhite® Bins Plotted on the 1931 CIE Color Space 16
Premium Color Bins Plotted on the 1931 CIE Color Space 17
Bin and Order Code Formats 18
Mechanical Dimensions 19
Thermal Design 20
Notes 21
Packaging 23

Cree LED / 4001 E. Hwy. 54, Suite 2000 / Durham, NC 27713 USA / +1.919.313.5330 / www.cree-led.com

© 2023-2026 Cree LED. The information in this document is subject to change without notice. Cree®, the Cree logo, XLamp®, EasyWhite®, and the Cree LED logo are registered trademarks, and Pro9 is a trademark, of Cree LED. UL® and the UL logo are registered trademarks of UL LLC.

Downloaded from Arrow.com.

CHARACTERISTICS

Characteristics	Unit	Minimum	Typical	Maximum
Viewing angle (FWHM)	degrees		114	
ESD withstand voltage (JEDEC JS-001-2012)	V		Class 3A	
DC forward current	mA			300*
Reverse current	mA			0.1
Forward voltage (@ 175 mA, 85 °C)	V		21.0	22.8

* Refer to the Operating Limits section.

OPERATING LIMITS

The maximum current rating of the CHA0304 Pro9 LED depends on the case temperature (Tc) when the LED has reached thermal equilibrium under steady-state operation. The graph shown below assumes that the system design employs good thermal management (thermal interface material and heat sink) and may vary when poor thermal management is employed. Either solder pad shown in the Mechanical Dimensions section on page 19 can be used as the Tc measurement point.

Another important factor in good thermal management is the temperature of the Light Emitting Surface (LES). Cree LED recommends a maximum LES temperature of 140 °C to ensure optimal LED lifetime. Please refer to the Thermal Design section on page 20 for more information on LES temperature measurement.

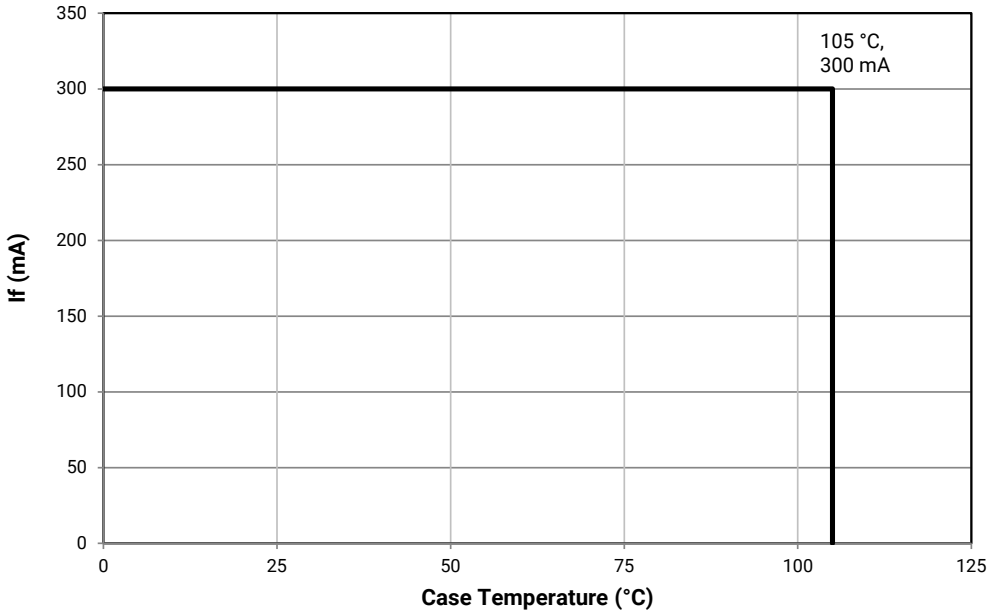

© 2023-2026 Cree LED. The information in this document is subject to change without notice. Cree®, the Cree logo, XLamp®, EasyWhite®, and the Cree LED logo are registered trademarks, and Pro9 is a trademark, of Cree LED. UL® and the UL logo are registered trademarks of UL LLC.

Downloaded from Arrow.com.

FLUX CHARACTERISTICS, ORDER CODES & BINS (I_F = 175 mA, T_J = 85 °C)

The following tables provide order codes for XLamp CHA0304 Pro9 LEDs. For a complete description of the order code nomenclature, please see the Bin and Order Code Formats section (page 18).

Nominal CCT	CRI		Minimum Luminous Flux (lm)	Typical Luminous Flux (lm)	2-Step		3-Step	
	Min.	Typ			Group	Order Code	Group	Order Code
4000 K	90	92	457	491	40H	CHA0304-0000-00PG0U0A40H	40G	CHA0304-0000-00PG0U0A40G
	95	98	432	465	40H	CHA0304-0000-00PG0Z0A40H		
3500 K	90	92	446	480	35H	CHA0304-0000-00PG0U0A35H	35G	CHA0304-0000-00PG0U0A35G
	95	98	446	479	35H	CHA0304-0000-00PG0Z0A35H		
3000 K	90	92	428	460	30H	CHA0304-0000-00PG0U0A30H	30G	CHA0304-0000-00PG0U0A30G
	95	98	407	437	30H	CHA0304-0000-00PG0Z0A30H		
2700 K	90	92	405	435	27H	CHA0304-0000-00PG0U0A27H	27G	CHA0304-0000-00PG0U0A27G
	95	98	387	416	27H	CHA0304-0000-00PG0Z0A27H		
2400 K	90	92	370	398	24H	CHA0304-0000-00PG0U0A24H	24G	CHA0304-0000-00PG0U0A24G
	95	98	354	380	24H	CHA0304-0000-00PG0Z0A24H		
2200 K	90	92	344	370	22H	CHA0304-0000-00PG0U0A22H	22G	CHA0304-0000-00PG0U0A22G

Notes
- Cree LED maintains a tolerance of ±7% on flux and power measurements, ±0.005 on chromaticity (CCx, CCy) measurements and a tolerance of ±2 on CRI measurements. See the Measurements section (page 21).
- For 90 CRI minimum LEDs, CRI R9 typical is 60.

© 2023-2026 Cree LED. The information in this document is subject to change without notice. Cree®, the Cree logo, XLamp®, EasyWhite®, and the Cree LED logo are registered trademarks, and Pro9 is a trademark, of Cree LED. UL® and the UL logo are registered trademarks of UL LLC.

Downloaded from Arrow.com.

FLUX CHARACTERISTICS, ORDER CODES & BINS, PREMIUM COLOR (I_F = 175 mA, T_J = 85 °C)

Below BBL

Nominal CCT	CRI		Minimum Luminous Flux (lm)	Typical Luminous Flux (lm)	2-Step		3-Step	
	Min.	Typ			Group	Order Code	Group	Order Code
4000 K	90	92	434	466	5PP	CHA0304-0000-00PG0U0A5PP	5PQ	CHA0304-0000-00PG0U0A5PQ
	95	98	407	437	5PP	CHA0304-0000-00PG0Z0A5PP		
3500 K	90	92	433	466	6PP	CHA0304-0000-00PG0U0A6PP	6PQ	CHA0304-0000-00PG0U0A6PQ
	95	98	396	426	6PP	CHA0304-0000-00PG0Z0A6PP		
3000 K	90	92	424	455	7PP	CHA0304-0000-00PG0U0A7PP	7PQ	CHA0304-0000-00PG0U0A7PQ
	95	98	378	406	7PP	CHA0304-0000-00PG0Z0A7PP		
2700 K	90	92	401	431	8PP	CHA0304-0000-00PG0U0A8PP	8PQ	CHA0304-0000-00PG0U0A8PQ
	95	98	356	383	8PP	CHA0304-0000-00PG0Z0A8PP		

Specialty

Nominal CCT	CRI		Minimum Luminous Flux (lm)	Typical Luminous Flux (lm)	3-Step			
	Min.	Typ			Group	Order Code	Group	Order Code
3100 K	90	92	401	431	31Q	CHA0304-0000-00PG0U0A31Q		
3000 K	90	92	394	424			30U	CHA0304-0000-00PG0U0A30U
			411	442	30Q	CHA0304-0000-00PG0U0A30Q		

Notes

- Cree LED maintains a tolerance of ±7% on flux and power measurements, ±0.005 on chromaticity (CCx, CCy) measurements and a tolerance of ±2 on CRI measurements. See the Measurements section (page 21).
- For 90 CRI minimum LEDs, CRI R9 typical is 60.

© 2023-2026 Cree LED. The information in this document is subject to change without notice. Cree®, the Cree logo, XLamp®, EasyWhite®, and the Cree LED logo are registered trademarks, and Pro9 is a trademark, of Cree LED. UL® and the UL logo are registered trademarks of UL LLC.

Downloaded from Arrow.com.

RELATIVE SPECTRAL POWER DISTRIBUTION

The following graphs are the result of a series of pulsed measurements at 175 mA and T_J = 85 °C.

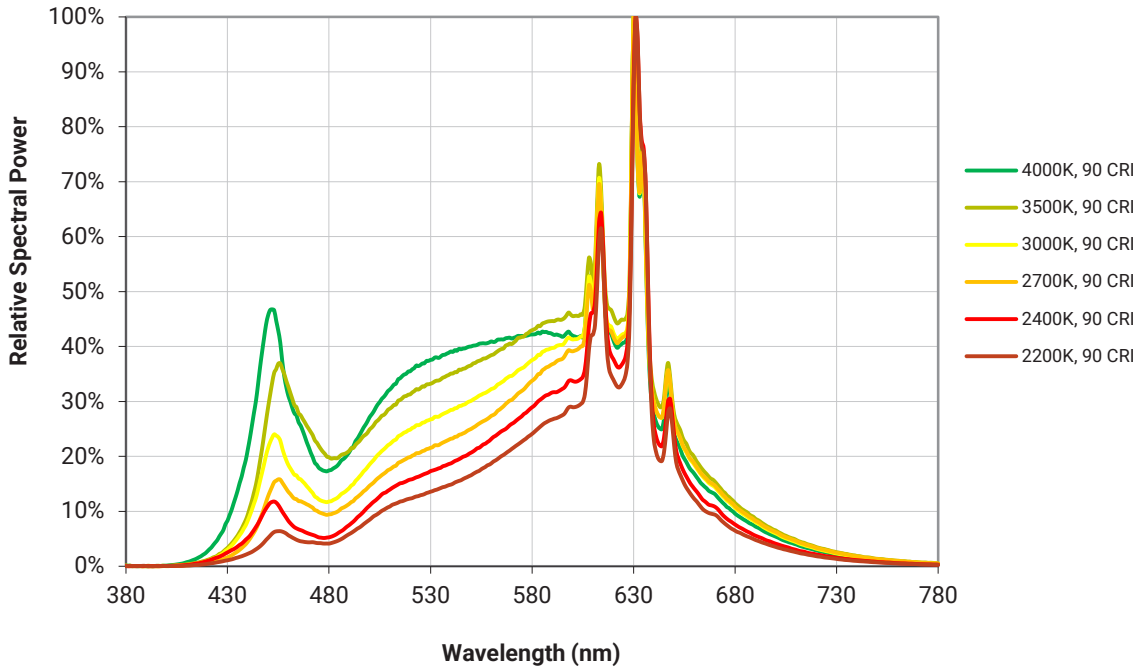

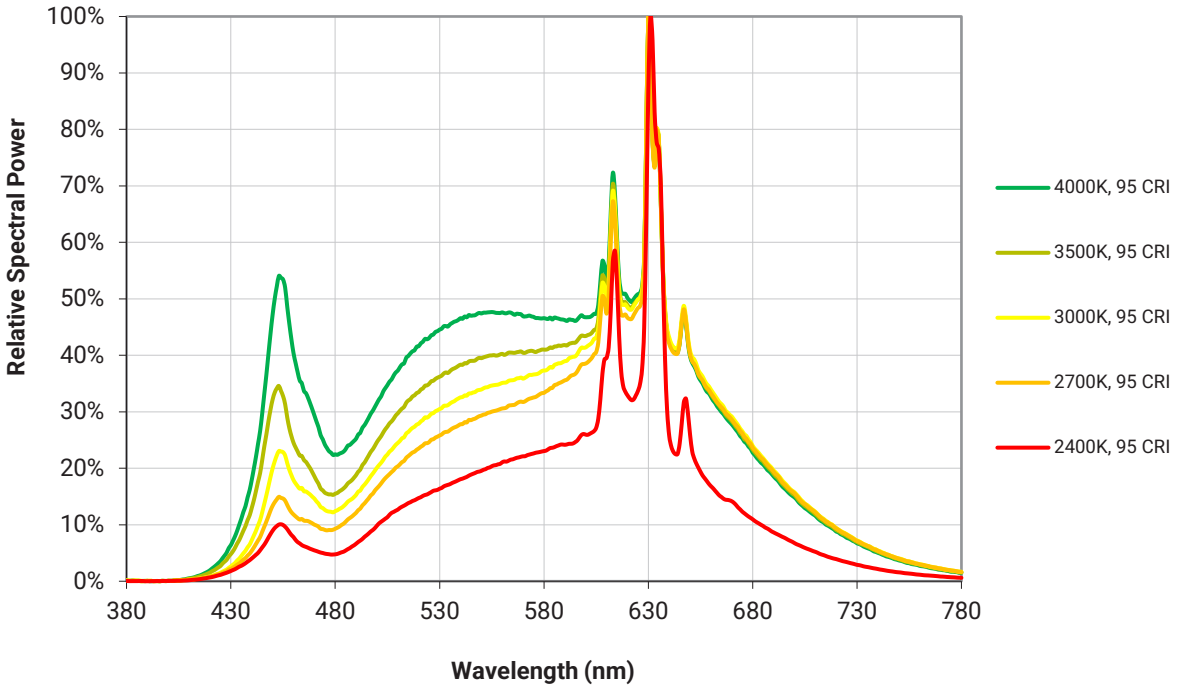

© 2023-2026 Cree LED. The information in this document is subject to change without notice. Cree®, the Cree logo, XLamp®, EasyWhite®, and the Cree LED logo are registered trademarks, and Pro9 is a trademark, of Cree LED. UL® and the UL logo are registered trademarks of UL LLC.

Downloaded from Arrow.com.

RELATIVE SPECTRAL POWER DISTRIBUTION, PREMIUM COLOR

The following graph is the result of a series of pulsed measurements at 700 mA and T_J = 85 °C.

Specialty

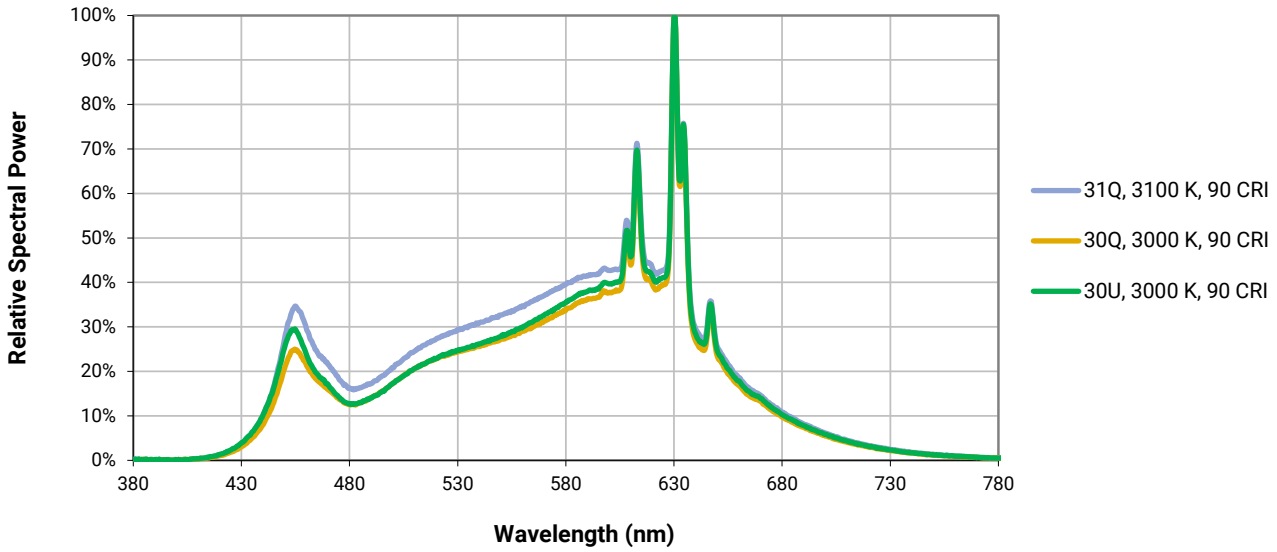

© 2023-2026 Cree LED. The information in this document is subject to change without notice. Cree®, the Cree logo, XLamp®, EasyWhite®, and the Cree LED logo are registered trademarks, and Pro9 is a trademark, of Cree LED. UL® and the UL logo are registered trademarks of UL LLC.

Downloaded from Arrow.com.

ELECTRICAL CHARACTERISTICS

The following graph is the result of a series of steady-state measurements.

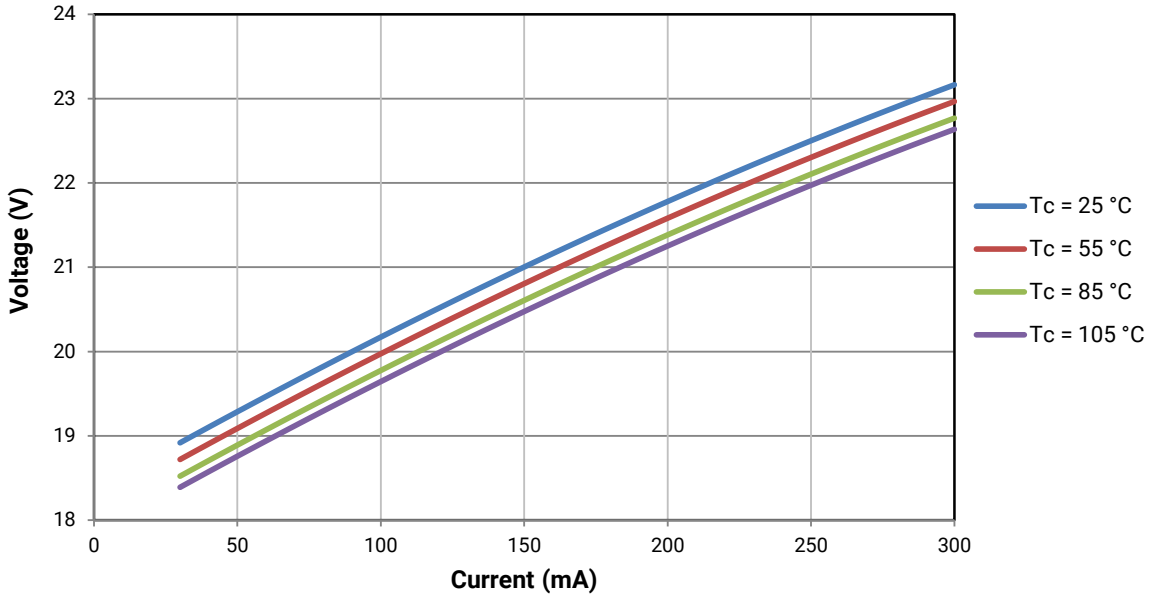

© 2023-2026 Cree LED. The information in this document is subject to change without notice. Cree®, the Cree logo, XLamp®, EasyWhite®, and the Cree LED logo are registered trademarks, and Pro9 is a trademark, of Cree LED. UL® and the UL logo are registered trademarks of UL LLC.

Downloaded from Arrow.com.

RELATIVE LUMINOUS FLUX

The relative luminous flux values provided below are the ratio of:

- Measurements of the CHA0304 Pro9 LED at steady-state operation at the given conditions, divided by
- Flux measured during binning, which is a pulsed measurement at 175 mA at T_J = 85 °C.

For example, at steady-state operation of Tc = 25 °C, I_F = 200 mA, the relative luminous flux ratio is 125% in the chart below. A CHA0304 Pro9 LED that measures 400 lm during binning will deliver 500 lm (400 * 1.25) at steady-state operation of Tc = 25 °C, I_F = 200 mA.

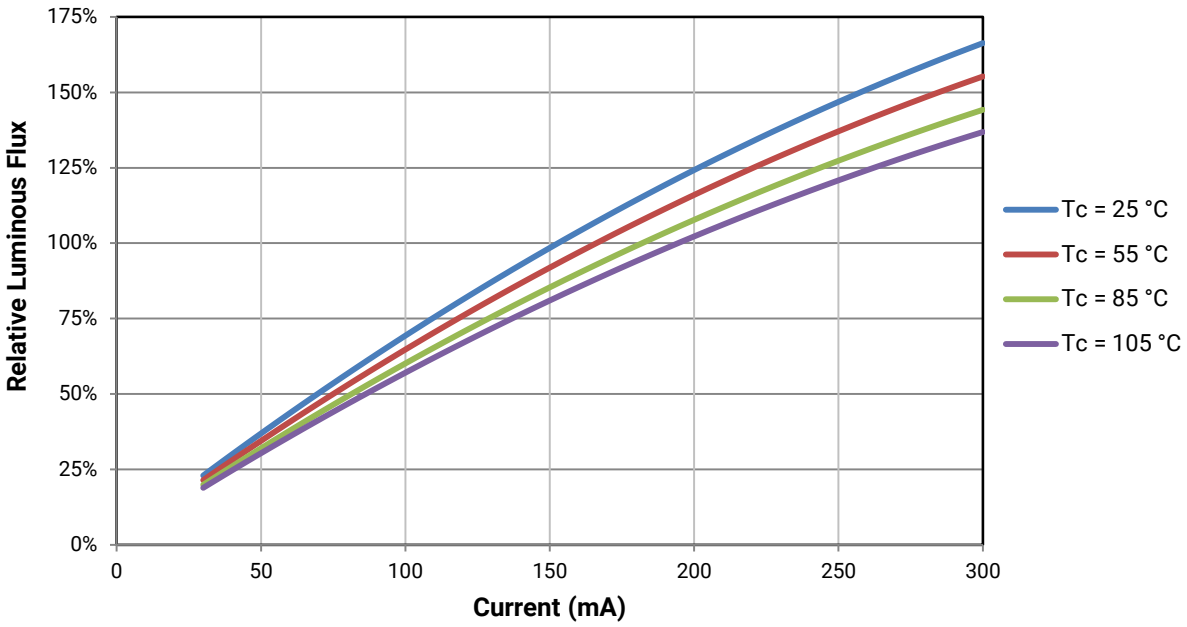

TYPICAL SPATIAL DISTRIBUTION

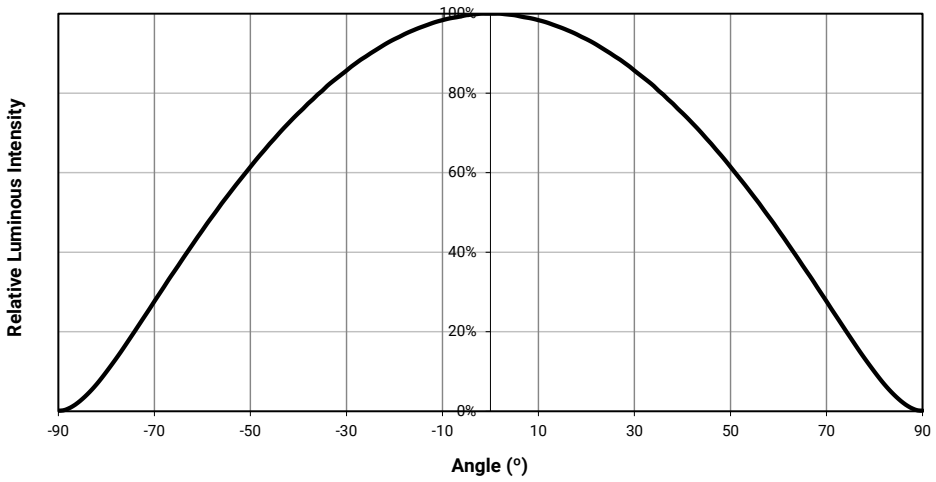

© 2023-2026 Cree LED. The information in this document is subject to change without notice. Cree®, the Cree logo, XLamp®, EasyWhite®, and the Cree LED logo are registered trademarks, and Pro9 is a trademark, of Cree LED. UL® and the UL logo are registered trademarks of UL LLC.

Downloaded from Arrow.com.

RELATIVE CHROMATICITY VS. CURRENT AND TEMPERATURE, BELOW BBL

The following graphs are the result of a series of steady-state measurements. Chromaticity is shown relative to the chromaticity measured at binning, which is a pulsed measurement at T_J = 85 °C.

4000 K, 90 CRI

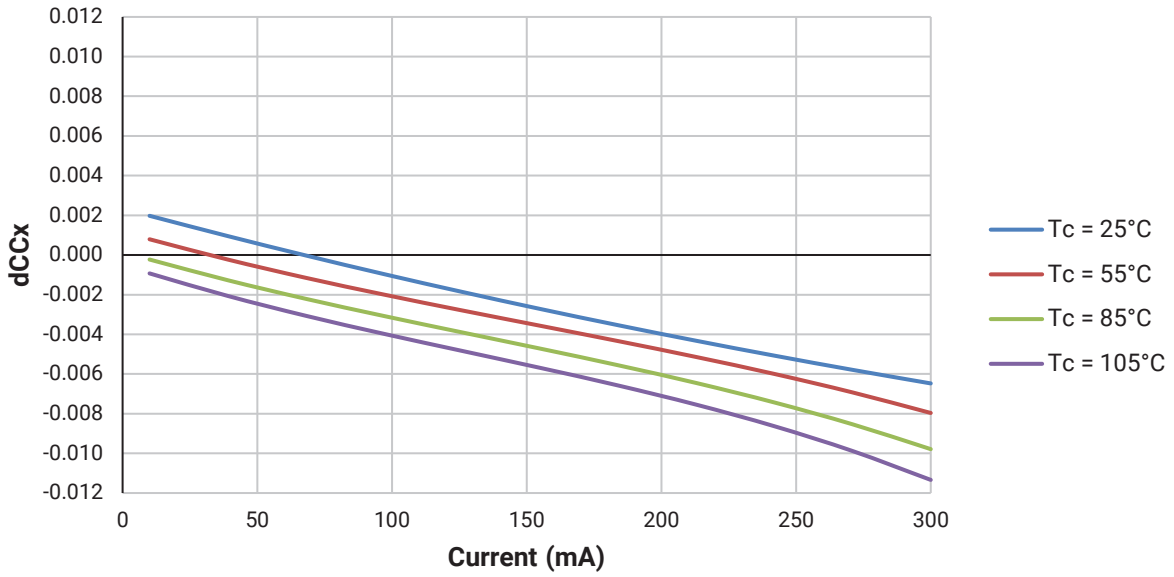

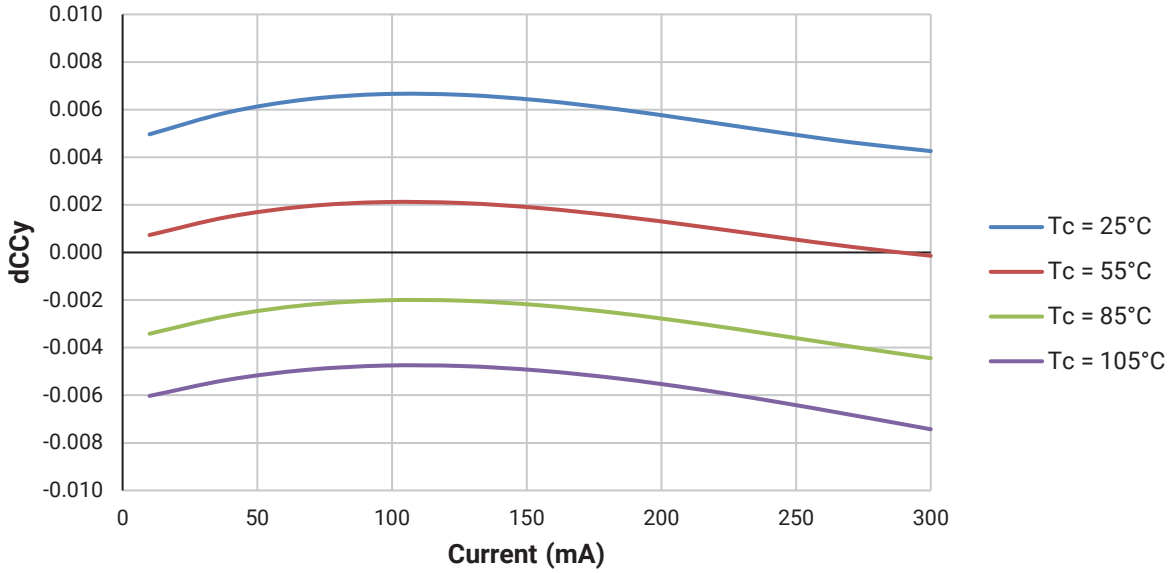

- Relative Chromaticity versus Current and Temperature are shown for reference only. These graphs are not a specification.

© 2023-2026 Cree LED. The information in this document is subject to change without notice. Cree®, the Cree logo, XLamp®, EasyWhite®, and the Cree LED logo are registered trademarks, and Pro9 is a trademark, of Cree LED. UL® and the UL logo are registered trademarks of UL LLC.

Downloaded from Arrow.com.

RELATIVE CHROMATICITY VS. CURRENT AND TEMPERATURE, BELOW BBL - CONTINUED

3000 K, 90 CRI

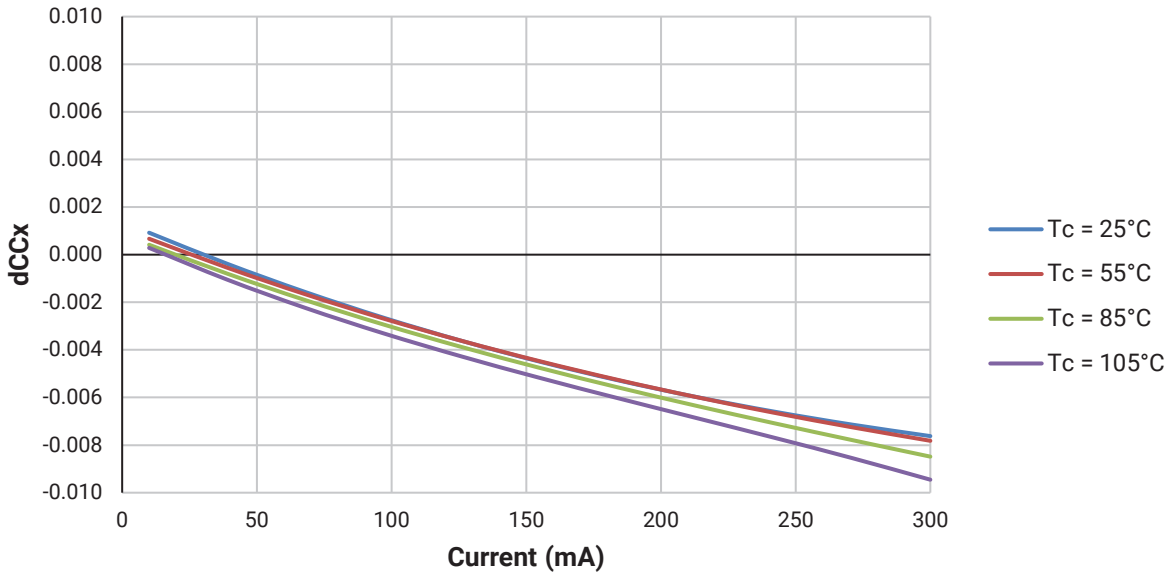

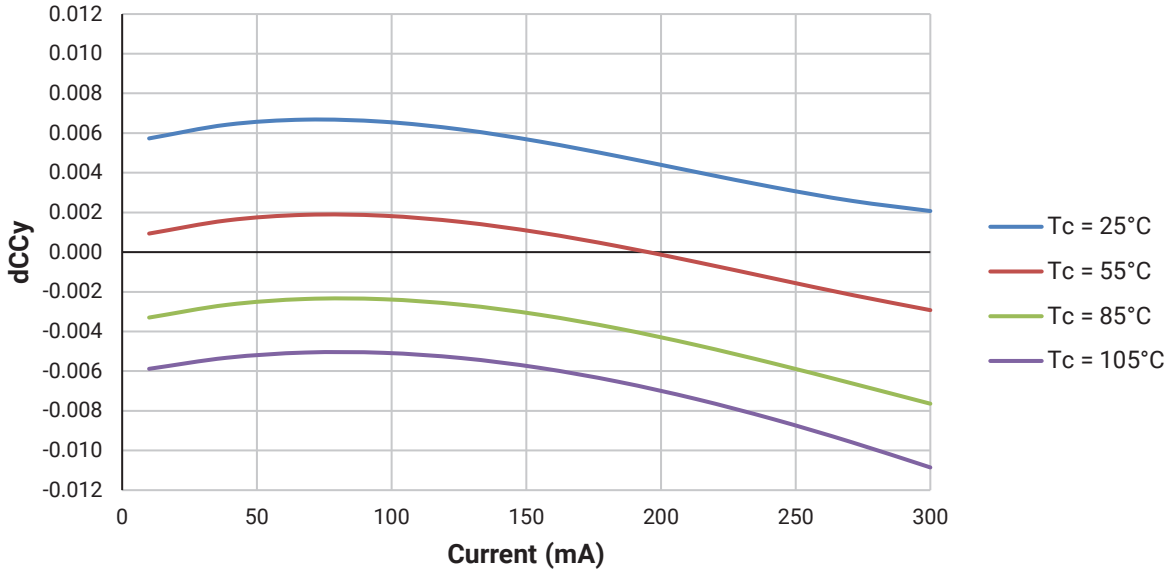

- Relative Chromaticity versus Current and Temperature are shown for reference only. These graphs are not a specification.

© 2023-2026 Cree LED. The information in this document is subject to change without notice. Cree®, the Cree logo, XLamp®, EasyWhite®, and the Cree LED logo are registered trademarks, and Pro9 is a trademark, of Cree LED. UL® and the UL logo are registered trademarks of UL LLC.

Downloaded from Arrow.com.

RELATIVE CHROMATICITY VS. CURRENT AND TEMPERATURE, BELOW BBL - CONTINUED

4000 K, 95 CRI

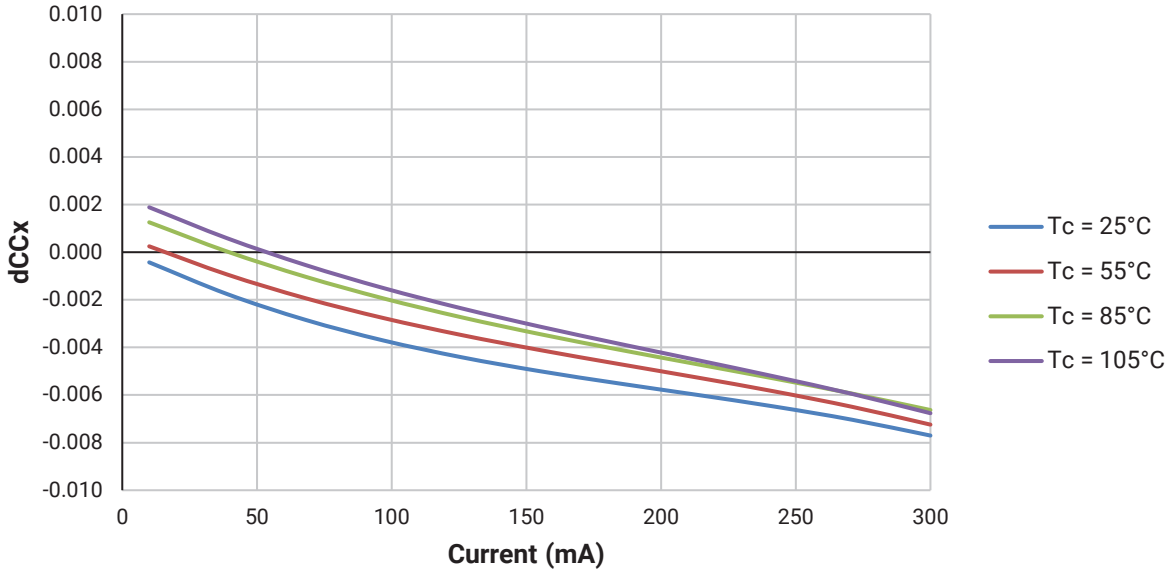

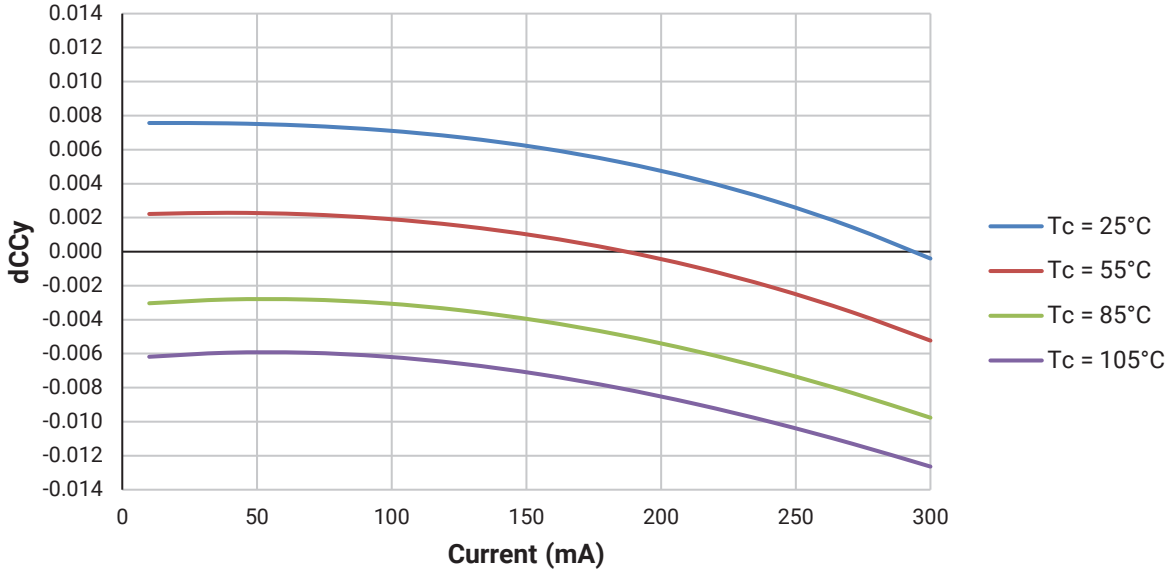

- Relative Chromaticity versus Current and Temperature are shown for reference only. These graphs are not a specification.

© 2023-2026 Cree LED. The information in this document is subject to change without notice. Cree®, the Cree logo, XLamp®, EasyWhite®, and the Cree LED logo are registered trademarks, and Pro9 is a trademark, of Cree LED. UL® and the UL logo are registered trademarks of UL LLC.

Downloaded from Arrow.com.

RELATIVE CHROMATICITY VS. CURRENT AND TEMPERATURE, BELOW BBL - CONTINUED

3000 K, 95 CRI

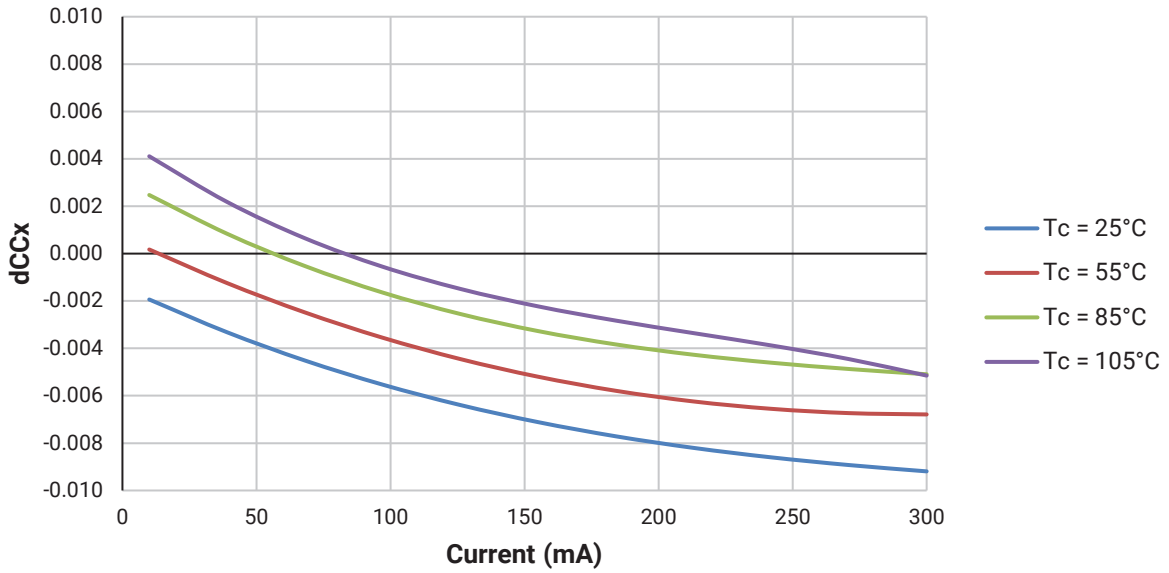

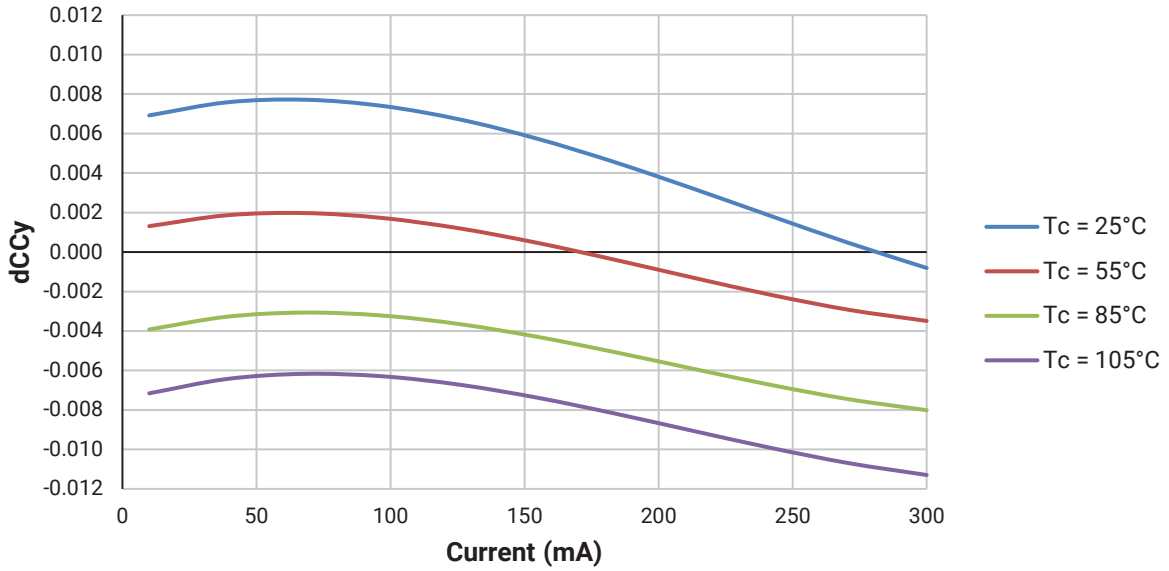

- Relative Chromaticity versus Current and Temperature are shown for reference only. These graphs are not a specification.

© 2023-2026 Cree LED. The information in this document is subject to change without notice. Cree®, the Cree logo, XLamp®, EasyWhite®, and the Cree LED logo are registered trademarks, and Pro9 is a trademark, of Cree LED. UL® and the UL logo are registered trademarks of UL LLC.

Downloaded from Arrow.com.

EASYWHITE® PERFORMANCE GROUPS - CHROMATICITY (T_J = 85 °C)

XLamp CHA0304 Pro9 LEDs are tested for chromaticity and placed into one of the regions defined by the following bounding coordinates.

EasyWhite Color Temperatures – 2-Step			
Code	CCT	x	y
40H	4000 K	0.3777	0.3739
		0.3797	0.3816
		0.3861	0.3855
		0.3838	0.3777
35H	3500 K	0.4022	0.3858
		0.4053	0.3942
		0.4125	0.3977
		0.4091	0.3891
30H	3000 K	0.4287	0.3975
		0.4328	0.4064
		0.4390	0.4086
		0.4347	0.3996
27H	2700 K	0.4524	0.4048
		0.4574	0.4140
		0.4633	0.4154
		0.4581	0.4062
24H	2400 K	0.4863	0.4110
		0.4914	0.4191
		0.4859	0.4185
		0.4809	0.4103
22H	2200 K	0.5004	0.4112
		0.5068	0.4206
		0.5128	0.4204
		0.5063	0.4110

EasyWhite Color Temperatures – 3-Step Ellipse						
Bin Code	CCT	Center Point		Major Axis	Minor Axis	Rotation Angle (°)
		x	y	a	b	
40G	4000 K	0.3818	0.3797	0.00939	0.00402	53.7
35G	3500 K	0.4073	0.3917	0.00927	0.00414	54.0
30G	3000 K	0.4338	0.4030	0.00834	0.00408	53.2
27G	2700 K	0.4577	0.4099	0.00834	0.00420	48.5
24G	2400 K	0.4861	0.4147	0.0085	0.00403	49.6
22G	2200 K	0.5066	0.4158	0.00980	0.00480	45.5

© 2023-2026 Cree LED. The information in this document is subject to change without notice. Cree®, the Cree logo, XLamp®, EasyWhite®, and the Cree LED logo are registered trademarks, and Pro9 is a trademark, of Cree LED. UL® and the UL logo are registered trademarks of UL LLC.

Downloaded from Arrow.com.

PREMIUM COLOR PERFORMANCE GROUPS - CHROMATICITY (T_J = 85 °C)

XLamp CHA0304 Pro9 LEDs are tested for chromaticity and placed into one of the regions defined by the following bounding coordinates.

Below BBL

EasyWhite Color Temperatures – 2-Step			
Code	CCT	x	y
5PP	4000 K	0.3735	0.3616
		0.3754	0.3689
		0.3826	0.3732
		0.3804	0.3658
6PP	3500 K	0.3979	0.3771
		0.4008	0.3852
		0.4079	0.3886
		0.4046	0.3803
7PP	3000 K	0.4289	0.3892
		0.4329	0.3979
		0.4390	0.4000
		0.4348	0.3913
8PP	2700 K	0.4525	0.3967
		0.4573	0.4057
		0.4632	0.4071
		0.4582	0.3981

EasyWhite Color Temperatures – 3-Step Ellipse						
Bin Code	CCT	Center Point		Major Axis	Minor Axis	Rotation Angle (°)
		x	y	a	b	
5PQ	4000 K	0.3785	0.3677	0.00939	0.00402	53.7
6PQ	3500 K	0.4028	0.3828	0.00927	0.00414	54
7PQ	3000 K	0.4339	0.3946	0.00834	0.00408	53.2
8PQ	2700 K	0.4578	0.4019	0.00834	0.0042	48.5

© 2023-2026 Cree LED. The information in this document is subject to change without notice. Cree®, the Cree logo, XLamp®, EasyWhite®, and the Cree LED logo are registered trademarks, and Pro9 is a trademark, of Cree LED. UL® and the UL logo are registered trademarks of UL LLC.

Downloaded from Arrow.com.

PREMIUM COLOR PERFORMANCE GROUPS - CHROMATICITY (T_J = 85 °C) - CONTINUED

XLamp CHA0304 Pro9 LEDs are tested for chromaticity and placed into one of the regions defined by the following bounding coordinates.

Specialty

EasyWhite Color Temperatures – 3-Step Ellipse						
Bin Code	CCT	Center Point		Major Axis	Minor Axis	Rotation Angle (°)
		x	y	a	b	
31Q	3100 K	0.4236	0.3888	0.00848	0.00455	50.3
30Q	3000 K	0.4305	0.3935	0.00834	0.00408	53.2
30U	3000 K	0.4274	0.3837	0.00834	0.00408	53.2

© 2023-2026 Cree LED. The information in this document is subject to change without notice. Cree®, the Cree logo, XLamp®, EasyWhite®, and the Cree LED logo are registered trademarks, and Pro9 is a trademark, of Cree LED. UL® and the UL logo are registered trademarks of UL LLC.

Downloaded from Arrow.com.

EASYWHITE® BINS PLOTTED ON THE 1931 CIE COLOR SPACE (T_J = 85 °C)

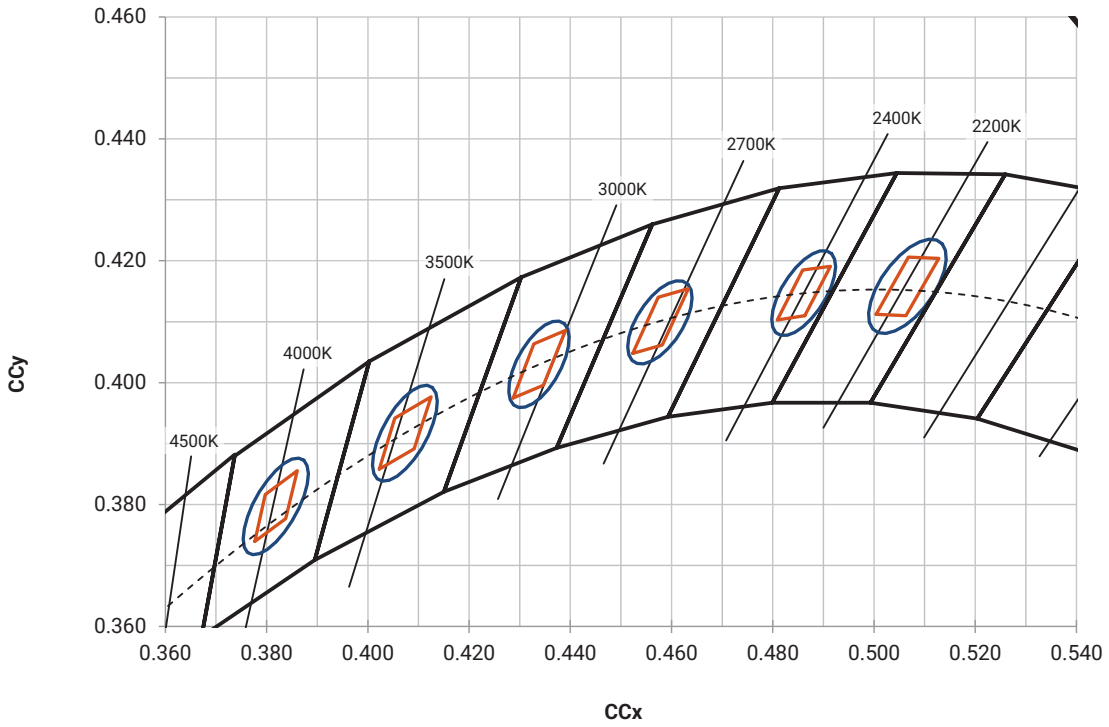

© 2023-2026 Cree LED. The information in this document is subject to change without notice. Cree®, the Cree logo, XLamp®, EasyWhite®, and the Cree LED logo are registered trademarks, and Pro9 is a trademark, of Cree LED. UL® and the UL logo are registered trademarks of UL LLC.

Downloaded from Arrow.com.

PREMIUM COLOR BINS PLOTTED ON THE 1931 CIE COLOR SPACE (T_J = 85 °C)

Below BBL

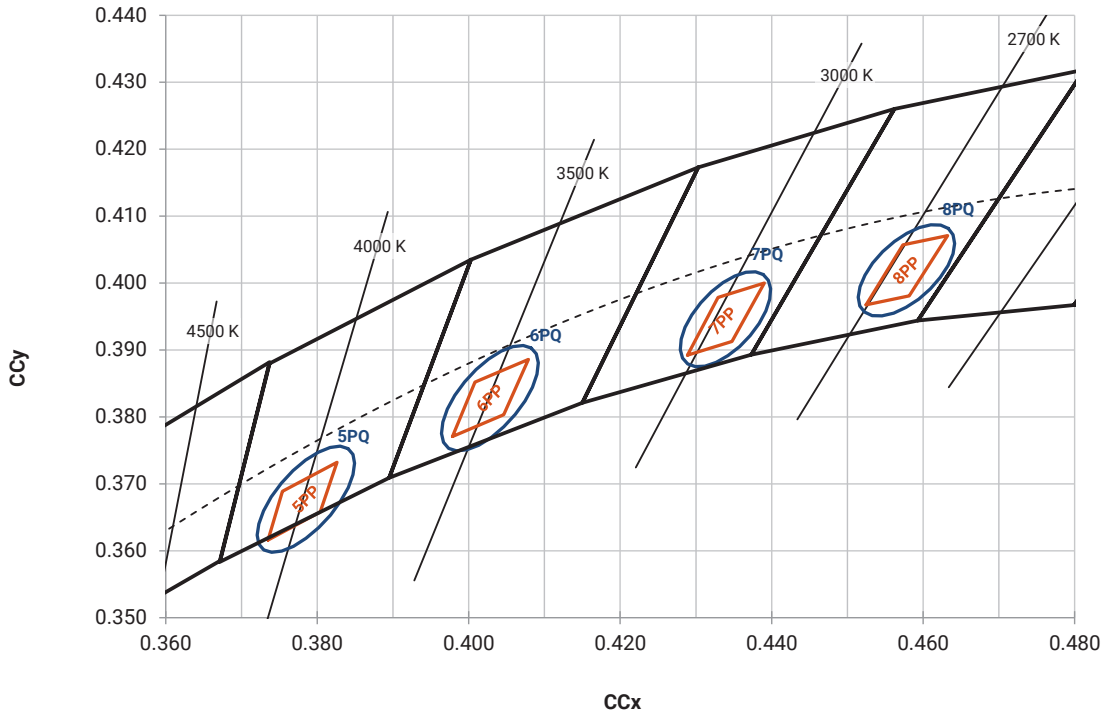

Specialty (3-step)

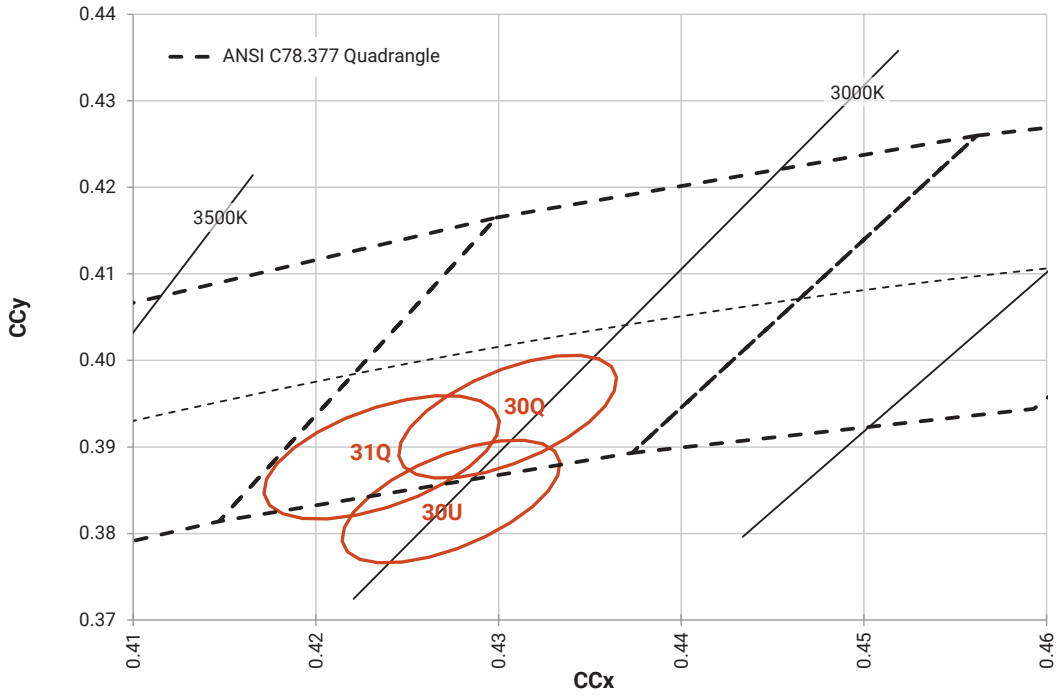

© 2023-2026 Cree LED. The information in this document is subject to change without notice. Cree®, the Cree logo, XLamp®, EasyWhite®, and the Cree LED logo are registered trademarks, and Pro9 is a trademark, of Cree LED. UL® and the UL logo are registered trademarks of UL LLC.

Downloaded from Arrow.com.

BIN AND ORDER CODE FORMATS

Bin codes and order codes are configured as follows:

Order Code

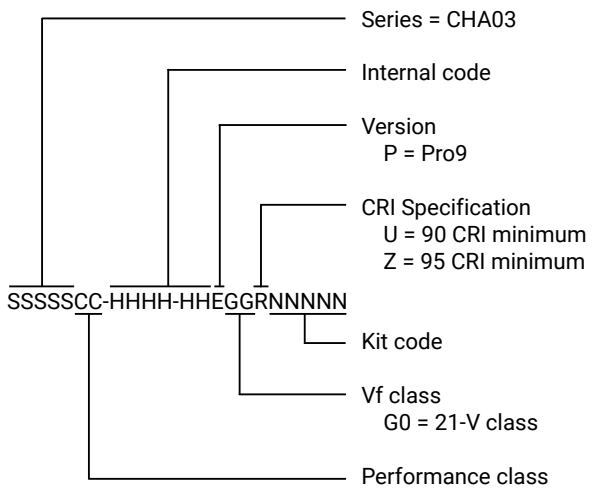

Bin Code

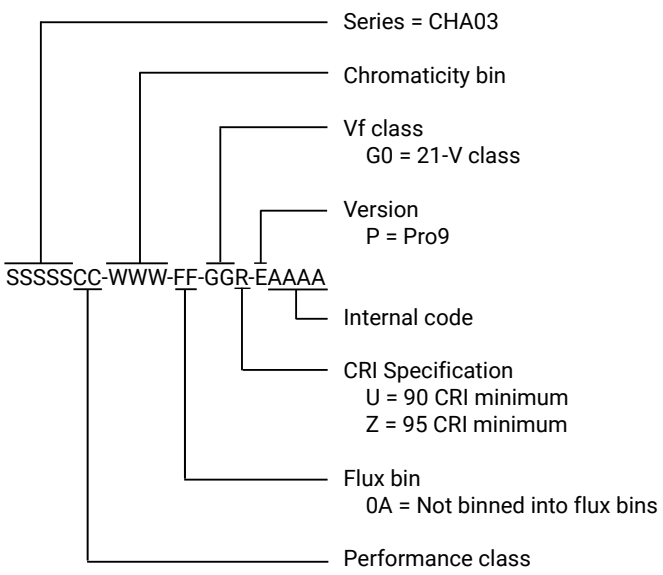

© 2023-2026 Cree LED. The information in this document is subject to change without notice. Cree®, the Cree logo, XLamp®, EasyWhite®, and the Cree LED logo are registered trademarks, and Pro9 is a trademark, of Cree LED. UL® and the UL logo are registered trademarks of UL LLC.

Downloaded from Arrow.com.

MECHANICAL DIMENSIONS

Dimensions are in mm.

Tolerances unless otherwise specified: ±.13

x° ± 1°

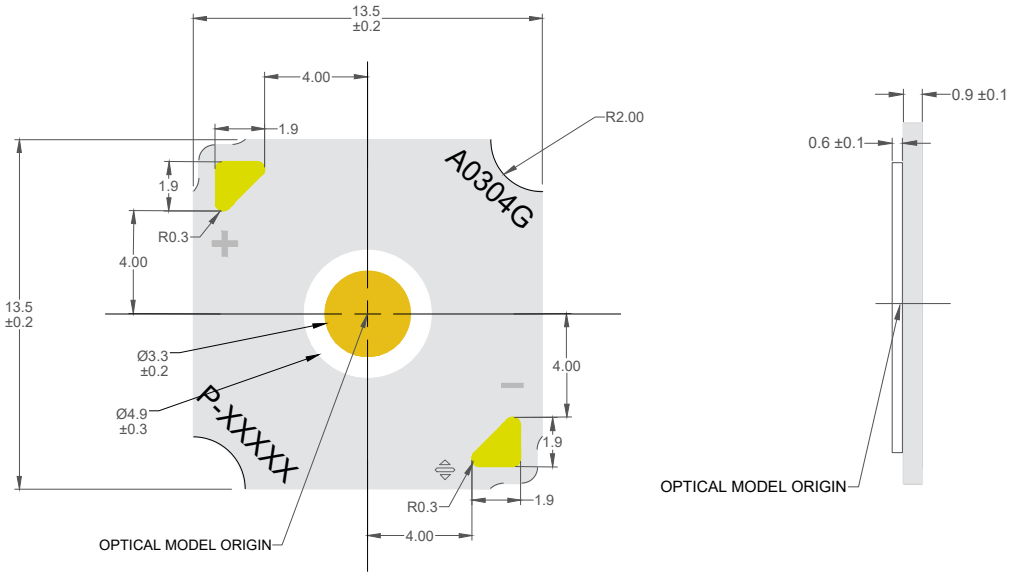

Meaning of LED marking

A0304G = 21-V CHA0304 Pro9

P-X_1 X_2 X_3 X_4 X_5

X1 CCT

- 5 = 4000 K
- 6 = 3500 K
- 7 = 3000 K
- 8 = 2700 K
- 9 = 2400 K
- A = 2200 K

X2

- M = EasyWhite LED on the black-body line
- Q = Specialty & below the black-body line LED
- R = Below the black-body line LED (for 7PQ & 7PP)
- U = Specialty LED below the black-body line

X3 Flux bin

X4

- 0A = Not binned into flux bins

X5 CRI

- U = 90 CRI min
- Z = 95 CRI min

To assist in identifying the LED, CHA0304 Pro9 LEDs provide a 2D barcode, positioned on the back of the LED, as shown in the following diagram. For a complete description of the bar code format, please refer to the XLamp CHA Family LEDs soldering and handling document.

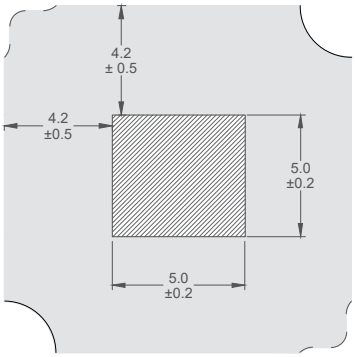

Tc measurement point: either the anode or cathode solder pad

© 2023-2026 Cree LED. The information in this document is subject to change without notice. Cree®, the Cree logo, XLamp®, EasyWhite®, and the Cree LED logo are registered trademarks, and Pro9 is a trademark, of Cree LED. UL® and the UL logo are registered trademarks of UL LLC.

Downloaded from Arrow.com.

THERMAL DESIGN

The CHA family of LED arrays can include over a hundred different LED die inside one package, and thus over a hundred different junction temperatures (T_J). Cree LED has intentionally removed junction-temperature-based operating limits and replaced the commonplace maximum T_J calculations with maximum ratings based on forward current (I_F) and case temperature (Tc). No additional calculations are required to ensure the CHA LED is being operated within its designed limits. LES temperature measurement provides additional verification of good thermal design. Please refer to page 2 for the Operating Limits specification.

There is no need to calculate for T_J inside the package, as the thermal management design process, specifically from solder point (T_{SP}) to ambient (T_a), remains identical to any other LED component. For more information on thermal management of XLamp LEDs, please refer to the Thermal Management application note. For CHA soldering recommendations and more information on thermal interface materials (TIM), LES temperature measurement, and connection methods, please refer to the XLamp CHA Family LEDs soldering and handling document.

To keep the CHA0304 Pro9 LED at or below the maximum rated Tc, the case to ambient temperature thermal resistance (R_c-a) must be at or below the maximum R_c-a value shown on the following graph, depending on the operating environment. The y-axis in the graph is a base 10 logarithmic scale.

As the figure at right shows, the R_c-a value is the sum of the thermal resistance of the TIM (R_tim) plus the thermal resistance of the heat sink (R_hs).

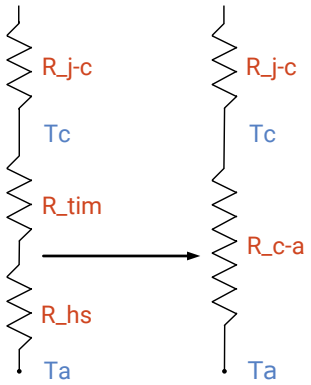

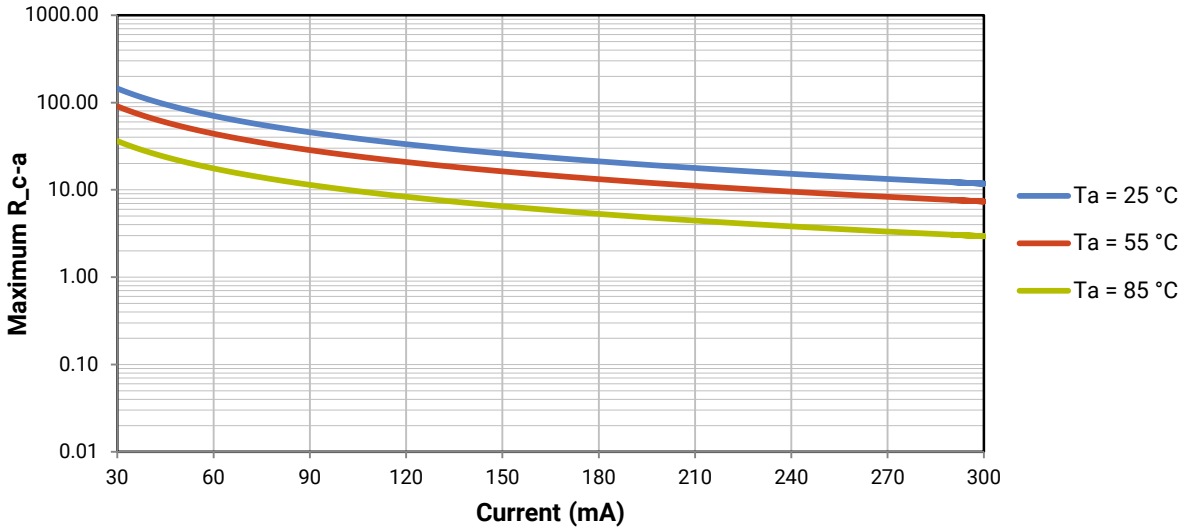

© 2023-2026 Cree LED. The information in this document is subject to change without notice. Cree®, the Cree logo, XLamp®, EasyWhite®, and the Cree LED logo are registered trademarks, and Pro9 is a trademark, of Cree LED. UL® and the UL logo are registered trademarks of UL LLC.

Downloaded from Arrow.com.

NOTES

LED Use

Use of this LED in information displays utilizing LCD Backlights and other emissive pixel display technology is prohibited ("Use Restrictions").

Measurements

The luminous flux, radiant power, chromaticity, forward voltage and CRI measurements in this document are binning specifications only and solely represent product measurements as of the date of shipment. These measurements will change over time based on a number of factors that are not within Cree LED's control and are not intended or provided as operational specifications for the products. Calculated values are provided for informational purposes only and are not intended or provided as specifications.

Pre-Release Qualification Testing

Please read the LED Reliability Overview for details of the qualification process Cree LED applies to ensure long-term reliability for XLamp LEDs and details of Cree LED's pre-release qualification testing for XLamp LEDs. Cree LED did not perform Room Temperature Operating Life (RTOL) testing on the CHA0304 Pro9 LED.

Lumen Maintenance

Cree LED now uses standardized IES LM-80-08 and TM-21-11 methods for collecting long-term data and extrapolating LED lumen maintenance. For information on the specific LM-80 data sets available for this LED, refer to the public LM-80 results document.

Please read the Long-Term Lumen Maintenance application note for more details on Cree LED's lumen maintenance testing and forecasting. Please read the Thermal Management application note for details on how thermal design, ambient temperature, and drive current affect the LED junction temperature.

RoHS Compliance

The levels of RoHS restricted materials in this product are below the maximum concentration values (also referred to as the threshold limits) permitted for such substances, or are used in an exempted application, in accordance with EU Directive 2011/65/EC (RoHS2), as implemented January 2, 2013. RoHS Declarations for this product can be obtained from your Cree LED representative or from the Product Ecology section of the Cree LED website.

REACH Compliance

REACH substances of very high concern (SVHCs) information is available for this product. Since the European Chemical Agency (ECHA) has published notice of their intent to frequently revise the SVHC listing for the foreseeable future, please contact a Cree LED representative to insure you get the most up-to-date REACH SVHC Declaration. REACH banned substance information (REACH Article 67) is also available upon request.

UL® Recognized Component

This product meets the requirements to be considered a UL Recognized Component with Level 4 enclosure consideration. The LED package or a portion thereof has been investigated as a fire and electrical enclosure per ANSI/UL 8750.

© 2023-2026 Cree LED. The information in this document is subject to change without notice. Cree®, the Cree logo, XLamp®, EasyWhite®, and the Cree LED logo are registered trademarks, and Pro9 is a trademark, of Cree LED. UL® and the UL logo are registered trademarks of UL LLC.

Downloaded from Arrow.com.

NOTES - CONTINUED

Vision Advisory

WARNING: Do not look at an exposed lamp in operation. Eye injury can result. For more information about LEDs and eye safety, please refer to the LED Eye Safety application note.

© 2023-2026 Cree LED. The information in this document is subject to change without notice. Cree®, the Cree logo, XLamp®, EasyWhite®, and the Cree LED logo are registered trademarks, and Pro9 is a trademark, of Cree LED. UL® and the UL logo are registered trademarks of UL LLC.

Downloaded from Arrow.com.

PACKAGING

CHA0304 Pro9 LEDs are packaged in trays of 80. Five trays are sealed in an anti-static bag and placed inside an inner box, for a total of 400 LEDs per box. Each box contains LEDs from the same performance bin. Eight boxes are placed inside a carton, for a total of 3,200 LEDs per carton.

Dimensions are in mm.
Tolerances: ± 0.5 mm

Load Tray

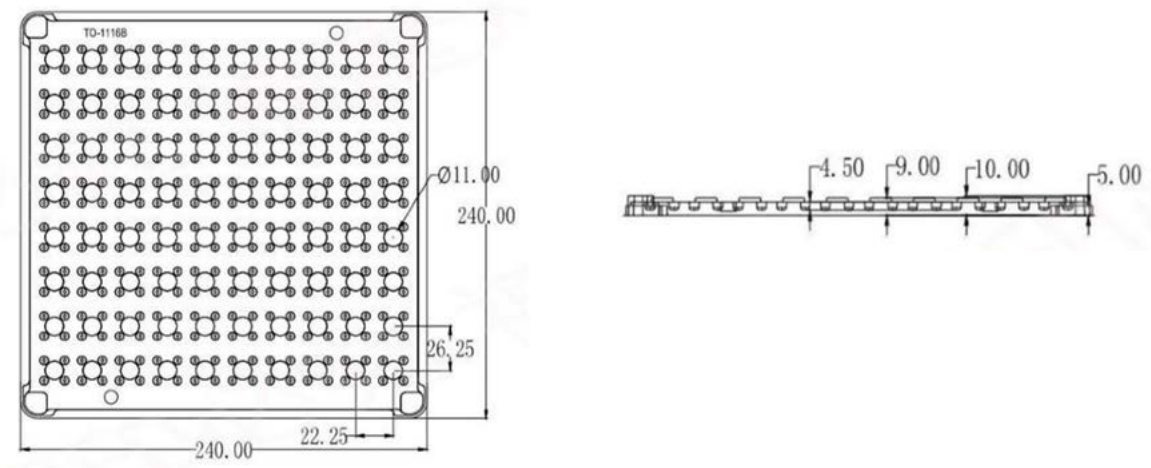

Upper Tray

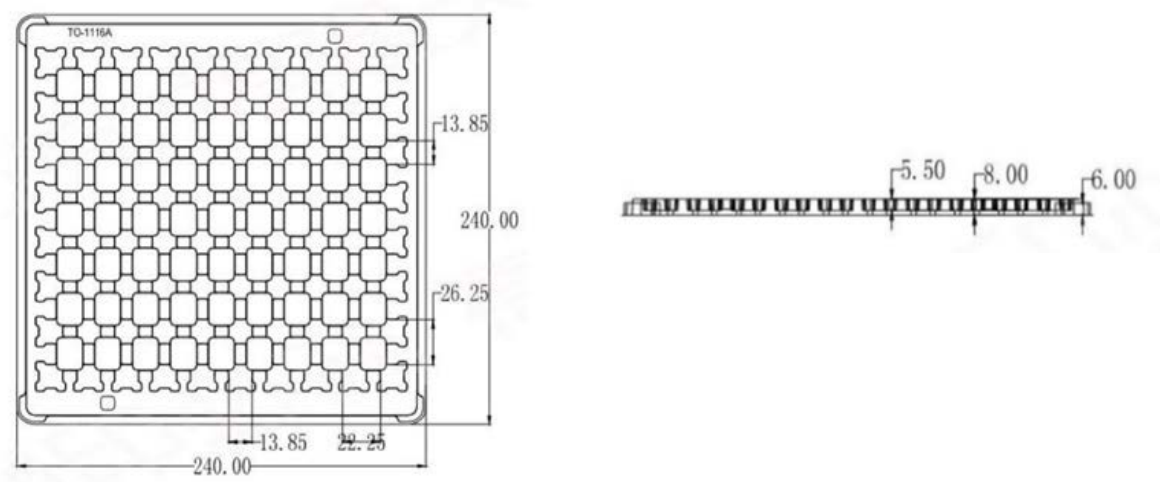

© 2023-2026 Cree LED. The information in this document is subject to change without notice. Cree®, the Cree logo, XLamp®, EasyWhite®, and the Cree LED logo are registered trademarks, and Pro9 is a trademark, of Cree LED. UL® and the UL logo are registered trademarks of UL LLC.

Downloaded from Arrow.com.

PACKAGING - CONTINUED

CHA0304 Pro9 LEDs are packaged in trays of 80. Five trays are sealed in an anti-static bag and placed inside an inner box, for a total of 400 LEDs per box. Each box contains LEDs from the same performance bin. Eight boxes are placed inside a carton, for a total of 3,200 LEDs per carton.

Dimensions are in mm.
Tolerances: ± 3 mm

Inner Box

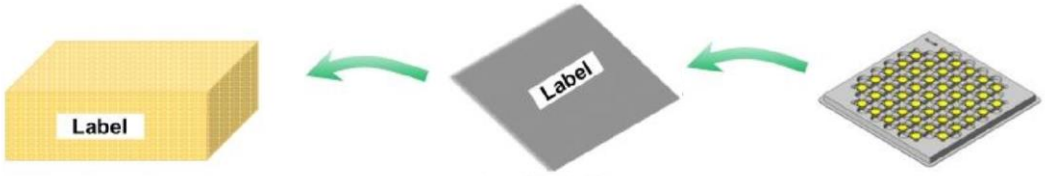

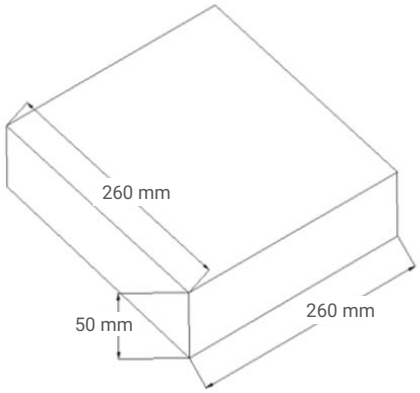

Outer Carton

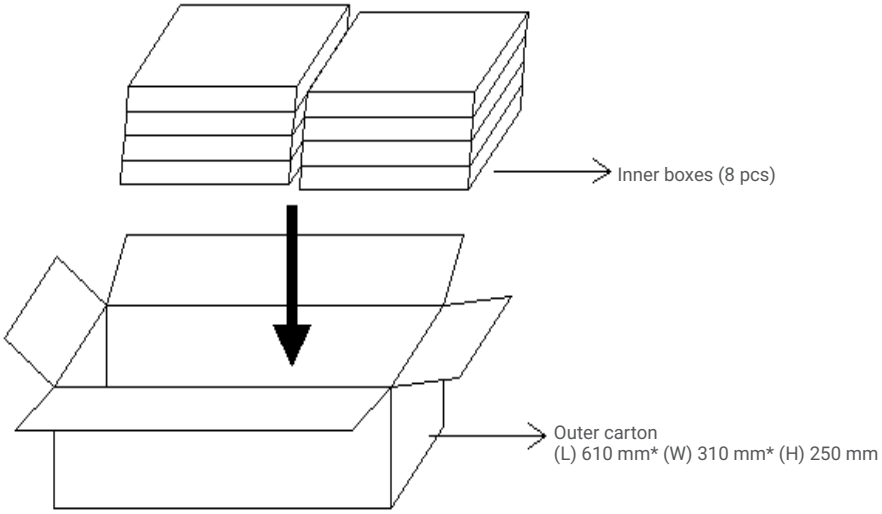

© 2023-2026 Cree LED. The information in this document is subject to change without notice. Cree®, the Cree logo, XLamp®, EasyWhite®, and the Cree LED logo are registered trademarks, and Pro9 is a trademark, of Cree LED. UL® and the UL logo are registered trademarks of UL LLC.

Downloaded from Arrow.com.