MinebeaMitsumi Inc.

MITSUMI

IC selection guide （Lithium-Ion Battery ICs）

2019–2020

English

This catalog shows only outline specifications. When using the products, please obtain formal for specification supply.

Downloaded from Arrow.com.

MinebeaMitsumi's ICs implement high characteristics, high function, space saving, and low power consumption. They provide their optimum performance to meet various requirements.

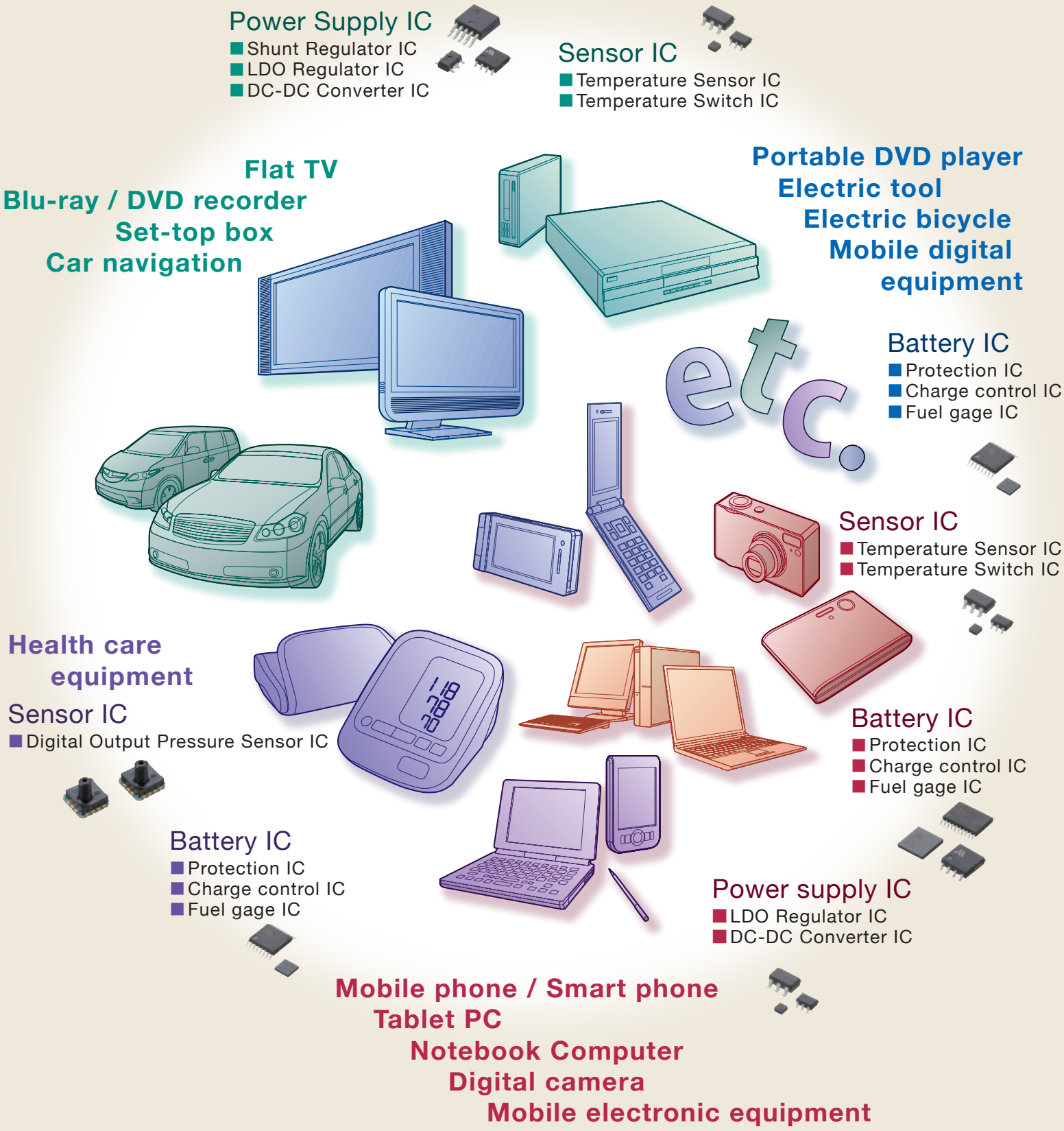

1 SECONDARY BATTERY IC

- Various types of battery IC for single cell to multy–cells are lined up. They are applicable to various devices from mobile gadgets to Electric bicycle.
- The battery IC is provided with a high detection accuracy and abundant functions, enabling safe battery charging and protection.
- MITSUMI's Fuel Gauge IC achieves safe and effective use of batteries by detecting the battery level.

2 POWER SUPPLY IC

- The regulator IC lineup is available with an output current of 150mA to 1.5A. Suited to various applications with a range of products offering features such as high–precision and low consumption current.
- DC–DC converter ICs are available in step–up/step–down/ inversion type variations. Delivers high–efficiency, high–precision output over a wide input voltage range.

3 SENSOR IC

- The sensor IC is characterized by high detecting temperature accuracy and low current consumption. Digital pressure sensors are being developed by MEMS technology.
- The sensor IC is applicable to various applications through abundant rank expansion and I^2C BUS intended interface.

1. SECONDARY BATTERY ICs
P.14 to P.145 Protection for lithium–ion batterie ICs
P.146 to P.153 Lithium–ion battery fuel gauge ICs
P.154 to P.169 Lithium–ion battery charge control ICs

2. POWER SUPPLY ICs
P.172 to P.211 Regulator ICs
P.212 to P.215 Shunt regulator ICs
P.233 to P.239 DC–DC converter ICs
P.240 to P.249 AC–DC converters ICs
P.250 to P.255 LED driver ICs
P.258 to P.289 Reset ICs (Voltage detector)

3. SENSOR ICs
P.292 to P.309 Sensor ICs
P.310 to P.315 Others

Downloaded from Arrow.com.

INDEX

0 INTRODUCE

Category 1
Index 2
IC lineup 6

1 SECONDARY BATTERY ICs

SECONDARY BATTERY ICs Electrical characteristics 10

Protection for lithium–ion batteries

▶ For 1 cell ▶

Small package, Built–in delay timer ..... **MM3280 Series** 14
Small package, Built–in delay timer ..... **MM3511 Series** 20
Small package, High accuracy current detection ..... **MM3638 Serie** 24
High accuracy current detection, With discharge control terminal ..... **MM3645 Series** 28
High accuracy current detection, Multi overcurrent protection ..... **MM3721 Series** 32
High accuracy current detection, High accuracy short detection ..... **MM3722 Series** 36
High accuracy overcharge detective precision, Without an external sense resistor ..... **MM3723 Series** 40
High accuracy current detection, Without an external sense resistor ..... **MM3724 Series** 42
High accuracy current detection, Without an external sense resistor ..... **MM3725/MM3726 Series** 46
N channel high side FET drive ..... **MM3746 Series** 48
High accuracy current detection, With charge and discharge control terminal ..... **MM3855 Series** 52
NEW High accuracy current detection Multi overcurrent protection ..... **MM3856 Series** 54
NEW Very high accuracy current detection Multi overcurrent protection ..... **MM3860 Series** 58
Built in FET, Low on state resistance 10.6mΩ ..... **MC3002 Series** 62
Built in FET, On state resistance 13.4mΩ ..... **MC3011 Series** 66
Built in FET, Super small package ..... **MD1421ExxCPAL Serie** 70
Built in FET, for Wearable ..... **MC3651 Series** 74
NEW Built in FET , Very low current consumption ..... **MC3761 Series** 78
Built in FET, for Wide customization by OTP ..... **MJ3401 Series** 82
NEW Built in FET, for Wide customization by OTP ..... **MJ3542 Series** 86

▶ For 2 cells ▶

Built–in delay timer ..... **MM3220 Series** 90
NEW Built-in delay timer ..... **MM3766 Series** 94

▶ For 3 cells

Delay time set by external capacitor, Temperature protection ..... **MM3783 Series** 98

▶ For 3 to 5 cells ▶

Delay time set by external capacitor ..... **MM3474 Series** 102
Built–in delay timer, Cell balance, Disconnetct detection function ..... **MM3575 Series** 106
Delay–timer set by external capacitor, Temperature detection, Secondary protection function ..... **MM3684 Series** 112
NEW Delay -timer set by external capacitor, Temperature detection ..... **MM3694 Series** 116

▶ For 4 to 7 cells ▶

NEW Built-in delay timer, Cell balance, Temperature detection ..... **MM3877 Series** 120

▶ Secondary protection ▶

For 1 cell, Low current consumption ..... **MM3734 Series** 126
For 2 to 4 cells with latch function ..... **MM3508A Series** 128
For 2 to 4 cells without latch function ..... **MM3508B Series** 129
For 2 to 3 cells with terminal CT ..... **MM3508C Series** 130
For 1 to 3 cells ..... **MM3563 Series** 132
For 3 to 4 cells with RTC control function ..... **MM3625 Series** 134

▶ Voltage monitoring ▶

Voltage monitoring IC with protection IC, EEPROM ..... **MW3790 Series** 138
Voltage monitor IC with protection IC ..... **MM3793 Series** 140
Voltage and temperature monitoring IC ..... **MM3757 Series** 142

▶ Cell balance control ▶

Voltage monitor ..... **MM3513 Series** 144

Fuel gage for lithium–ion battery ICs

For 1 cell, High accuracy fuel gauging, Battery degradation judgment **MM8013** 146
NEW For 1 cell, High accuracy fuel gauging, Super low consumption **MM8013W** 148

For 1 cell, High accuracy fuel gauging, Battery degradation judgment, Small package MM8033 150
For 1 cell, High accuracy fuel gauging MM3556 152

Lithium–ion battery charge control ICs

Charge only/ Linear charge control, Standard type MM3458 154
Charge only/ Linear charge control, CV adjustale(4.2V/4.05V) MM3635 156
Charge only/ Linear charge control, Low charge current control (3 to 1000mA) MM3835W 158
Charge only/ Linear charge control, For iron phosphate Li-Ion (CV=3.6V) MM3658 160
NEW Charge only/ Linear charge control, Ultra small type,
Low charge current control(3 to 500mA), Full charge detection current setting MM3865 162
Included System-Path/ Linear charge control, Battery support function,
Auto input source detection MM3538 164
Included System-Path/ Switching charge control, Charge current 2A MM3439 166
Included System-Path/ Switching charge control, Charge current 2A,
Included ADC/RTC MM3539 168

2 POWER SUPPLY ICs

POWER SUPPLY ICs electrical characteristics 170

Voltage regulator ICs

▶ Output current 150mA or less LDO regulators ▶
Reverse current protection ..... MM3376 Series 172
Low current consumption ..... MM3534, MM3755 Series 174
▶ Output current 200mA or less LDO regulators ▶
Fast transient response, Rush current protection ..... MM3411, MM3763 Series 176
Capacitor–less, Ultra–low quiescent current ..... MM3566, MM3866 Series 180
15V withstand voltage ..... MM1836, MM1856 Series 182
16V withstand voltage, Reverse bias protection ..... MM1839 Series 184
NEW Low noise, Negative output voltage ..... MM1898 Series 186
▶ Output current 300mA or less LDO regulators ▶
Fast transient response, Rush current protection ..... MM3571, MM3871 Series 188
With thermal shutdown circuit ..... MM3608 Series 192
15V withstand voltage ..... MM1886 Series 194
NEW Low noise ..... MM1899 Series 196
▶ Output current 500mA or less LDO regulator ▶
Soft start function ..... MM3526, MM3478 Series 198
▶ Output current 1000mA or less LDO regulators ▶
15V withstand voltage ..... MM1877 Series 200
Soft start function ..... MM3529, MM3479 Series 202
NEW Soft-start function ..... MM3702, MM3703 Series 204
▶ Output current 1500mA or less LDO regulator ▶
Low output voltage, Low dropout voltage ..... MM1870 Series 206
▶ Output current 150mA or less LDO regulator ▶
2–channel output, Small package ..... MM3548 Series 208
▶ Output current 300mA or less LDO regulator ▶
NEW 2–channel output, Small package ..... MM3549 Series 210

Shunt regulators

2.495V reference voltage, Precision adjustable shunt regulator ..... MM1431 Series 212
1.240V/1.250/1.270V reference voltage, Precision adjustable shunt regulator ..... MM1530 Series 214
POWER SUPPLY ICs electrical characteristics 216

DC–DC converters

Boost, Built–in power FET, PWM/PFM MM3333 218
Boost, Built–in power FET, PWM/PFM MM3355 220
Buck, Built–in power FET, PWM MM3370 222
NEW Buck, Low LQ and high efficiency, 0.6A/1.0A output MM3472, MM3617 224
Buck, Built–in 2A power FET, PWM MM3542BF 226
Buck, Built–in 3A power FET, PWM MM3543BH 226
NEW Buck, Output voltage compensation MM3630BV/BR 228
NEW Buck, 0.9A High-accuracy MM3690ARBE 230
NEW Buck, Synchronous rectification, DC/DC controller MM3736BRLE 232
Dual buck, Built–in 1.5A power FET, PWM MM3558 234

Downloaded from Arrow.com.

INDEX

Charge pump voltage inverter MM3631 238

AC–DC converters

Primary–side QR controller MM3661 240
NEW Primary–side PWM controller MM3663 242
Secondary–side synchronous rectifier for QR/LLC MM3667 244
NEW Secondary–side synchronous rectifier for LLC MM3669AF 248

LED lighting ICs

White LED driver 7 LEDs MM3097 250
Including PFC 1 convertor for flyback ..... MM3460+MM1837 252
Triac dimmer power control for LED lighting MM3760 254

Reset ICs electrical characteristics 256

Reset ICs (Voltage detector)

No delay function, Active–Low, CMOS output ..... IC-PST81 Series 258
No delay function, Active–Low, Open drain output ..... IC-PST82 Series 258
NEW No delay function, Active–Low, Open drain output ..... IC-PST86 Series 262
Separated sense line, Active–Low, CMOS/ open drain output ..... PST851A Series, PST852A Series 264
NEW Separated sense line, Active–Low, CMOS/ open drain output, Built-in deley fuction ..... PST853A Series, PST854A Series 268
Delay function included (external capacitor), Active–Low CMOS output ..... IC-PST83 Series 270
Delay function included (external capacitor), Active–Low open drain output ..... IC-PST84 Series 270
NEW Delay function included (external capacitor), Active–Low CMOS/ open drain output ..... PST893A/PST894A Series 274
NEW High accuracy delay time ..... PST893B/PST894B Series 278
NEW High accuracy delay time, With manual reset ..... PST893R/PST894R Series 282
Built–in delay function, Active–Low, CMOS output ..... PST87 Series 284
Built–in delay function, Active–Low, Open drain output ..... PST88 Series 284
Built–in delay function, Active–Low, Open drain output ..... PST803 Series, PST805 Series 288
Built–in delay function, Active–High, Open drain output ..... PST804 Series, PST806 Series 288
Built–in delay function, Active–Low, CMOS output ..... PST807 Series, PST809 Series 288
Built–in delay function, Active–High, CMOS output ..... PST808 Series, PST810 Series 288

3 SENSOR ICs

SENSOR ICs electrical characteristics 290

Temperature sensor ICs

Temperature switch IC with hysteresis (active–high) ..... MM3488 Series 292
Temperature switch IC with hysteresis (ultra low current consumption) ..... MM3688 Series 294
Analog output temperature sensor ..... MM3154 Series 296
Temperature sensor for I^2C BUS (address set pin 2) ..... MM3285 Series 298

Pressure sensor

Pressure sensor of digital output MMR901XA 300
Pressure sensor of digital output, Low supply voltage MMR902 302
NEW Pressure sensor of digital output, Small package MMR906 304

Absolute Pressure sensor Module

NEW Absolute Pressure Sensor Module MMR931XA 306

AC current sensor

NEW Operational amplifier with a built-in spiral inductor MM1969 308

Flame detection amplifier

NEW Contains a comparator MM1217 310
NEW Dual amplifier MM1278 312

Analog signal convert IC

NEW Analog Front End IC MM3609 314

Downloaded from Arrow.com.

4 DISCONTINUATION INFORMATION

Products to be discontinued 316
Phased out products 318

5 PACKAGE

Package line–up 320
Package 322
Pb–free recommended profile 365
Permissible counts of the solder methods for each packages 366

IC LINEUP

1 SECONDARY BATTERY ICs

Protection for lithium-Ion batteries

				PLP-4D	PLP-4E	PLP-4-1228	PLP-6G	PLP-6J	PLP-10A	SON-6C	SON-6F	SOT-26A	SOT-26B	SSON-6A	SSON-6E	SSON-6J	SSON-6K	SSON-6M	SSON-6N	SSON-8F	SSON-8G	TSOP-8A	TSOP-16B	TSOP-20D	VSOP-20A	VSOP-24A	WLCSP-6B	WLCSP-6C	WLCSP-10A
For 1 cell	Small package	Built-in delay timer	MM3280							●		●	●		●	●	●												
		Built-in delay timer	MM3511							●				●		●													
		High accuracy current detection	MM3638							●						●													
		Temperature detection	MM3645																			●							
		Multi overcurrent protection	MM3721							●						●													
		High accuracy short detection	MM3722							●						●													
		High accuracy overcharge precision	MM3723																								●		
		High accuracy overcharge precision	MM3724							●						●													
		High accuracy overcharge precision	MM3725, MM3726							●						●		●											
		N channel high side FET drive	MM3746																										●
		High accuracy overcharge detection	MM3855																	●	●								
		Multi overcurrent protection	MM3856							●						●		●											
		Very high accuracy current detection	MM3860								●					●		●											
	Built-in FET	Low on state resistance 10.6mΩ	MC3002	●																									
		On state resistance 13.4mΩ	MC3011	●																									
		Super small package	MD1421ExxCPAL			●																							
		Wearable	MC3651		●																								
		Very low current consumption	MC3761					●																					
		Customization by OTP	MJ3401				●																						
		Customization by OTP	MJ3542																●										
For 2 cells		Built-in delay timer	MM3220									●																	
		Built-in delay timer	MM3766										●																
For 3 cells		Delay time set by external capacitor	MM3783																				●						
For 3 to 5 cells		Delay time set by external capacitor	MM3474																					●					
		Built-in delay timer	MM3575																							●			
		Delay time set by external capacitor	MM3684																							●			
		Delay time set by external capacitor	MM3694																							●			
For 4 to 7 cells		Built-in delay timer	MM3877																						●				
For secondary protection		For 1 cell	MM3734							●																			
		For 2 to 4 cells with latch function	MM3508A									●		●															
		For 2 to 4 cells without latch function	MM3508B									●		●															
		For 2 to 3 cells with terminal CT	MM3508C									●		●															
		For 1 to 3 cells	MM3563									●		●															
		For 3-4 cells with RTC control function	MM3625						●																				

Voltage Monitering IC for li-ion battery

			PLP-6H	PLP-8G	PLP-8H	SOT-25A
Voltage monitoring	Protection EEPROM	MW3790		●		
	Protection	MW3793			●	
	Monitering	MM3757	●			

		SOT-25A
Cell balance control	MM3513	●

Fuel gauge IC for li-ion battery

				PLP-8F	PLP-10D	PLP-12A	PLP-12B	WLCSP-9A
For 1 cell	High accurach	Battery degradation judgment	MM8013			●		
		Super low consumption	MM8013W				●	
		Small package	MM8033		●			●
			MM3556	●				

Lithium–ion battery charge control ICs

				SSON-6E	SSON-10A	WLCSP-25A	SQFN-32A	WLCSP-48B
For 1 cell	Single function	Linear charger	MM3458		●			
			MM3635		●			
			MM3835W		●			
			MM3658		●			
			MM3865	●				
	Built-in System path	Linear charger	MM3538			●		
		Switching charger	MM3439				●	
			MM3539					●

2 POWER SUPPLY ICs

Voltage regulator ICs

			HSOP-8E	HSOP-8A	PLP-4C	PLP-6C	PLP-8E	SC-82ABB	SOT-25A	SOT89-5A	SSON-6A	SSON-6E	TO-252C	TO-252-5A
Less than 150mA LDO regulators	Reverse current protection	MM3376						●	●					
	Low current consumption	MM3534						●	●					
		MM3755			●									
Less than 200mA LDO regulators	Rush current protection	MM3411						●	●					
		MM3763			●									
	Capacitorless, ultralow quiescent current	MM3566						●	●					
		MM3866			●									
	15V withstand voltage	MM1836							●					
		MM1856						●	●					
	16V withstand voltage	MM1839							●			●		
	Low noise, Negative output voltage	MM1898							●		●			
Less than 300mA LDO regulators	Rush current protection	MM3571						●	●	●				
		MM3871			●									
	Thermal shoutdown circuit	MM3608							●					
	15V withstand voltage	MM1886							●	●				
	Low noise	MM1899							●		●			
Less than 500mA LDO regulator	Soft start function	MM3526							●	●	●			
		MM3478								●				
Less than 1000mA LDO regulators	15V withstand voltage	MM1877		●										
	Soft start function	MM3529								●	●			
		MM3479								●				
	Soft start function	MM3702								●				
		MM3703	●							●	●			
Less than 1500mA LDO regulator	Low output voltage	MM1870		●										●
Less than 150mA 2–channel LDO regulator		MM3548				●								
Less than 300mA 2–channel LDO regulator		MM3549					●							

Downloaded from Arrow.com.

IC LINEUP

Shunt regulators

				SC82ABB	SOT-23A	SOT-25A
Adjustable shunt regulator	Vref 2.495V		MM1431	●	●	●
	Vref 1.240V / 1.250V/1.270V		MM1530	●	●	

DC-DC converters

					HSOP-8A	HSOP-8C	SOP-8D	SOT-26B	SQFN-16A	SQFN-16B	SQFN-24A	SSON-6L	SSON-8E	TSOP-20E
Boost	Built-in powerFET	100mA		MM3333				●						
		200mA		MM3355			●							
Buck	Output 1ch	Synchronous rectification	3A	MM3370	●									
		Diode rectification	0.6A	MM3472								●		
			1.0A	MM3617								●		
			2A	MM3542BF			●							
			3A	MM3543BH		●								
			2.5A	MM3630BV										●
			1.5A	MM3630BR							●			
			0.9A	MM3690ARBE									●	
	External power FET		20A	MM3736BRLE						●				
Inverter	Charge pump			MM3558					●					
Double buck	Output 2ch + LDO			MM3631				●						

AC-DC converters

				SOP-8D	SOP-8J	SOP-10A
Primary-side	QR controller		MM3661			●
	PWM controller		MM3663		●	
Secondary-side	Synchronous rectifier	QR	MM3667		●	
		LLC	MM3669AF			●

LED lighting ICs

				SOT-25A	SOP-8C	SOP-8D	SOP-10A
DC Input		White LED driver 7 LEDs	MM3097	●			
AC Input	Isolated	Including PFC 1 convertor for flyback	MM3460			●	
		Dual OPAMP and shunt regulator	MM1837		●		
	Non-isolated	Triac dimmer power control	MM3760				●

Downloaded from Arrow.com.

Reset ICs (Voltage detectors)

					PLP-4A	SC-82ABB	SOT-23A	SOT-25A	SSON-4B
No delay function	Active-low	CMOS output		IC-PST81		●		●	●
		Open drain output		IC-PST82		●		●	●
		Open drain output		IC-PST86		●		●	
Separated sense line	Active-low	CMOS/Open drain output		PST851A, PST852A		●		●	●
		CMOS/Open drain output	Built-in delay function	PST853A, PST854A				●	
Delay function included (external capacitor)	Active-low	CMOS output		IC-PST83		●		●	●
		Open drain output		IC-PST84		●		●	●
		CMOS/Open drain output		PST893A, PST894A	●	●		●	
			High accuracy	PST893B, PST894B		●		●	
			With manual reset	PST893R, PST894R				●	
Built-in delay function	Active-low	CMOS output		PST87		●		●	●
				PST88		●		●	●
		Open drain output		PST807, PST809			●		
				PST803, PST805			●		
	Active-high	CMOS output		PST808, PST810			●		
		Open drain output		PST804, PST806			●		

3 SENSOR ICs

Temperature sensor ICs

				PLP-4A	SC-82ABB	SOT-25A	SOT-26A	SSON-4B
Detection output type (Temperature switch IC)		Active-high	MM3488					●
	Ultra low current consumption	Active-high	MM3688	●				
Sensor type	Analog output		MM3154		●			●
	I^2C BUS digital output (Adress set pin2)		MM3285			●	●	

Pressure sensor

Pressure sensor of digital output		MMR901XA	*Original package
	Low supply voltage	MMR902	
	Small package	MMR906	

Absolute Pressure sensor module

Absolute Pressure Sensor Module	MMR931XA	*Original package

AC current sensor

AC current sensor	Operational amplifier with a built-in spiral inductor	MM1969	SOP-8G

Flame detection amplifier

			SOP-8D
Flame detection sensor	Contains a comparator	MM1217	●
	Dual amplifiern	MM1278	●

Analog signal convert IC

Analog Front End IC	MM3609	PLP-24

Downloaded from Arrow.com.

1 SECONDARY BATTERY ICs

Electrical characteristics (Unless otherwise specified, Ta=+25°C)

Protection for lithium–ion batteries

Product series	Product name	Overcharge detection voltage (Accuracy)	Overdischarge detection voltage (Accuracy)	Discharging overcurrent detection voltage (Accuracy)	Detection delay time	Package
For one-cell	**MM3280 series** Overcurrent detection by external resistor	3.8V to 4.5V (±20mV)	2.0V to 3.0V (±35mV)	50mV to 300mV (±10mV)	Delay timer (Built–in)	SON–6C SOT–26A /26B SSON–6E /6J /6K
	MM3511 series Standard	4.0V to 4.5V (±20mV)	2.0V to 3.0V (±35mV)	50mV to 300mV (±10mV)	Delay timer (Built–in)	SON–6C SSON–6A /6J
	MM3638 series High accuracy Overcurrent detection	4.0V to 4.5V (±20mV)	2.0V to 3.0V (±35mV)	20mV to 65mV (±15%) 65mV to 300mV (±10mV)	Delay timer (Built–in)	SON–6C SSON–6J
	MM3645 series High accuracy Overcurrent detection	4.0V to 4.5V (±20mV)	2.0V to 3.0V (±35mV)	20mV to 300mV (±15%)	Delay timer (Built–in)	TSOP–8A
	MM3721 series High accuracy Overcurrent detection	3.8V to 4.5V (±20mV)	2.0V to 3.0V (±35mV)	20mV to 150mV (Refer to product page)	Delay timer (Built–in)	SON–6C SSON-6J
	MM3722 series High accuracy Overcurrent detection	3.8V to 4.5V (±20mV)	2.0V to 3.0V (±35mV)	20mV to 150mV (Refer to product page)	Delay timer (Built–in)	SON–6C SSON–6J
	MM3723 series High accuracy over voltage detection	3.6V to 4.6V (±12mV)	2.0V to 3.0V (±35mV)	20mV to 100mV (Refer to product page)	Delay timer (Built–in)	WLCSP-6B
	MM3724 series High accuracy Overcurrent detection	3.8V to 4.5V (±20mV)	2.0V to 3.0V (±35mV)	20mV to 300mV (Refer to product page)	Delay timer (Built–in)	SON–6C SSON-6J
	MM3725 /MM3726 series High accuracy overcurrent detection	3.6V to 5.0V (±20mV)	2.0V to 3.0V (±35mV)	20mV to 300mV (Refer to product page)	Delay timer (Built–in)	SON–6C SSON-6J SSON-6M
	MM3746 series N channel high side FET driver	4.2V to 4.6V (±15mV)	2.0V to 3.0V (±40mV)	10mV to 150mV (Refer to product page)	Delay timer (Built–in)	WLCSP-10A
	MM3855series High accuracy overcurrent detection	4.0V to 4.5V (±20mV)	2.1V to 3.0V (±35mV)	6mV to 100mV (±2.5mV) 15mV to 100mV (±3.5mV)	Delay timer (Built–in)	SSON-8F SSON-8G
	MM3856series NEW High Accuracy two step discharge overcurrent detection	4.1V to 5.0V (±20mV)	2.1V to 3.0V (±35mV)	Please Refer to Data-Sheet	Delay timer (Built-in)	SSON-6J/6M SON-6C
	MM3860series NEW Very high Accuracy two step discharge overcurrent detection	4.1V to 5.0V (±20mV)	2.1V to 3.0V (±35mV)	6mV to 50mV (±1mV)	Delay timer (Built-in)	SSON-6J/6M SON-6F
	MC3002 series Built in FET, Low on state resistance 10.6mΩ	4.15V to 4.5V (±22mV)	2.0V to 3.0V (±100mV)	30mV to 130mV (±6mV)	Delay timer (Built–in)	PLP–4D
	MC3011 series Built in FET, On state resistance 13.4mΩ	4.15V to 4.5V (±22mV)	2.0V to 3.0V (±100mV)	30mV to 130mV (±6mV)	Delay timer (Built–in)	PLP–4D
	MD1421ExxCPAL series	4.1V to 4.45V (±20mV)	2.0V to 3.0V (±100mV)	40mV to 180mV (±5mV)	Delay timer (Built–in)	PLP–4–1228
	MC3651 series Built in FET, for Wearable	4.15V to 4.5V (±20mV)	2.00V to 3.00V (±100mV)	20mV to 65mV (±5mV)	Delay timer (Built–in)	PLP-4E
	MC3761 series NEW Very low current consumption	4.2V to 4.7V (±20mV)	2.0V to 3.3V (±30mV)	Please Refer to Data-Sheet	Delay timer (Built-in)	PLP-6J
	MJ3401 series Built in FET, OTP (Built–in)	4.10V to 4.60V (±10mV)	2.0V to 3.0V (±35mV)	---	Delay timer (Built–in)	PLP-6G
	MJ3542 series NEW Possible by OTP technology to detect very high accuracy	4.1V to 4.6V (±10mV)	2.0V to 2.8V (±35mV)	Please Refer to Data-Sheet	Delay timer (Built-in)	SSON-6N
For 2-cells	**MM3220 series**	4.0V to 4.5V (±20mV)	2.0V to 3.0V (±35mV)	50mV to 300mV (±10mV)	Delay timer (Built–in)	SOT–26A
	MM3766 series NEW	3.6V to 4.5V (±15mV)	2.0V to 3.0V (±35mV)	Please Refer to Data-Sheet	Delay timer (Built-in)	SOT-26B
For 3-cells	**MM3783 series** Temperature protect	3.6V to 4.5V (±25mV)	2.0V to 3.0V (±80mV)	30mV to 300mV (±10mV)	Delay timer (External)	TSOP–16B

Electrical characteristics

(Unless otherwise specified, Ta=+25°C)

Product series	Product name	Overcharge detection voltage (Accuracy)	Overdischarge detection voltage (Accuracy)	Discharging overcurrent detection voltage (Accuracy)	Detection delay time	Package
For 3 to 5 cells	**MM3474 series**	3.6 to 4.5 (±25mV) (Top=0 to 50°C)	2.0V to 3.0V (±80mV)	50mV to 300mV (±15mV)	Delay timer (External)	TSOP-20D
	MM3575 series Cell balance	3.6 to 4.5 (±25mV)	2.0V to 3.0V (±80mV)	30mV to 300mV (±15mV)	Delay timer (Built–in)	VSOP–24A
	MM3684 series Temperature protect, Second protect	3.6 to 4.5 (±25mV)	2.0V to 3.0V (±80mV)	30mV to 300mV (±15%)	Delay timer (External)	VSOP–24A
	MM3694 series NEW	3.6V to 4.5V (±25mV)	2.0V to 3.0V (±80mV)	30mV to 300mV (±15%)	Delay timer (External)	VSOP-24A
For 4 to 7 cells	**MM3877 series** NEW	3.6V to 4.5V (±20mV)	2.0V to 3.0V (±50mV)	30mV to 300mV (±10%)	Delay timer (Built-in)	VSOP-20A
For 1 cell secondary protection	**MM3734 series** Low current consumption	4.0V to 5.0V (±20mV)	–	–	Delay timer (Built–in)	SON–6C
For 2 to 4 cells secondary protection	**MM3508A series** For 2 to 4 cells built in latch function	4.0V to 4.5V (±20mV) (Top=0 to 50°C)	–	–	Delay timer (Built–in)	SOT–26A SSON–6A
	MM3508B series For 2 to 4 cells no built in latch function					
	MM3508C series For 2 to 3 cells with terminal CT					
For 1 to 3 cells secondary protection	**MM3563 series**	4.0V to 4.5V (±25mV) (Top=0 to 50°C)	–	–	Delay timer (Built–in)	SOT–26A SSON–6A
For 3 to 4 cells secondary protection	**MM3625 series** RTC control function	3.6V to 4.5V (±25mV)	–	–	Delay timer (Built–in)	PLP–10A

Product series	Product name	cell balance	Monitoring(I/F)	Protection(Chip)	Memory	Packages
Voltage monitoring IC	**MW3790**	1 cell	○ (MIPI®)	○ (MM3722)	○ (EEPROM)	PLP-8G
	MW3793	1 cell	○ (MIPIz®)	○ (MM3722)	-	PLP-8H
	MM3757	1 cell	○ (MIPI®)	-	-	PLP-6A

Product series	Product name	Detection voltage (Accuracy)	Hysteresis voltage	Detection delay	Packages
Voltage monitor IC cell-balance control	**MM3513 series**	3.5V to 4.5V (±20mV)	0.0V to 0.4V	Delay timer (Built–in)	SOT–25A

Lithium-ion fuel gage ICs

Product series	Product name	Algorithm	Oparating voltage	Main program	SOC unit	Deterioration judgement	Current consumption	Traceability	Packages
For one-cell	**MM8013**	Intelligent gage 3 current integratio	2.5V to 5.5V	Flash	% mAh	●	60μA Typ.	●	PLP–12A
	MM8013W NEW	Intelligent gage 2 current integration, Ultra low power consumption	2.5V to 5.5V	Flash	% mAh	●	6.4μA Typ. IA (Interval Active) mode 20μA Typ. LPA (Low Power Active) mode	●	PLP–12B
	MM8033	Intelligent gage 2 Current integration	2.5V to 5.5V	ROM	% mAh	●	32μA Typ.	–	PLP–10D WLCSP–9A
	MM3556	Intelligent gage, Voltage monitor	2.2V to 5.0V	Logic	%	–	28μA Typ.	–	PLP–8F

Electrical characteristics (Unless otherwise specified, Ta=+25°C)

Lithium-ion battery charge control ICs

Product series	Product name	Operating voltage	BAT regulation voltage	Fast charge current (max.)	FET output	Timer	JEITA charge profile	System pass SW	Charge system	Packages
For one-cell	**MM3458**	4.0V to 6.0V	4.2V±30mV (±0.7%)	1.5A	Built–in	Built–in	●	–	Linear	SSON–10A
	MM3635	4.5V to 5.5V	4.2V±30mV (±0.7%) 4.05V±50mV (±1.2%)	0.7A	Built–in	Built–in	–	–	Linear	SSON–10A
	MM3835W For wearable	4.35V to 5.8V	4.1V±30mV 4.2V±30mV 4.35V±30mV	1.0A	Built–in	Built–in	●	–	Linear	SSON–10A
	MM3658	4.0V to 6.0V	3.6V±30mV (±0.8%)	1.5A	Built–in	Built–in	–	–	Linear	SSON–10A
	MM3865 NEW Ultra small type	4.4V to 6.0V	4.10V to 4.45V (±30mV)	0.5A	Built–in	Built–in	●	–	Linear	SSON–6E
	MM3538	4.35V to 5.5V	4.2V±30mV (±0.7%)	1.5A	Built–in	Built–in	●	Built–in	Linear	WLCSP–25A
	MM3439	4.5V to 5.5V	4.2V±30mV (±0.7%)	2.0A	Built–in	Built–in	●	Built–in	Switching	SQFN–32A
	MM3539 Built–in RTC/ ADC	4.5V to 5.5V	4.2V±30mV (±0.7%)	2.0A	Built–in	Built–in	●	Built–in	Switching	WLCSP–48B

1 cell lithium–ion/lithium–polymer battery protection IC

MM3280 Series

Outline

MM3280 series are protection IC using high voltage CMOS process for protection of the rechargeable lithium-ion or lithium-polymer battery. The overcharge, overdischarge and discharging and charging (optional) overcurrent protection of the rechargeable one–cell lithium-ion or lithium-polymer battery can be detected.

Features

(Unless otherwise specified, Ta=25°C)

(1) Range and accuracy of detection/release voltage

- Overcharge detection voltage ..... 3.8V to 4.5V, 5mV steps ..... Accuracy±20mV
  Accuracy±25mV (Topr=–5 to +60°C)
- Overcharge release voltage ..... 3.6V to 4.5V, 50mV steps ..... Accuracy±30mV
- Overdischarge detection voltage ..... 2.0V to 3.0V, 50mV steps ..... Accuracy±35mV
- Overdischarge release voltage ..... 2.0V to 3.5V, 50mV steps ..... Accuracy±100mV
- Discharging overcurrent detection voltage ..... 50mV to 300mV, 5mV steps ..... Accuracy±10mV
- Charging overcurrent detection voltage* ..... –300mV to –50mV, 5mV steps ..... Accuracy±20mV
- Short detection voltage ..... Selection for 0.7, 0.8, 0.9V ..... Accuracy±100mV
- Over voltage charger detection voltage* ..... VDD–8.0V fixed ..... Accuracy±2.0V
- Over voltage charger release voltage* ..... VDD–7.3V fixed ..... Accuracy±2.0V

(2) Range of detection delay time

- Overcharge detection delay time ..... Selection from 0.25s, 1.0s, 1.2s, 4.5s
- Overdischarge detection delay time ..... Selection from 20ms, 24ms, 96ms, 125ms, 128ms, 144ms
- Discharging overcurrent detection delay time ..... Selection from 8ms, 12ms, 16ms, 20ms, 24ms, 48ms, 96ms, 160ms
- Charging overcurrent detection delay time ..... Selection from 4ms, 6ms, 8ms, 10ms, 12ms, 16ms, 96ms
- Short detection delay time ..... Selection from 200μs, 300μs, 400μs

(3) 0V battery charge function ..... Selection from “Permission” or “Prohibition”

(4) The overcharge detection delay timer reset time function (function for the pulse charge) is provided. *

* Optional function

(5) Low current consumption

- Normal mode ..... Typ. 3.0μA, Max. 6.0μA
- Stand-by mode ..... Max. 0.1μA
  (For “Charger connection release” the overdischarge release condition.)
  Max. 0.5μA
  (For “Voltage release” the overdischarge release condition.)

(6) Absolute maximum ratings

- VDD pin ..... VSS–0.3V to +12V
- COUT pin and V- pin ..... VDD–28V to VDD+0.3V
- DOUT pin ..... VSS–0.3V to VDD+0.3V
- Storage temperature ..... –55 to +125°C
- Operation temperature ..... –40 to +85°C

Pin assignment

SOT-26A SOT-26B

(Top view)

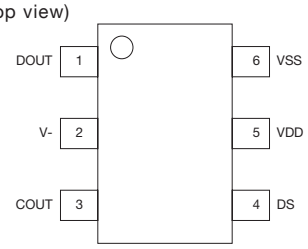

Pin no.	Symbol	Function
1	DOUT	Output of overdischarge detection (Output type is CMOS)
2	V–	Input terminal connected to charger negative voltage
3	COUT	Output of overcharge detection (Output type is CMOS)
4	DS	Delay shorten terminal
5	VDD	VDD terminal (Connected to IC substrait)
6	VSS	VSS terminal (Connected to ground)

SON-6C

(Top view)

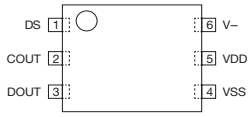

Pin no.	Symbol	Function
1	DS	Delay shorten terminal
2	COUT	Output of overcharge detection (Output type is CMOS)
3	DOUT	Output of overdischarge detection (Output type is CMOS)
4	VSS	VSS terminal (Connected to ground)
5	VDD	VDD terminal (Connected to IC substrait)
6	V–	Input terminal connected to charger negative voltage

SSON-6 Pin Assignment is different depending on rank.

SSON-6J MM3280A01RRE, MM3280F02RRE, MM3280G01RRE, MM3280G02RRE, MM3280S02RRE, MM3280T02RRE, MM3280R03RRE

(Top view)

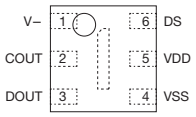

Pin no.	Symbol	Function
1	V–	Input terminal connected to charger negative voltage
2	COUT	Output of overcharge detection (Output type is CMOS)
3	DOUT	Output of overdischarge detection (Output type is CMOS)
4	VSS	VSS terminal (Connected to ground)
5	VDD	VDD terminal (Connected to IC substrait)
6	DS	Delay shorten terminal

SSON-6E, 6J MM3280B04RRE,MM3280B05RRE, MM3280P09RRE, MM3280P10RRE, MM3280P12RRE, MM3280P16RRE, MM3280P17RRE, MM3280P20RRE, MM3280P21RRE, MM3280P22RRE, MM3280P23RRE, MM3280P25RRE, MM3280PA1RRE

(Top view)

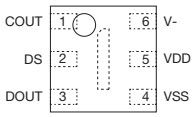

Pin no.	Symbol	Function
1	COUT	Output of overcharge detection (Output type is CMOS)
2	DS	Delay shorten terminal
3	DOUT	Output of overdischarge detection (Output type is CMOS)
4	VSS	VSS terminal (Connected to ground)
5	VDD	VDD terminal (Connected to IC substrait)
6	V–	Input terminal connected to charger negative voltage

SSON-6K MM3280C01RRE

(Top view)

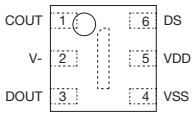

Pin no.	Symbol	Function
1	COUT	Output of overcharge detection (Output type is CMOS)
2	V–	Input terminal connected to charger negative voltage
3	DOUT	Output of overdischarge detection (Output type is CMOS)
4	VSS	VSS terminal (Connected to ground)
5	VDD	VDD terminal (Connected to IC substrait)
6	DS	Delay shorten terminal

Selection guide

MODEL	Package	Optional function				Detection / Release voltage							Detection delay time				
		0V battery charge function	Charging overcurrent detection	Over voltage charger detection	Overcharge detection delay timer reset time	Overcharge detection voltage	Overcharge release voltage	Overdischarge detection voltage	Overdischarge release voltage	Discharging overcurrent detection voltage	Charging overcurrent detection voltage	Short detection voltage	Overcharge detection delay time	Overdischarge detection delay time	Discharging overcurrent detection delay time	Charging overcurrent detection delay time	Short detection delay time
		※1	※2			Vdet1	Vrel1	Vdet2	Vrel2	Vdet3	Vdet4	Vshort	tVdet1	tVdet2	tVdet3	tVdet4	tshort
						V	V	V	V	V	V	V	s	ms	ms	ms	us
MM3280A01RRE	SSON6J	○	○	○	○	4.300	4.100	2.300	2.300	0.105	-0.100	0.9	4.500	125	12	16	400
MM3280A01YRE	SON6C	○	○	○	○	4.300	4.100	2.300	2.300	0.105	-0.100	0.9	4.500	125	12	16	400
MM3280B04RRE	SSON6J	×	○	○	○	4.445	4.245	2.300	2.300	0.060	-0.070	0.9	4.500	96	12	8	400
MM3280B05RRE	SSON6J	×	○	○	○	4.445	4.245	2.300	2.300	0.050	-0.070	0.3	4.500	96	160	8	400
MM3280B07RRE	SSON6J	×	○	○	○	4.445	4.245	2.300	2.300	0.055	-0.060	0.3	1.000	96	12	10	300
MM3280C01RRE	SSON6K	○	○	○	×	4.225	4.025	2.800	2.800	0.150	-0.150	0.9	1.000	96	12	6	400
MM3280C01NRH	SOT26A/B	○	○	○	×	4.225	4.025	2.800	2.800	0.150	-0.150	0.9	1.000	96	12	6	400
MM3280C04RRE	SSON6K	○	○	○	×	4.275	4.175	2.300	2.300	0.150	-0.150	0.9	1.000	96	12	6	400
MM3280C05RRE	SSON6K	○	○	○	×	4.375	4.275	2.300	2.300	0.200	-0.150	0.9	1.000	96	12	6	400
MM3280D01NRH	SOT25A	○	○	×	×	4.275	4.075	2.800	3.100	0.100	-0.100	0.9	0.250	144	16	8	400
MM3280E01YRE	SON6C	○	○	×	×	4.275	4.275	2.300	2.300	0.100	-0.100	0.9	1.000	20	6	8	400
MM3280EA1YRE	SON6C	○	○	×	×	4.275	4.075	2.500	2.900	0.130	-0.130	0.7	1.024	96	12	8	300
MM3280EA2RRE	SSON6J	○	○	×	×	4.425	4.225	2.500	2.900	0.130	-0.130	0.7	1.024	96	12	8	300
MM3280EA3YRE	SON6C	○	○	×	×	4.415	4.215	2.500	2.900	0.100	-0.100	0.3	1.024	96	12	8	300
MM3280EA4YRE	SON6C	○	○	×	×	4.425	4.225	3.000	3.200	0.130	-0.130	0.7	1.024	96	12	8	300
MM3280EA5YRE	SON6C	○	○	×	×	4.425	4.225	2.800	3.000	0.130	-0.130	0.7	1.024	96	12	8	300
MM3280EA6YRE	SON6C	○	○	×	×	4.420	4.220	2.500	2.900	0.050	-0.040	0.3	1.024	64	12	8	300
MM3280EA9YRE	SON6C	○	○	×	×	4.425	4.225	2.500	2.800	0.130	-0.100	0.5	1.024	32	8	8	250
MM3280EAAYRE	SON6C	○	○	×	×	4.425	4.225	2.500	2.900	0.200	-0.150	0.5	1.024	96	12	10	300
MM3280EACNRH	SOT26A/B	○	○	×	×	4.400	4.200	2.500	2.900	0.250	-0.150	0.5	1.024	96	12	8	300
MM3280EADYRE	SON6C	○	○	×	×	4.425	4.225	2.400	3.000	0.175	-0.130	0.8	1.024	20	12	8	300
MM3280EAFYRE	SON6C	○	○	×	×	4.475	4.275	2.500	2.900	0.100	-0.100	0.3	1.024	96	12	8	300
MM3280EAGYRE	SON6C	○	○	×	×	4.475	4.275	2.500	2.900	0.080	-0.080	0.3	1.024	96	12	8	300
MM3280EAHYRE	SON6C	○	○	×	×	4.475	4.275	2.500	2.900	0.050	-0.050	0.3	1.024	96	12	8	300
MM3280EAKYRE	SON6C	○	○	×	×	4.475	4.275	2.500	2.600	0.200	-0.150	0.7	1.024	96	12	8	300
MM3280EAMYRE	SON6C	○	○	×	×	4.475	4.275	2.500	2.900	0.130	-0.125	0.38	1.024	64	8	8	250
MM3280EANYRE	SON6C	○	○	×	×	4.425	4.225	2.800	3.000	0.050	-0.050	0.4	1.024	96	12	8	300
MM3280EASYRE	SON6C	○	○	×	×	4.425	4.225	2.500	2.900	0.130	-0.130	0.7	1.024	96	8	8	300
MM3280EAVYRE	SON6C	○	○	×	×	4.425	4.225	2.500	2.800	0.190	-0.150	0.5	1.024	32	8	8	250
MM3280EAWYRE	SON6C	○	○	×	×	4.475	4.275	2.500	2.600	0.130	-0.100	0.5	1.024	96	12	8	300
MM3280EAYYRE	SON6C	○	○	×	×	4.475	4.275	2.500	2.600	0.080	-0.060	0.3	1.024	96	12	8	300
MM3280EB1RRE	SSON6J	×	○	×	×	4.425	4.225	2.500	2.900	0.130	-0.130	0.7	1.024	96	12	8	300
MM3280EB2YRE	SON6C	×	○	×	×	4.415	4.215	2.500	2.900	0.100	-0.100	0.3	1.024	96	12	8	300
MM3280EB3YRE	SON6C	×	○	×	×	4.450	4.250	2.500	2.900	0.100	-0.100	0.3	1.024	96	12	8	300
MM3280EB4YRE	SON6C	×	○	×	×	4.420	4.220	2.500	2.900	0.050	-0.040	0.3	1.024	64	12	8	300
MM3280EB5YRE	SON6C	×	○	×	×	4.475	4.275	2.500	2.900	0.130	-0.100	0.3	1.024	96	12	8	300
MM3280EB7YRE	SON6C	×	○	×	×	4.400	4.200	2.500	2.900	0.250	-0.250	0.5	1.024	96	12	8	300
MM3280EBAYRE	SON6C	×	○	×	×	4.475	4.275	2.500	2.900	0.110	-0.100	0.3	1.024	96	12	8	300
MM3280EC3NRH	SOT26A/B	○	○	×	×	4.425	4.225	2.500	2.800	0.130	-0.130	0.5	1.024	96	10	10	280
MM3280EC5NRH	SOT26A/B	○	○	×	×	4.475	4.275	2.500	2.900	0.150	-0.150	0.5	1.024	64	8	8	280
MM3280EC6NRH	SOT26A/B	○	○	×	×	4.280	4.080	2.400	2.800	0.235	-0.100	0.5	1.024	96	10	10	280
MM3280EC7NRH	SOT26A/B	○	○	×	×	4.280	4.080	2.800	3.000	0.200	-0.100	0.5	1.024	96	10	10	280
MM3280EG1RRE	SSON6J	×	○	×	×	4.475	4.375	2.000	2.000	0.075	-0.075	0.5	0.576	144	4.25	4	300
MM3280EJ1NRH	SOT26A/B	×	○	×	×	4.280	4.080	2.800	2.800	0.150	-0.100	0.5	1.216	144	8	8	320
MM3280EL1NRH	SOT26A/B	○	○	×	×	4.400	4.200	3.250	3.250	0.200	-0.150	0.5	1.024	128	8	8	250

※1 0V battery charge function　　○ : Permission　　× : Prohibition
※2 Optional functions　　○ : Provided.　　× : Not provided.

Please inquire to us, if you request a rank other than the above.

Selection guide

MODEL	Package	Optional function				Detection / Release voltage							Detection delay time				
		0V battery charge function	Charging overcurrent detection	Over voltage charger detection	Overcharge detection delay timer reset time	Overcharge detection voltage	Overcharge release voltage	Overdischarge detection voltage	Overdischarge release voltage	Discharging overcurrent detection voltage	Charging overcurrent detection voltage	Short detection voltage	Overcharge detection delay time	Overdischarge detection delay time	Discharging overcurrent detection delay time	Charging overcurrent detection delay time	Short detection delay time
		※1	※2			Vdet1	Vrel1	Vdet2	Vrel2	Vdet3	Vdet4	Vshort	tVdet1	tVdet2	tVdet3	tVdet4	tshort
						V	V	V	V	V	V	V	s	ms	ms	ms	us
MM3280F02RRE	SSON6J	○	×	○	×	4.300	4.100	2.300	2.300	0.130	-	0.9	1.000	24	12	-	400
MM3280G01RRE	SSON6J	×	×	○	×	4.280	4.100	2.300	2.300	0.050	-	0.9	1.000	24	12	-	400
MM3280G02RRE	SSON6J	×	×	○	×	4.280	4.100	2.800	2.800	0.050	-	0.9	1.000	24	12	-	400
MM3280H01NRH	SOT26A/B	○	×	○	×	4.275	4.175	3.000	3.200	0.150	-	0.9	1.000	125	12	-	400
MM3280H02NRH	SOT26A/B	○	×	○	×	4.280	4.100	2.300	2.500	0.150	-	0.9	1.000	24	12	-	400
MM3280H03NRH	SOT26A/B	○	×	○	×	4.215	4.115	2.800	2.900	0.150	-	0.9	1.000	24	12	-	400
MM3280H04NRH	SOT26A/B	○	×	○	×	3.800	3.600	2.300	2.500	0.100	-	0.9	1.000	125	12	-	400
MM3280HB6YRE	SON6C	○	×	○	×	4.450	4.265	2.500	2.700	0.200	-	0.9	1.000	24	12	-	400
MM3280I01NRH	SOT26A/B	○	×	○	×	4.250	4.050	2.500	3.000	0.150	-	0.9	1.000	24	12	-	400
MM3280I02NRH	SOT26A/B	○	×	○	×	4.250	4.050	2.500	3.000	0.100	-	0.9	1.000	24	12	-	400
MM3280I04NRH	SOT26A/B	○	×	○	×	4.250	4.050	2.500	3.000	0.150	-	0.9	1.000	512	288	-	400
MM3280J01NRH	SOT26A/B	○	○	×	×	4.250	4.050	2.500	3.000	0.200	-0.100	0.8	1.000	20	12	8	300
MM3280J03NRH	SOT26A/B	○	○	×	×	3.800	3.600	2.000	2.380	0.100	-0.100	0.8	1.000	96	20	12	300
MM3280J04NRH	SOT26A/B	○	○	×	×	4.275	4.215	3.000	3.200	0.150	-0.100	0.8	1.000	96	20	12	300
MM3280J05NRH	SOT26A/B	○	○	×	×	4.250	4.190	2.800	3.000	0.150	-0.100	0.8	1.000	96	20	12	300
MM3280J07NRH	SOT26A/B	○	○	×	×	4.250	4.190	2.500	3.000	0.100	-0.100	0.7	1.000	96	20	12	300
MM3280J12NRH	SOT26A/B	○	○	×	×	4.280	4.100	2.300	2.500	0.200	-0.200	0.8	1.000	20	12	8	300
MM3280J16NRH	SOT26A/B	○	○	×	×	4.280	4.230	2.500	3.000	0.100	-0.100	0.7	1.000	96	20	12	300
MM3280J17NRH	SOT26A/B	○	○	×	×	3.900	3.800	2.000	2.500	0.100	-0.100	0.6	1.200	144	32	12	300
MM3280J18NRH	SOT26A/B	○	○	×	×	4.250	4.190	3.000	3.200	0.150	-0.100	0.8	1.000	96	20	12	300
MM3280JA1YRE	SON6C	○	○	×	×	4.425	4.225	2.500	2.900	0.130	-0.130	0.7	1.000	96	12	10	300
MM3280JB1NRH	SOT26A/B	○	○	×	×	4.425	4.225	2.500	2.900	0.130	-0.130	0.7	1.000	96	12	10	300
MM3280JB2NRH	SOT26A/B	○	○	×	×	4.350	4.150	2.500	2.900	0.200	-0.100	0.7	1.000	96	12	10	300
MM3280JB3NRH	SOT26A/B	○	○	×	×	4.375	4.275	2.800	3.000	0.170	-0.150	0.7	1.000	96	12	10	300
MM3280JB4NRH	SOT26A/B	○	○	×	×	4.375	4.175	2.300	2.700	0.150	-0.150	0.7	1.000	96	12	10	300
MM3280JB5NRH	SOT26A/B	○	○	×	×	4.400	4.300	2.800	3.000	0.150	-0.150	0.7	1.000	96	12	10	300
MM3280JB7NRH	SOT26A/B	○	○	×	×	4.425	4.225	2.500	2.900	0.160	-0.160	0.7	1.000	96	12	10	300
MM3280JC1YRE	SON6C	○	○	×	×	4.380	4.180	2.600	3.000	0.180	-0.130	0.9	1.000	96	12	10	300
MM3280JC2YRE	SON6C	×	○	×	×	4.425	4.225	2.500	2.900	0.130	-0.130	0.7	1.000	96	12	10	300
MM3280JC3YRE	SON6C	×	○	×	×	4.425	4.225	2.500	2.900	0.210	-0.130	0.3	1.000	96	12	10	300
MM3280JD2YRE	SON6C	×	○	×	×	4.425	4.225	2.500	2.900	0.130	-0.130	0.7	1.000	96	12	10	300
MM3280JD4YRE	SON6C	×	○	×	×	4.425	4.225	2.300	2.650	0.170	-0.130	0.7	1.000	96	12	10	300
MM3280JD5NRH	SOT26A/B	×	○	×	×	4.250	4.100	3.000	3.200	0.100	-0.100	0.6	1.000	96	16	12	300
MM3280JF1YRE	SON6C	○	○	×	×	4.425	4.225	2.500	2.500	0.100	-0.100	0.5	1.000	96	12	10	300
MM3280JF2YRE	SON6C	○	○	×	×	4.425	4.225	2.500	2.500	0.150	-0.100	0.5	1.000	96	12	10	300
MM3280JF3NRH	SOT25A	○	○	×	×	4.280	4.080	2.800	2.800	0.150	-0.100	0.5	0.250	144	18	10	300
MM3280JH1YRE	SON6C	○	○	×	×	4.415	4.215	2.500	2.900	0.045	-0.045	0.3	1.000	96	12	10	300
MM3280JH1RRE	SSON6J	○	○	×	×	4.415	4.215	2.500	2.900	0.045	-0.045	0.3	1.000	96	12	10	300
MM3280JH2YRE	SON6C	○	○	×	×	4.415	4.215	2.500	2.900	0.080	-0.080	0.3	1.000	96	12	10	300
MM3280JH2RRE	SSON6J	○	○	×	×	4.415	4.215	2.500	2.900	0.080	-0.080	0.3	1.000	96	12	10	300
MM3280JH3YRE	SON6C	○	○	×	×	4.425	4.200	2.300	2.800	0.100	-0.060	0.3	1.000	96	12	10	300
MM3280JH4YRE	SON6C	○	○	×	×	4.425	4.200	2.300	2.800	0.055	-0.060	0.25	1.000	96	12	10	300
MM3280JH5YRE	SON6C	○	○	×	×	4.470	4.270	2.500	2.900	0.130	-0.130	0.4	1.000	96	12	10	300
MM3280JH6NRH	SOT26A/B	○	○	×	×	4.375	4.275	2.800	3.000	0.200	-0.150	0.6	1.000	96	12	10	300
MM3280JH7NRH	SOT26A/B	○	○	×	×	4.425	4.325	2.800	3.000	0.200	-0.150	0.6	1.000	96	12	10	300

※1 0V battery charge function　　○ : Permission　　× : Prohibition
※2 Optional functions　　○ : Provided.　　× : Not provided.

Please inquire to us, if you request a rank other than the above.

Selection guide

MODEL	Package	Optional function				Detection / Release voltage							Detection delay time				
		0V battery charge function	Charging overcurrent detection	Over voltage charger detection	Overcharge detection delay timer reset time	Overcharge detection voltage	Overcharge release voltage	Overdischarge detection voltage	Overdischarge release voltage	Discharging overcurrent detection voltage	Charging overcurrent detection voltage	Short detection voltage	Overcharge detection delay time	Overdischarge detection delay time	Discharging overcurrent detection delay time	Charging overcurrent detection delay time	Short detection delay time
		※1	※2			Vdet1	Vrel1	Vdet2	Vrel2	Vdet3	Vdet4	Vshort	tVdet1	tVdet2	tVdet3	tVdet4	tshort
						V	V	V	V	V	V	V	s	ms	ms	ms	us
MM3280JH8NRH	SOT26A/B	○	○	×	×	4.280	4.080	2.800	3.000	0.150	-0.150	0.5	1.200	144	9	8	320
MM3280JHANRH	SOT26A/B	○	○	×	×	4.475	4.275	2.500	2.600	0.200	-0.150	0.7	1.000	96	12	8	300
MM3280JL1YRE	SON6C	×	○	×	×	4.400	4.200	2.900	2.900	0.100	-0.100	0.4	1.000	96	12	10	300
MM3280JL2YRE	SON6C	×	○	×	×	4.425	4.225	2.500	2.500	0.180	-0.125	0.5	1.000	32	8	8	250
MM3280JM1YRE	SON6C	×	○	×	×	4.400	4.200	2.900	2.900	0.100	-0.100	0.4	1.000	96	12	10	300
MM3280JP1NRH	SOT26A/B	○	○	×	×	4.250	4.150	2.800	3.000	0.100	-0.050	0.45	1.000	1,000	500	1,000	400
MM3280JP2NRH	SOT26A/B	○	○	×	×	4.200	4.100	2.800	3.000	0.100	-0.050	0.45	1.000	1,000	500	1,000	400
MM3280JP3NRH	SOT26A/B	○	○	×	×	4.250	4.150	2.500	3.000	0.150	-0.080	0.45	1.000	3,000	1,000	1,000	400
MM3280JP4NRH	SOT26A/B	○	○	×	×	4.250	4.150	2.800	3.000	0.150	-0.080	0.45	1.000	3,000	1,000	1,000	400
MM3280N01YRE	SON6C	○	○	×	×	4.280	4.180	2.300	2.300	0.160	-0.160	0.9	1.000	96	20	16	400
MM3280P09RRE	SSON6J	×	○	×	×	4.280	4.180	2.700	2.700	0.065	-0.075	0.9	1.000	96	20	18	400
MM3280P10RRE	SSON6J	×	○	×	×	4.280	4.100	2.300	2.300	0.170	-0.170	0.9	1.000	24	12	4	400
MM3280P12RRE	SSON6E	○	○	×	×	4.280	4.100	2.300	2.300	0.150	-0.220	0.9	1.000	24	12	4	400
MM3280P16RRE	SSON6J	×	○	×	×	4.280	4.100	2.300	2.300	0.160	-0.150	0.9	1.000	24	12	4	400
MM3280P17RRE	SSON6J	×	○	×	×	4.280	4.100	2.300	2.300	0.120	-0.120	0.9	1.000	24	12	4	400
MM3280P18RRE	SSON6J	○	○	×	×	4.420	4.240	3.000	3.000	0.150	-0.220	0.9	1.000	24	12	4	400
MM3280P20RRE	SSON6J	×	○	×	×	4.280	4.100	2.300	2.300	0.200	-0.120	0.9	1.000	24	12	4	400
MM3280P21RRE	SSON6J	×	○	×	×	4.430	4.190	2.300	2.300	0.240	-0.250	0.9	1.000	24	12	4	400
MM3280P22RRE	SSON6J	×	○	×	×	4.420	4.240	2.300	2.300	0.210	-0.220	0.9	1.000	24	12	4	400
MM3280P23RRE	SSON6J	○	○	×	×	4.430	4.250	2.300	2.300	0.120	-0.120	0.9	1.000	24	12	4	400
MM3280P25RRE	SSON6J	×	○	×	×	4.280	4.100	2.300	2.300	0.160	-0.100	0.9	1.000	128	24	4	400
MM3280P26RRE	SSON6J	×	○	×	×	4.420	4.240	2.300	2.300	0.170	-0.170	0.9	1.000	24	12	4	400
MM3280P33RRE	SSON6J	×	○	×	×	4.430	4.230	2.700	2.700	0.080	-0.080	0.5	1.000	24	12	4	400
MM3280PA1RRE	SSON6J	×	○	×	×	4.420	4.420	2.300	2.300	0.115	-0.130	0.9	1.000	24	12	4	400
MM3280PA6RRE	SSON6J	○	○	×	×	4.370	4.370	2.300	2.300	0.140	-0.130	0.5	1.000	24	12	4	400
MM3280PA7RRE	SSON6J	×	○	×	×	4.430	4.430	2.800	2.800	0.080	-0.080	0.5	1.000	24	12	4	400
MM3280PA9RRE	SSON6J/6M	×	○	×	×	4.280	4.280	2.700	2.700	0.070	-0.090	0.5	1.000	24	12	4	400
MM3280S01NRH	SOT26A/B	○	×	○	×	4.280	4.080	3.000	3.000	0.080	-	0.9	1.200	144	8	-	400
MM3280S02RRE	SSON6J	○	×	○	×	4.300	4.100	3.000	3.000	0.250	-	0.9	1.200	144	8	-	400
MM3280SB9YRE	SON6C	×	○	×	×	4.475	4.275	2.500	2.900	0.160	-0.125	0.7	1.000	96	12	8	300
MM3280T01NRH	SOT26A/B	×	○	×	×	4.280	4.280	2.800	2.800	0.050	-0.100	0.9	1.000	20	6	8	200
MM3280T02RRE	SSON6J	×	○	×	×	4.280	4.280	2.800	2.800	0.050	-0.100	0.9	1.000	20	6	8	200
MM3280T03NRH	SOT26A/B	×	○	×	×	3.670	3.670	2.050	2.050	0.050	-0.060	0.4	1.000	96	96	96	400
MM3280T04NRH	SOT26A/B	×	○	×	×	4.280	4.280	2.400	2.400	0.050	-0.060	0.4	1.000	96	96	96	400
MM3280W01NRH	SOT26A/B	○	○	○	×	4.280	4.280	2.300	2.500	0.150	-0.150	0.9	1.000	24	12	8	400
MM3280W06NRH	SOT26A/B	×	○	○	×	4.325	4.325	2.500	2.900	0.150	-0.150	0.7	1.000	24	12	8	400
MM3280W07NRH	SOT26A/B	○	○	○	×	4.350	4.350	2.300	2.500	0.150	-0.150	0.7	1.000	24	12	8	400

※1 0V battery charge function　○ : Permission　× : Prohibition
※2 Optional functions　○ : Provided.　× : Not provided.

Please inquire to us, if you request a rank other than the above.

Typical application circuit

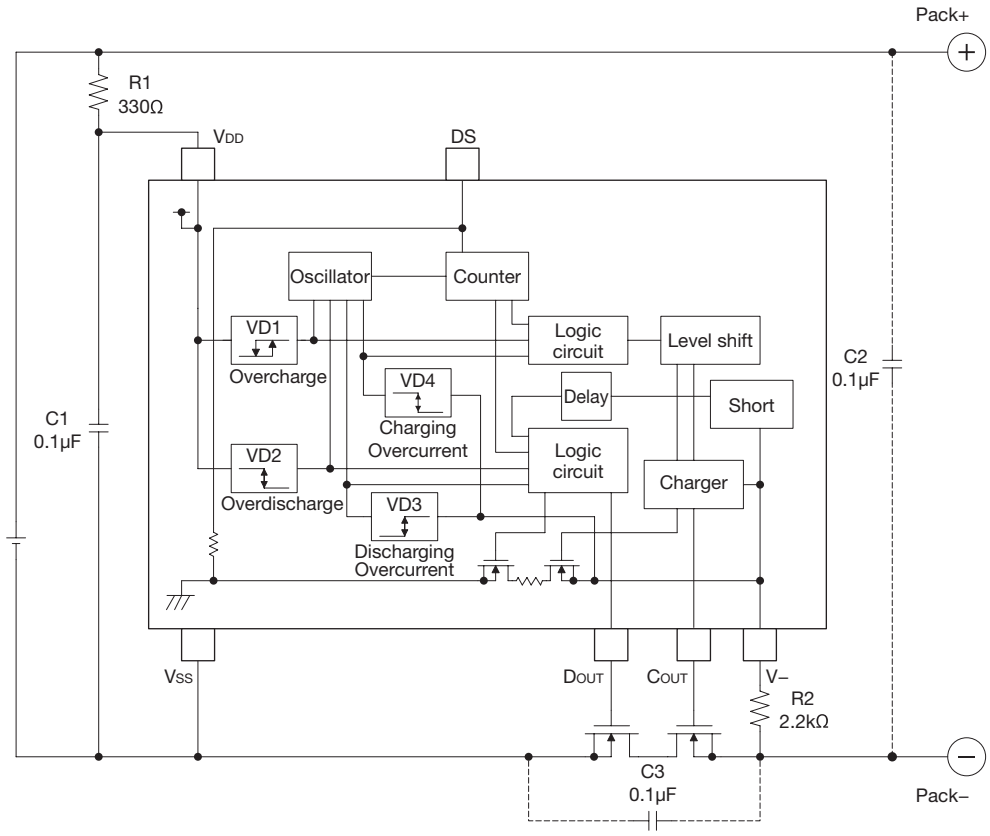

- R1 and C1 stabilize a supply voltage ripple. However, the detection voltage rises by the current of penetration in IC of the voltage detection when R1 is enlarged, and the value of R1 is adjusted to 1kohm or less. Moreover, adjust the value of C1 to 0.01μF or more to do the stability operation, please.

- R1 and R2 resistors are current limit resistance if a charger is connected reversibly or a high-voltage charger that exceeds the absolute maximum rating is connected. R1 and R2 may cause a power consumption will be over rating of power dissipation, therefore the “R1+R2” should be more than 1kohm. Moreover, if R2 is too enlarged, the charger connection release cannot be occasionally done after the overdischarge is detected, so adjust the value of R2 to 10kohm or less, please.

- C2 and C3 capacitors have effect that the system stability about voltage ripple or imported noise. After check characteristics, decide that these capacitors should be inserted or not, where should be inserted, and capacitance value, please.

1 cell lithium–ion/lithium–polymer battery protection IC

MM3511 Series

Outline

MM3511 series are protection IC using high voltage CMOS process for protection of the rechargeable lithium–ion or lithium–polymer battery. The overcharge, overdischarge, discharging overcurrent, charging overcurrent, and short protection of the rechargeable one-cell lithium-ion or lithium-polymer battery can be detected.

Features

(Unless otherwise specified, Ta=25°C)

(1) Range and accuracy of detection/release voltage

- Overcharge detection voltage ..... 4.0V to 4.5V, 5mV steps ..... Accuracy±20mV
  Accuracy±25mV (Topr=-5 to +60°C)
- Overcharge release voltage ..... 3.9V to 4.5V, 50mV steps ..... Accuracy±30mV
- Overdischarge detection voltage..... 2.0V to 3.0V, 50mV steps ..... Accuracy±35mV
- Overdischarge release voltage ..... 2.0V to 3.5V, 50mV steps ..... Accuracy±100mV
- Discharging overcurrent detection voltage..... 50mV to 300mV, 5mV steps ..... Accuracy±10mV
- Charging overcurrent detection voltage ..... -300mV to -50mV, 5mV steps ..... Accuracy±20mV
- Short detection voltage ..... 0.5V standard ..... Accuracy±100mV

(2) Range of detection delay time

- Overcharge detection delay time..... Selection from 143ms, 573ms, 1.0s, 1.2s
- Overdischarge detection delay time..... Selection from 38ms, 64ms, 75ms, 150ms, 300ms
- Discharging overcurrent detection delay time... Selection from 4.5ms, 8ms, 9ms, 12ms, 18ms
- Charging overcurrent detection delay time ..... Selection from 4.5ms, 6ms, 8ms, 9ms
- Short detection delay time ..... 300μs, 400μs standard

(3) 0V battery charge function ..... Selection from “Permission” or “Prohibition”

(4) Low current consumption

- Normal mode..... Typ. 3.0μA, Max. 5.5μA
- Stand-by mode..... Max. 0.1μA

(5) Absolute maximum ratings

- VDD pin..... VSS-0.3V to +12V
- COUT pin and V– pin ..... VDD-28V to VDD+0.3V
- DOUT pin..... VSS-0.3V to VDD+0.3V
- Storage temperature..... -55 to +125°C
- Operation temperature ..... -40 to +85°C

Pin assignment

SSON-6J

(Top view)

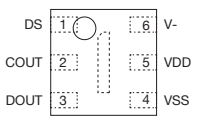

SSON-6A

(Top view)

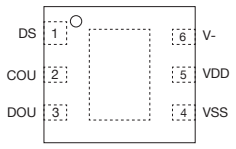

SON-6C

(Top view)

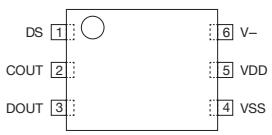

Pin no.	Symbol	Function
1	DS	Delay shorten terminal
2	COUT	Output of overcharge detection (Output type is CMOS)
3	DOUT	Output of overdischarge detection (Output type is CMOS)
4	VSS	VSS terminal (Connected to ground)
5	VDD	VDD terminal (Connected to IC substrait)
6	V-	Input terminal connected to charger negative voltage

Selection guide

Product name	Package	Detection / Release voltage						0V battery charge function	Delay time combination *1	Current consumption at stand-by (MAX)[μA]
		Overcharge detection voltage [V]	Overcharge release voltage [V]	Overdischarge detection voltage[V]	Overdischarge release voltage [V]	Discharging overcurrent detection voltage [V]	Charging overcurrent detection voltage [V]			
		Vdet1	Vrel1	Vdet2	Vrel2	Vdet3	Vdet4			
MM3511A16Y	SON–6C	4.275	4.175	2.300	2.400	0.100	–0.100	Permission	1	0.1
MM3511A26Y	SON–6C	4.280	4.080	2.300	2.300	0.080	–0.100	Permission	1	0.1
MM3511A36Y	SON–6C	4.280	4.080	2.300	2.300	0.100	–0.100	Permission	1	0.1
MM3511A46Y	SON–6C	4.275	4.075	2.300	2.300	0.150	–0.100	Permission	1	0.1
MM3511A56Y	SON–6C	4.280	4.280	2.800	2.800	0.050	–0.100	Permission	1	0.1
MM3511A66Y	SON–6C	4.280	4.280	3.000	3.000	0.075	–0.100	Permission	1	0.1
MM3511A76Y	SON–6C	4.275	4.175	2.300	2.400	0.050	–0.100	Permission	1	0.1
MM3511A86Y	SON–6C	4.300	4.100	2.300	2.300	0.130	–0.100	Permission	1	0.1
MM3511AA6Y	SON–6C	4.225	4.025	2.800	2.800	0.150	–0.100	Permission	9	0.1
MM3511AB6Y	SON–6C	4.225	4.025	3.000	3.000	0.060	–0.060	Permission	9	0.1
MM3511B16Y	SON–6C	3.900	3.800	2.300	2.400	0.100	–0.100	Permission	1	0.1
MM3511B26Y	SON–6C	3.950	3.850	2.300	2.400	0.100	–0.100	Permission	1	0.1
MM3511B36Y	SON–6C	4.000	3.900	2.300	2.400	0.100	–0.100	Permission	1	0.1
MM3511B46Y	SON–6C	4.050	3.950	2.300	2.400	0.100	–0.100	Permission	1	0.1
MM3511B56Y	SON–6C	4.100	4.000	2.300	2.400	0.100	–0.100	Permission	1	0.1
MM3511C16Y	SON–6C	4.280	4.080	2.300	2.300	0.100	–0.100	Prohibition	1	0.1
MM3511C26Y	SON–6C	4.280	4.080	2.300	2.300	0.130	–0.100	Prohibition	1	0.1
MM3511C36Y	SON–6C	4.280	4.130	2.600	3.100	0.150	–0.100	Prohibition	1	0.1
MM3511C46Y	SON–6C	4.280	4.130	2.800	3.100	0.150	–0.100	Prohibition	1	0.1
MM3511C56Y	SON–6C	4.200	4.100	2.800	2.900	0.150	–0.100	Prohibition	1	0.1
MM3511C66Y	SON–6C	4.280	4.130	2.800	3.100	0.100	–0.100	Prohibition	1	0.1
MM3511C76Y	SON–6C	4.280	4.130	2.800	3.100	0.050	–0.100	Prohibition	1	0.1
MM3511C96Y	SON–6C	4.280	4.130	2.800	2.800	0.150	–0.100	Prohibition	1	0.1
MM3511CA6Y	SON–6C	4.225	4.025	2.300	2.300	0.150	–0.120	Prohibition	1	0.1
MM3511CC6Y	SON–6C	4.280	4.130	2.800	3.100	0.150	–0.100	Prohibition	1	0.1
MM3511E16Y	SON–6C	4.325	4.075	2.500	2.900	0.150	–0.100	Permission	2	0.1
MM3511G16Y	SON–6C	4.350	4.150	2.300	3.000	0.200	–0.100	Permission	3	0.1
MM3511H16Y	SON–6C	4.280	4.180	2.300	2.300	0.120	–0.100	Permission	4	0.1
MM3511H26Y	SON–6C	4.275	4.075	2.800	3.100	0.100	–0.100	Permission	4	0.1
MM3511H46Y	SON–6C	4.275	4.175	2.400	2.400	0.100	–0.100	Permission	4	0.1
MM3511H56Y	SON–6C	4.280	4.180	2.300	2.300	0.090	–0.075	Permission	4	0.1
MM3511K16Y	SON–6C	4.275	4.275	2.300	2.300	0.100	–0.100	Permission	5	0.1
MM3511K26R	SSON–6J	4.275	4.075	2.300	2.300	0.120	–0.100	Permission	5	0.1
MM3511K26Y	SON–6C	4.275	4.075	2.300	2.300	0.120	–0.100	Permission	5	0.1
MM3511K36R	SSON–6A	4.275	4.075	2.300	2.300	0.130	–0.100	Permission	5	0.1
MM3511K36R	SSON–6J	4.275	4.075	2.300	2.300	0.130	–0.100	Permission	5	0.1
MM3511K36Y	SON–6C	4.275	4.075	2.300	2.300	0.130	–0.100	Permission	5	0.1
MM3511K46R	SSON–6J	4.275	4.075	2.300	2.300	0.150	–0.100	Permission	5	0.1

SON-6C ... 5,000pcs/Reel, SSON-6J ... 3,000pcs/Reel

*1: Delay time combination

		1	2	3	4	5	6	7	8	9	10	11
Overcharge detection delay time	tVdet1	1.2s	1.2s	143ms	1.2s	1.2s	1.2s	573ms	1.0s	1.2s	1.0s	1.2s
Overdischarge detection delay time	tVdet2	150ms	150ms	38ms	150ms	38ms	150ms	150ms	96ms	75ms	64ms	150ms
Discharging overcurrent detection delay time	tVdet3	9ms	9ms	18ms	18ms	9ms	4.5ms	4.5ms	12ms	9ms	8ms	4.5ms
Charging overcurrent detection delay time	tVdet4	9ms	9ms	9ms	9ms	9ms	9ms	4.5ms	6ms	9ms	8ms	9ms
Short detection delay time	tshort	300μs	400μs	300μs	300μs	300μs	300μs	300μs	400μs	300μs	250μs	300μs

Please inquire to us, if you request a rank other than the above.

Selection guide

Product name	Package	Detection / Release voltage						0V battery charge function	Delay time combination *1	Current consumption at stand-by (MAX)[μA]
		Overcharge detection voltage [V]	Overcharge release voltage [V]	Overdischarge detection voltage[V]	Overdischarge release voltage [V]	Discharging overcurrent detection voltage [V]	Charging overcurrent detection voltage [V]			
		Vdet1	Vrel1	Vdet2	Vrel2	Vdet3	Vdet4			
MM3511K46Y	SON-6C	4.275	4.075	2.300	2.300	0.150	-0.100	Permission	5	0.1
MM3511K56Y	SON-6C	4.275	4.275	2.300	2.300	0.050	-0.100	Permission	5	0.1
MM3511K66R	SSON-6J	4.270	4.070	2.300	2.300	0.100	-0.100	Permission	5	0.1
MM3511K66Y	SON-6C	4.270	4.070	2.300	2.300	0.100	-0.100	Permission	5	0.1
MM3511K76Y	SON-6C	4.275	4.075	2.300	2.300	0.130	-0.130	Permission	5	0.1
MM3511K86R	SSON-6J	4.275	4.075	2.600	2.600	0.110	-0.085	Permission	5	0.1
MM3511K86Y	SON-6C	4.275	4.075	2.600	2.600	0.110	-0.085	Permission	5	0.1
MM3511K96Y	SON-6C	4.275	4.075	2.600	2.600	0.190	-0.085	Permission	5	0.1
MM3511L16R	SSON-6J	4.275	4.075	2.600	2.600	0.100	-0.085	Permission	5	0.1
MM3511L16Y	SON-6C	4.275	4.075	2.600	2.600	0.100	-0.085	Permission	5	0.1
MM3511L36R	SSON-6J	4.275	4.075	2.600	2.600	0.180	-0.120	Permission	5	0.1
MM3511L36Y	SON-6C	4.275	4.075	2.600	2.600	0.180	-0.120	Permission	5	0.1
MM3511L56Y	SON-6C	4.350	4.150	2.300	2.300	0.130	-0.100	Permission	5	0.1
MM3511L66Y	SON-6C	4.275	4.075	2.600	2.600	0.150	-0.100	Permission	5	0.1
MM3511L76Y	SON-6C	4.275	4.275	2.300	2.300	0.125	-0.100	Permission	5	0.1
MM3511L86Y	SON-6C	4.275	4.075	2.600	2.600	0.100	-0.080	Prohibition	5	0.1
MM3511L96Y	SON-6C	4.275	4.275	2.600	2.600	0.100	-0.080	Prohibition	5	0.1
MM3511LA6Y	SON-6C	4.375	4.375	3.000	3.000	0.150	-0.150	Prohibition	5	0.1
MM3511M16RR	SSON-6A	4.275	4.275	2.500	2.500	0.160	-0.100	Prohibition	1	0.1
MM3511M16RL	SSON-6A	4.275	4.275	2.500	2.500	0.160	-0.100	Prohibition	1	0.1
MM3511M16YR	SON-6C	4.275	4.275	2.500	2.500	0.160	-0.100	Prohibition	1	0.1
MM3511M16YL	SON-6C	4.275	4.275	2.500	2.500	0.160	-0.100	Prohibition	1	0.1
MM3511N16Y	SON-6C	4.280	4.080	2.400	2.400	0.050	-0.100	Prohibition	11	0.1
MM3511P16Y	SON-6C	4.225	4.125	2.000	2.000	0.200	-0.100	Prohibition	7	0.1
MM3511W16Y	SON-6C	4.225	4.025	2.500	2.900	0.150	-0.150	Permission	8	0.1
MM3511W26Y	SON-6C	4.375	4.175	2.400	2.800	0.145	-0.145	Permission	6	0.1
MM3511WA6Y	SON-6C	4.390	4.190	2.500	2.500	0.130	-0.125	Prohibition	10	0.1
MM3511WB6Y	SON-6C	4.390	4.190	2.500	2.500	0.200	-0.125	Prohibition	10	0.1

SSON-6J ... 3,000pcs/Reel
SON-6C ... 5,000pcs/Reel

*1: Delay time combination		1	2	3	4	5	6	7	8	9	10	11
Overcharge detection delay time	tVdet1	1.2s	1.2s	143ms	1.2s	1.2s	1.2s	573ms	1.0s	1.2s	1.0s	1.2s
Overdischarge detection delay time	tVdet2	150ms	150ms	38ms	150ms	38ms	150ms	150ms	96ms	75ms	64ms	150ms
Discharging overcurrent detection delay time	tVdet3	9ms	9ms	18ms	18ms	9ms	4.5ms	4.5ms	12ms	9ms	8ms	4.5ms
Charging overcurrent detection delay time	tVdet4	9ms	9ms	9ms	9ms	9ms	9ms	4.5ms	6ms	9ms	8ms	9ms
Short detection delay time	tshort	300μs	400μs	300μs	300μs	300μs	300μs	300μs	400μs	300μs	250μs	300μs

Please inquire to us, if you request a rank other than the above.

1 cell lithium–ion/lithium–polymer battery protection IC

MM3638 Series

Outline

MM3638 series are protection IC for lithium–ion and lthium–polymer battery. MM3638 protects the battery pack from overcharge, overdischarge, and overcurrent, etc. by controlling FET SW.

In the One–cell battery pack, on resistance of the FET SW has been used for overcurrent detection. MM3638 realize overcurrent protection with high accuracy and with no temperature dependence by using a chip resistor.

Features

(Unless otherwise specified, Ta=25°C)

(1) Range and accuracy of detection/release voltage

- Overcharge detection voltage.....4.0V to 4.5V, 5mV steps ..... Accuracy±20mV
  Accuracy±25mV (Ta=–20 to +60°C)
- Overdischarge detection voltage.....2.0V to 3.0V, 50mV steps ..... Accuracy±35mV
- Discharging overcurrent detection voltage.....20mV to 65mV, 1mV steps ..... Accuracy±15%
  65mV to 300mV, 5mV steps ..... Accuracy±10mV
- Charging overcurrent detection voltage.....–65mV to –20mV, 1mV steps ..... Accuracy±15%
  –300mV to –65mV, 5mV steps..... Accuracy±10mV
- Short detection voltage.....0.4V, 0.5V, 0.6V..... Accuracy±150mV
  0.9V ..... Accuracy±300mV

(2) Release condition from each protection mode

- Overcharge release condition .....“VDD < Overcharge release voltage” and “Connecting load (V– > 0.4V)”
- Overdischarge release condition .....“VDD > Overdischarge release voltage” and “Connecting charger (V– < 0.2V)”
- Discharging overcurrent release condition .....“Removing load (V– <0.2V)”
- Charging overcurrent release condition.....“Connecting load (V– >0.4V)”

(3) Range of detection delay time

- Overcharge detection delay time.....Selection from 0.25s, 0.5s, 1.0s
- Overdischarge detection delay time .....Selection from 20ms, 24ms, 96ms, 125ms
- Discharging overcurrent detection delay time ...Selection from 8ms, 12ms, 16ms, 20ms, 48ms
- Charging overcurrent detection delay time.....Selection from 8ms, 12ms, 16ms, 20ms, 48ms
- Short detection delay time.....250μs standard

(4) 0V battery charge function .....Selection from “Permission” or “Prohibition”

(5) Low current consumption

- Normal mode .....Typ. 3.0μA, Max. 6.0μA
- Stand-by mode .....Max. 0.1μA (For “Charger connection release” the overdischarge release condition)
  Max. 0.6μA (For “Voltage release” the overdischarge release condition.)

(6) Absolute maximum ratings

- VDD pin.....VSS–0.3V to +12V
- COUT pin and V- pin.....VDD–28V to VDD+0.3V
- DOUT pin and CS pin .....VSS–0.3V to VDD+0.3V
- Storage temperature.....–55 to +125°C
- Operation temperature.....–40 to +85°C

Pin assignment

SSON-6J

(Top view)

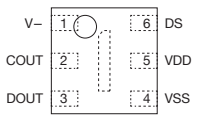

SON-6C

(Top view)

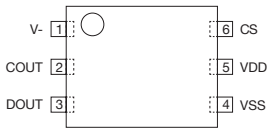

Pin no.	Symbol	Function
1	V-	Input terminal connected to charger negative voltage
2	COUT	Output of overcharge detection (Output type is CMOS)
3	DOUT	Output of overdischarge detection (Output type is CMOS)
4	VSS	VSS terminal (Connected to ground)
5	VDD	VDD terminal (Connected to IC substrait)
6	CS	Input of overcurrent detection

Selection guide

Product name	Package	Detection / Release voltage						0V battery charge function	Delay time combination *1	Current consumption at stand-by (MAX)[μA]
		Overcharge detection voltage [V]	Overcharge release voltage [V]	Overdischarge detection voltage[V]	Overdischarge release voltage [V]	Discharging overcurrent detection voltage [mV]	Charging overcurrent detection voltage [mV]			
		Vdet1	Vrel1	Vdet2	Vrel2	Vdet3	Vdet4			
MM3638A01RRE	SSON-6J	4.280	4.280	2.400	2.400	25.0	-20.0	Prohibition	1	0.1
MM3638A01YRE	SON-6C	4.280	4.280	2.400	2.400	25.0	-20.0	Prohibition	1	0.1
MM3638A02RRE	SSON-6J	4.405	4.405	2.400	2.400	32.0	-20.0	Prohibition	1	0.1
MM3638A02YRE	SON-6C	4.405	4.405	2.400	2.400	32.0	-20.0	Prohibition	1	0.1
MM3638A03RRE	SSON-6J	4.280	4.280	2.400	2.400	32.0	-30.0	Prohibition	1	0.1
MM3638B01RRE	SSON-6J	4.275	4.275	2.100	2.100	47.0	-25.0	Prohibition	1	0.1
MM3638B01YRE	SON-6C	4.275	4.275	2.100	2.100	47.0	-25.0	Prohibition	1	0.1
MM3638B02YRE	SON-6C	4.425	4.425	2.100	2.100	47.0	-25.0	Prohibition	1	0.1
MM3638D01YRE	SON-6C	4.225	4.025	2.500	2.500	75.0	-48.0	Prohibition	2	0.1
MM3638D02YRE	SON-6C	4.225	4.025	2.500	2.500	75.0	-48.0	Prohibition	2	0.1
MM3638D03YRE	SON-6C	4.225	4.025	2.500	2.500	75.0	-60.0	Prohibition	2	0.1
MM3638D04YRE	SON-6C	4.275	4.075	2.500	2.500	75.0	-48.0	Prohibition	2	0.1
MM3638D05YRE	SON-6C	4.225	4.025	2.500	2.500	50.0	-38.0	Prohibition	2	0.1
MM3638D06YRE	SON-6C	4.375	4.175	2.500	2.500	75.0	-60.0	Prohibition	2	0.1
MM3638D07YRE	SON-6C	4.325	4.125	2.500	2.500	75.0	-60.0	Prohibition	2	0.1
MM3638DA1YRE	SON-6C	4.400	4.200	2.500	2.900	75.0	-60.0	Prohibition	2	0.6
MM3638E01RRE	SSON-6J	4.280	4.280	2.400	2.400	80.0	-60.0	Prohibition	1	0.1
MM3638E02RRE	SSON-6J	4.280	4.280	2.400	2.400	90.0	-60.0	Prohibition	1	0.1
MM3638E04RRE	SSON-6J	4.405	4.405	2.400	2.400	80.0	-50.0	Prohibition	1	0.1
MM3638E09YRE	SON-6C	4.280	4.280	2.800	2.800	75.0	-60.0	Prohibition	1	0.1
MM3638E12RRE	SSON-6J	4.380	4.380	2.800	2.800	85.0	-50.0	Prohibition	1	0.1
MM3638E13RRE	SSON-6J	4.380	4.380	2.800	2.800	85.0	-50.0	Prohibition	4	0.1
MM3638E15RRE	SSON-6J	4.280	4.080	2.800	2.800	25.0	-20.0	Prohibition	1	0.1
MM3638F01YRE	SON-6C	4.425	4.425	2.500	2.500	30.0	-30.0	Prohibition	1	0.1
MM3638F03RRE	SSON-6J	4.275	4.275	2.350	2.350	47.0	-25.0	Prohibition	1	0.1
MM3638F04RRE	SSON-6J	4.280	4.280	2.400	2.400	32.0	-30.0	Prohibition	1	0.1
MM3638F07RRE	SSON-6J	4.405	4.405	2.400	2.400	32.0	-25.0	Prohibition	1	0.1
MM3638F09RRE	SSON-6J	4.230	4.230	2.800	2.800	80.0	-60.0	Prohibition	5	0.1
MM3638F11RRE	SSON-6J	4.430	4.330	2.400	2.400	32.0	-30.0	Prohibition	6	0.1
MM3638F12YRE	SON-6C	4.225	4.025	2.500	2.500	25.0	-23.0	Prohibition	7	0.1
MM3638F14RRE	SSON-6J	4.420	4.420	2.300	2.300	24.0	-20.0	Prohibition	1	0.1
MM3638F16RRE	SSON-6J	4.370	4.370	2.300	2.300	24.0	-20.0	Prohibition	1	0.1
MM3638F17RRE	SSON-6J	4.420	4.320	2.300	2.300	29.0	-27.0	Prohibition	1	0.1
MM3638F19YRE	SON-6C	4.425	4.425	2.400	2.400	30.0	-30.0	Prohibition	1	0.1
MM3638F20YRE	SON-6C	4.425	4.425	2.400	2.400	30.0	-30.0	Prohibition	3	0.1
MM3638F21YRE	SON-6C	4.425	4.425	2.400	2.400	37.0	-23.0	Prohibition	3	0.1
MM3638F22RRE	SSON-6J	4.425	4.425	2.800	2.800	30.0	-23.0	Prohibition	3	0.1
MM3638F22YRE	SON-6C	4.425	4.425	2.800	2.800	30.0	-23.0	Prohibition	3	0.1
MM3638F23RRE	SSON-6J	4.375	4.275	2.300	2.300	29.0	-27.0	Prohibition	1	0.1
MM3638FH1RRE	SSON-6J	4.470	4.470	2.465	2.465	40.0	-25.0	Prohibition	1	0.1
MM3638G05YRE	SON-6C	4.225	4.025	2.500	2.500	25.0	-23.0	Prohibition	2	0.1
MM3638H01YRE	SON-6C	4.280	4.180	2.300	2.500	32.0	-32.0	Permission	3	0.6

SSON-6J ... 3,000pcs/Reel
SON-6C ... 5,000pcs/Reel

*1: Delay time combination		1	2	3	4	5	6	7
Overcharge detection delay time	tVdet1	1.0s	1.0s	1.0s	1.0s	1.0s	1.0s	1.0s
Overdischarge detection delay time	tVdet2	125ms	96ms	125ms	125ms	20ms	20ms	20ms
Discharging overcurrent detection delay time	tVdet3	8ms	12ms	16ms	48ms	12ms	8ms	16ms
Charging overcurrent detection delay time	tVdet4	8ms	6ms	8ms	8ms	16ms	8ms	8ms
Short detection delay time	tshort	250μs	250μs	250μs	250μs	250μs	250μs	250μs

Please inquire to us, if you request a rank other than the above.

Typical application circuit

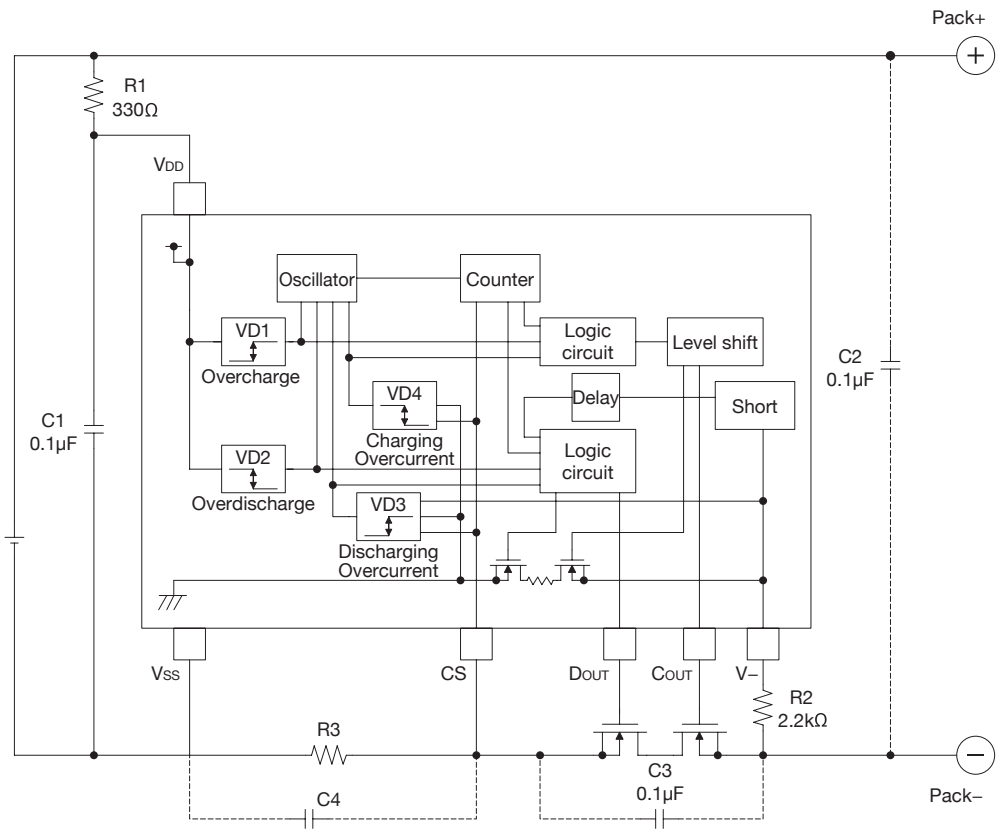

- R1 and C1 stabilize a supply voltage ripple. However, the detection voltage rises by the current of penetration in IC of the voltage detection when R1 is enlarged, and the value of R1 is adjusted to 1kohm or less. Moreover, adjust the value of C1 to 0.01μF or more to do the stability operation, please.

- R1 and R2 resistors are current limit resistance if a charger is connected reversibly or a high-voltage charger that exceeds the absolute maximum rating is connected. R1 and R2 may cause a power consumption will be over rating of power dissipation, therefore the "R1+R2" should be more than 1kohm. Moreover, if R2 is too enlarged, the charger connection release cannot be occasionally done after the overdischarge is detected, so adjust the value of R2 to 10kohm or less, please.

- R3 is resistor to sense the discharge or charging current. R3 is shown by the following expression by discharging current IODCP, discharging overcurrent detection voltage Vdet3, charging current IOCCP, and charging overcurrent detection voltage Vdet4.
  IODCP=Vdet3/R3 IOCCP=Vdet4/R3
  If R3 is too enlarged, the power loss increases. Moreover, the power might exceed a dissipation of resistance by the overcurrent, please select R3 according to the cell spec, after confirming the characteristic.

- C2, C3 and C4 capacitors have effect that the system stability about voltage ripple or imported noise. After check characteristics, decide that these capacitors should be inserted or not, where should be inserted, and capacitance value, please.
  Please arrange C4 near the terminal and use a few μF from tens of pF.

Symbol	Part	Min.	Typ.	Max.	Unit
R1	Resistor	100	330	1k	Ω
C1	Capacitor	0.01	0.1	1.0	μF
R2	Resistor	1k	2.2k	10k	Ω
R3	Sense resistor	-	10	-	mΩ

1 cell lithium–ion/lithium–polymer battery protection IC

MM3645 Series

Outline

MM3645 series are protection ICs for lithium–ion or lithium–polymer secondary battery using high voltage CMOS process. They protect the battery pack/system from overcharge, overdischarge, and overcurrent, etc. by controlling FET SW. They realize overcurrent detection with high accuracy and improved temperature dependence by using an external chip resistor. In addition, by using charging off mode, it reduces the off current of system and prevents lithium-ion battery from discharging when the system is off.

Features

(Unless otherwise specified, Ta=25°C)

(1) Range and accuracy of detection/release voltage

- Overcharge detection voltage.....4.0V to 4.5V, 5mV steps ..... Accuracy±20mV
  Accuracy±25mV (Topr=-20°C to +60°C)
- Overdischarge detection voltage.....2.0V to 3.0V, 50mV steps ..... Accuracy±35mV
- Discharging overcurrent detection voltage.....20mV to 300mV, 1mV steps ..... Accuracy±15%
- Charging overcurrent detection voltage.....-300mV to -20mV, 1mV steps ..... Accuracy±15%
- Short detection voltage.....0.45V to 0.9V, 50mV steps ..... Accuracy±100mV

(2) Release condition from each protection mode

- Overcharge release condition .....“VDD < Overcharge release voltage” and “Connecting load (V- > 0.4V)”
- Overdischarge release condition .....“VDD > Overdischarge release voltage” and “Connecting charger(V- < 0.2V)”
- Discharging overcurrent release condition .....“Removing load (V- < 0.2V)”
- Charging overcurrent release condition.....“Connecting load (V- > 0.4V)”

(3) Range of detection delay time

- Overcharge detection delay time.....Selection from 0.25s, 0.5s, 1.0s
- Overdischarge detection delay time .....Selection from 20ms, 24ms, 96ms, 125ms
- Discharging overcurrent detection delay time ...Selection from 8ms, 12ms, 16ms, 20ms, 48ms
- Charging overcurrent detection delay time.....Selection from 8ms, 12ms, 16ms, 20ms, 48ms
- Short detection delay time.....250μs standard

(4) 0V battery charge function .....Selection from “Permission” or “Prohibition”

(5) Forcible discharge OFF mode .....CNT>VDD-0.4: DOUT=L Discharge=OFF
CNT<VSS-0.4: DOUT=H Discharge=ON

(6) Low current consumption

- Normal mode .....Typ. 3.0μA, Max. 5.5μA
- Stand-by mode .....Max. 0.1μA

(7) Absolute maximum ratings

- VDD pin.....VSS-0.3V to +12V
- COUT pin and V- pin.....VDD-28V to VDD+0.3V
- DOUT pin and CS and CNTpin.....VSS-0.3V to VDD+0.3V
- Storage temperature.....-55°C to +125°C
- Operation temperature.....-40°C to +85°C

Pin assignment

TSOP-8A

(Top view)

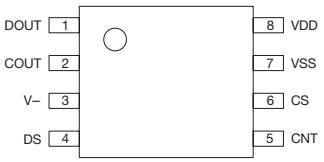

Pin no.	Symbol	Function
1	DOUT	Discharge FET control terminal
2	COUT	Charge FET control terminal
3	V-	Charger negative voltage input terminal
4	DS	Delay short terminal
5	CNT	Discharge FET mode control terminal
6	CS	Overcurrent detection input terminal
7	VSS	Positive power supply voltage input terminal
8	VDD	Negative power supply voltage input terminal

Selection guide

Product name	Package	Detection / Release voltage							0V battery charge function	Delay time combination *1	Current consumption at stand-by (MAX)[μA]
		Overcharge detection voltage [V]	Overcharge release voltage [V]	Overdischarge detection voltage[V]	Overdischarge release voltage [V]	Discharging overcurrent detection voltage [mV]	Charging overcurrent detection voltage [mV]	Shortdetection voltage [V]			
		Vdet1	Vrel1	Vdet2	Vrel2	Vdet3	Vdet4	Vshort			
MM3645A01VRE	TSOP-8A	4.430	4.330	2.300	2.300	37.0	-25.0	0.9	Permission	1	0.1
MM3645A02VRE	TSOP-8A	4.405	4.305	2.500	2.500	37.0	-37.0	0.9	Permission	1	0.1
MM3645B01VRE	TSOP-8A	4.430	4.330	2.400	2.400	43.0	-35.0	0.9	Prohibition	1	0.1
MM3645B02VRE	TSOP-8A	4.430	4.330	2.400	2.400	43.0	-35.0	0.6	Prohibition	1	0.1

TSOP-8A ... 3,000pcs/Reel

*1: Delay time combination		1
Overcharge detection delay time	tVdet1	1.0s
Overdischarge detection delay time	tVdet2	125ms
Discharging overcurrent detection delay time	tVdet3	16ms
Charging overcurrent detection delay time	tVdet4	8ms
Short detection delay time	tshort	250μs

Please inquire to us, if you request a rank other than the above.

Typical application circuit

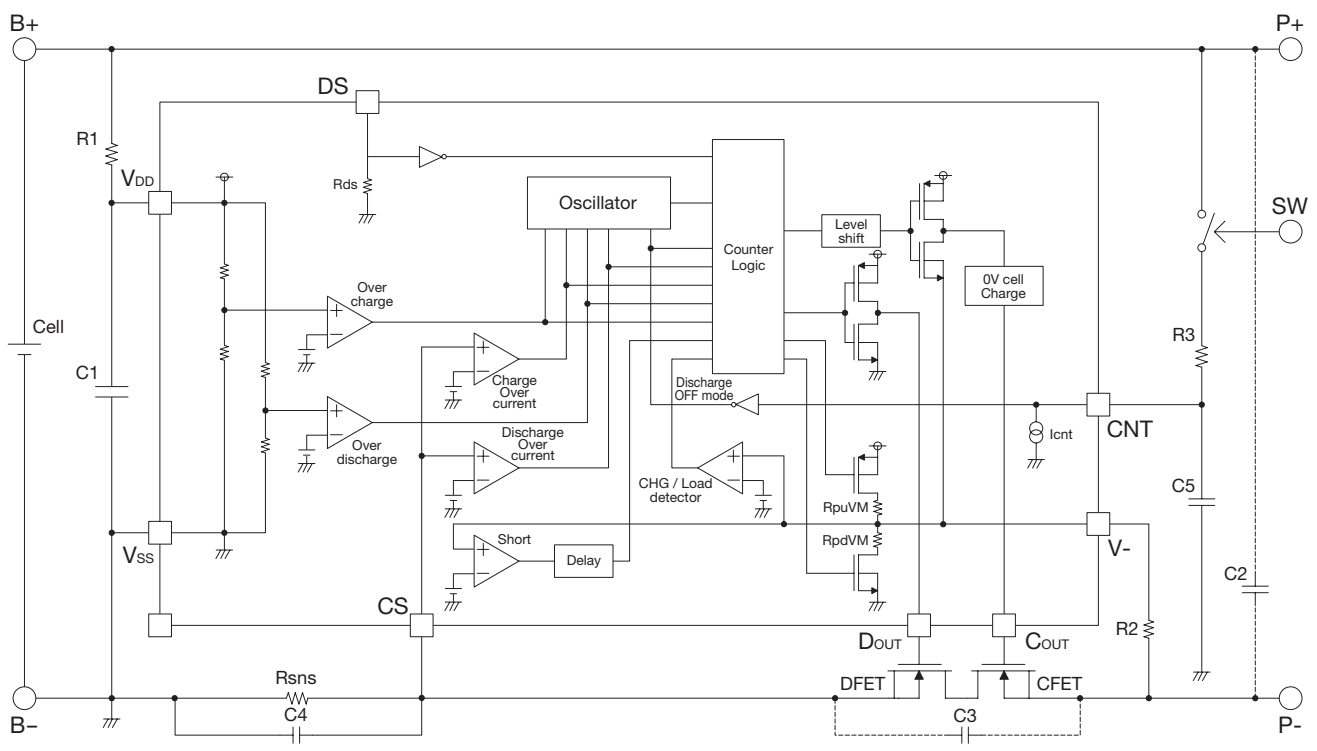

- R1 and C1 stabilize a supply voltage fluctuation. However, the detection voltage rises by the current consumption of IC when R1 is too large, and the value of R1 is adjusted to 1kohm or less. Moreover, adjust the value of C1 to 0.01μF or more to do the stability operation, please.

- R1 and R2 resistors are current limit resistance if a charger is connected reversibly or a high-voltage charger that exceeds the absolute maximum rating is connected. R1 and R2 may cause a power consumption will be over rating of power dissipation, therefore the “R1+R2” should be more than 1kohm. Moreover, if R2 is too enlarged, the charger connection release cannot be occasionally done after the overdischarge is detected, so adjust the value of R2 to 10kohm or less, please.

- Rsns is sense resistance for detect charge current and discharge current. If R3 is too enlarged, the power loss increases. Moreover, the power might exceed a dissipation of resistance by the overcurrent, please select R3 according to the battery spec, after confirming the characteristic.

- Current threshold of discharging overcurrent detection and short detection (Idoc, Ishort) are expressed in the following equations.

  Idoc = Vdet3 / Rsns

  Ishort = Vshort / (Rsns + 2Ron)

  * Ron: ON resistance of CFET and DFET

- Current threshold of charging overcurrent detection (Icoc) is expressed in the following equation.

  Icoc = Vdet4 / Rsns

- C4 has removed the exogenous noise to CS terminal. Similarly R3 and C5 have removed the exogenous noise to a CNT terminal. Please select required value in consideration of the system characteristic, and arrange near the each terminal.

Typical application circuit

- C2 and C3 have effect that the system stability about voltage ripple and exogenous noise. Please decide that these capacitors should be inserted or not, where should be inserted, and capacitance value in consideration of the system characteristic.

- In the over discharge mode V- terminal pulled up to VDD by RpuVM. If charger is connected, Iv- flow to Pterminal from P+ and the voltage drop (⊿V) arises in R1. Therefore the cell voltage (Vcell) at overdischarge release is expressed in the following equation.

  Vcell = Vrel2 + ⊿V
  = Vrel2 + R1 * Iv-
  = Vrel2 + R1 * Vchg / (R1 + RpuVM + R2)
  * Vchg: Charger voltage

Symbol	Part	Min.	Typ.	Max.	Unit
R1	Resistor	-	330	1k	Ω
C1	Capacitor	0.01	0.1	1.0	μF
R2	Resistor	-	2.2k	10k	Ω
Rsns	Sense resistor	-	-	-	mΩ
C2	Capacitor	-	0.1	-	μF
R3	Resistor	1k	-	100k	Ω
C3	Capacitor	-	0.01	-	μF
C4 / C5	Capacitor	-	0.1	-	μF
DFET / CFET	Nch MOS FET	-	-	-	-

1 cell lithium–ion/lithium–polymer battery protection IC

MM3721 Series

Outline

MM3721 series are lithiumz–ion / lithium–polymer battery protection IC and detect charge current / discharge current with high precision by current sensing resistor (Rsns).

MM3721 have two step discharge overcurrent detection. And system is protected appropriately in the next 2 state, Normal discharge mode and large current discharge mode.

Features

(Unless otherwise specified, Ta=25°C)

(1) Range and accuracy of detection/release voltage

- Overcharge detection voltage.....3.6V to 4.5V, 5mV steps ..... Accuracy±20mV (Topr=-5°C to +55°C)
- Overcharge release voltage .....Vdet1–0.2V to Vdet1, 5mV steps..... Accuracy±30mV
- Overdischarge detection voltage .....2.0V to 3.0V, 50mV steps ..... Accuracy±35mV
- Overdischarge release voltage.....2.0V to 3.0V, 50mV steps ..... Accuracy+65/ -35mV (In case Vdet2=Vrel2)
  Accuracy+90/ -65mV (In case Vdet2≠Vrel2)
- Discharging overcurrent detection voltage1 .....20mV to 150mV, 1mV steps ..... Accuracy±ΔV *1
- Discharging overcurrent detection voltage2 .....Vdet3-1 + 10mV to 200mV..... Accuracy±ΔV *1
- Charging overcurrent detection voltage.....20mV to 50mV, 1mV steps ..... Accuracy±ΔV *1
- Short detection voltage.....0.4V to 0.9V, 0.05V steps ..... Accuracy±100mV
- 0V battery charge inhibition battery voltage .....1.3V to 1.8V, 0.1V steps ..... Accuracy±100mV
  0.9V ..... Accuracy±300mV

*1 Current detection voltage accuracy

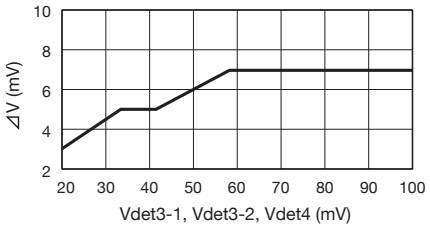

(2) Delay time setting

- Overcharge detection delay time ..... 256msec to 4.6sec
- Overdischarge detection delay time ..... 8msec to 256msec
- Discharging overcurrent 1 detection delay time ..... 8msec to 256msec
- Discharging overcurrent 2 detection delay time ..... 6msec to 64msec
  tVdet3-2 < tVdet3-1
- Charging overcurrent detection delay time..... 256sec to 400sec

(3) Current consumption

- Normal mode .....Typ. 3.0A, Max. 6.0A
- Stand-by mode .....Max. 0.1A (In case Overdischarge latch function Enable)
  Max 0.6A (In case Overdischarge latch function Disable)

(4) 0V battery Charge function.....Selectable “Permission” or “Prohibition”

(5) Absolute maximum ratings

- VDD pin.....VSS–0.3V to +12V
- COUT pin and V- pin .....VDD–28V to VDD+0.3V
- DOUT pin and CS pin .....VSS–0.3V to VDD+0.3V
- Storage temperature .....–55°C to +125°C
- Operation temperature.....–40°C to +85°C

Pin assignment

SSON-6J

(Top view)

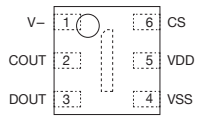

SON-6C

(Top view)

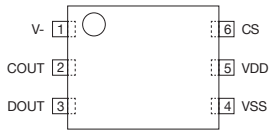

Pin no.	Symbol	Function
1	V-	Charger negative voltage input terminal
2	COUT	Charge FET control terminal
3	DOUT	Discharge FET control terminal
4	VSS	Negative power supply voltage input terminal
5	VDD	Positive power supply voltage input terminal
6	CS	Current detection terminal

LINE UP

MODEL	Package	0V charge	Protection mode latch function			Hys-Cancel		Discharging overcurrent release range extended function.	Overcharge detection voltage	Overcharge release voltage	Overdischarge detection voltage	Overdischarge release voltage	Discharging overcurrent detection voltage 1	Discharging overcurrent detection voltage 2	Charging overcurrent detection voltage	Short detection voltage	Delay time *1
			Overcharge	Overdischarge	Discharge overcurrent	Overcharge	Overdischarge		Vdet1	Vrel1	Vdet2	Vrel2	Vdet3-1	Vdet3-2	Vdet4	Vshort	
									V	V	V	V	V	V	V	V	
MM3721CK1RRE	SSON-6J	0.9	Disable	Enable	Enable	Enable	-	Yes(1.0V)	4.425	4.325	2.300	2.300	0.029	0.043	-0.027	0.400	G
MM3721CK2RRE	SSON-6J	0.9	Disable	Enable	Enable	Enable	-	Yes(1.0V)	4.335	4.225	2.300	2.300	0.029	0.043	-0.027	0.400	G
MM3721EF1RRE	SSON-6J	0.9	Enable	Enable	Disable	-	-	Yes(1.0V)	4.425	4.425	2.400	2.400	0.040	0.072	-0.022	0.600	A
MM3721EF2RRE	SSON-6J	0.9	Enable	Enable	Disable	-	-	Yes(1.0V)	4.420	4.420	2.300	2.300	0.030	0.040	-0.020	0.400	B
MM3721EF5RRE	SSON-6J	0.9	Enable	Enable	Disable	-	-	Yes(1.0V)	4.420	4.420	2.300	2.300	0.032	0.047	-0.028	0.400	F
MM3721EF6RRE	SSON-6J	0.9	Enable	Enable	Disable	-	-	Yes(1.0V)	4.470	4.470	2.300	2.300	0.037	0.054	-0.021	0.400	B
MM3721EF7RRE	SSON-6J	0.9	Enable	Enable	Disable	-	-	Yes(1.0V)	4.430	4.430	2.300	2.300	0.034	0.050	-0.020	0.400	B
MM3721EF8RRE	SSON-6J	0.9	Enable	Enable	Disable	-	-	Yes(1.0V)	4.275	4.275	2.300	2.300	0.030	0.040	-0.020	0.400	B
MM3721EFBRRE	SSON-6J	0.9	Enable	Enable	Disable	-	-	Yes(1.0V)	4.470	4.470	2.300	2.300	0.032	0.047	-0.028	0.400	F
MM3721EFDRRE	SSON-6J	0.9	Enable	Enable	Disable	-	-	Yes(1.0V)	4.275	4.275	2.300	2.300	0.030	0.040	-0.020	0.400	L
MM3721EFERRE	SSON-6J	0.9	Enable	Enable	Disable	-	-	Yes(1.0V)	4.400	4.400	2.300	2.300	0.030	0.040	-0.020	0.400	L
MM3721EL2RRE	SSON-6J	Permission	Enable	Enable	Disable	-	-	Yes(1.0V)	4.475	4.475	2.600	2.600	0.030	0.045	-0.025	0.250	K
MM3721FF1RRE	SSON-6J	1.6	Disable	Disable	Disable	Disable	Enable	Yes(1.0V)	4.440	4.240	2.300	2.600	0.040	0.063	-0.020	0.800	C
MM3721FF2YRE	SON-6C	1.6	Disable	Disable	Disable	Disable	Enable	Yes(1.0V)	4.440	4.240	2.300	2.600	0.064	0.095	-0.022	0.800	D
MM3721HF1RRE	SSON-6J	0.9	Disable	Enable	Disable	Disable	-	Yes(1.0V)	4.440	4.240	2.300	2.300	0.025	0.038	-0.020	0.400	E
MM3721HF2RRE	SSON-6J	0.9	Disable	Enable	Disable	Disable	-	Yes(1.0V)	4.440	4.240	2.300	2.300	0.025	0.034	-0.020	0.400	E
MM3721HF4RRE	SSON-6J	0.9	Disable	Enable	Disable	Disable	-	Yes(1.0V)	4.485	4.285	2.300	2.300	0.025	0.034	-0.020	0.400	E
MM3721HF7RRE	SSON-6J	0.9	Disable	Enable	Disable	Disable	-	Yes(1.0V)	4.470	4.250	2.400	2.400	0.024	0.035	-0.020	0.400	I
MM3721HF8RRE	SSON-6J	0.9	Disable	Enable	Disable	Disable	-	Yes(1.0V)	4.520	4.310	2.300	2.300	0.024	0.035	-0.020	0.300	J
MM3721HL1RRE	SSON-6J	Permission	Disable	Enable	Disable	Disable	-	Yes(1.0V)	4.475	4.275	2.500	2.500	0.025	0.034	-0.025	0.400	H
MM3721JF1YRE	SON-6C	0.9	Enable	Disable	Disable	-	Enable	Yes(1.0V)	4.275	4.275	2.300	2.600	0.028	0.042	-0.024	0.400	B

*1 Delay time

	tVdet1	tVrel1	tVdet2	tVrel2	tVdet3-1	tVrel3-1	tVdet3-2	tVrel3-2	tVdet4	tVrel4	tshort
	s	ms	ms	ms	ms	ms	ms	ms	ms	ms	μs
A	1.02	16.00	125.00	1.00	3072.00	1.00	10.00	1.00	8.00	1.00	300
B	1.02	16.00	125.00	1.00	5120.00	1.00	8.00	1.00	8.00	1.00	300
C	4.60	16.00	96.00	1.00	160.00	1.00	16.00	1.00	8.00	1.00	300
D	4.60	16.00	96.00	1.00	160.00	1.00	16.00	1.00	8.00	1.00	400
E	4.60	16.00	96.00	1.00	448.00	1.00	24.00	1.00	8.00	1.00	300
F	1.02	16.00	125.00	1.00	2304.00	1.00	8.00	1.00	8.00	1.00	300
G	1.02	16.00	125.00	1.00	80.00	1.00	8.00	1.00	8.00	1.00	250
H	1.02	16.00	96.00	1.00	448.00	1.00	24.00	1.00	8.00	1.00	427
I	1.02	16.00	96.00	1.00	160.00	2.00	8.00	2.00	8.00	1.00	400
J	1.02	16.00	96.00	1.00	256.00	2.00	16.00	2.00	16.00	1.00	400
K	1.02	16.00	125.00	1.00	5120.00	1.00	16.00	1.00	8.00	1.00	250
L	1.02	16.00	125.00	1.00	5120.00	1.00	32.00	1.00	8.00	1.00	300

Please inquire to us, if you need another spec.

Typical application circuit

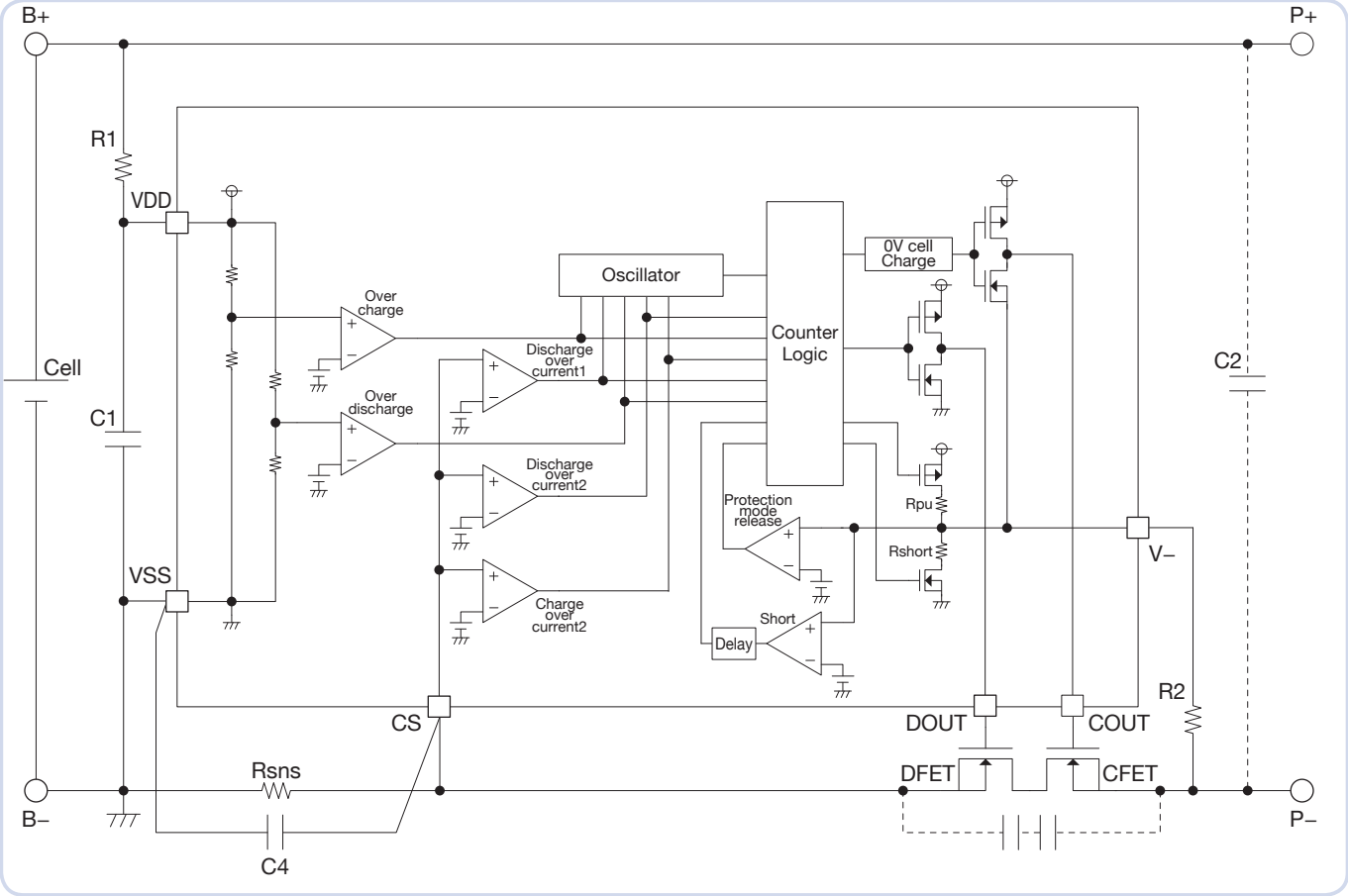

Symbol	Part	Min.	Typ.	Max.	Purpose
R1	Resistor	-	100	1.0KΩ	For voltage fluctuation, For ESD
C1	Capacitor	0.01μF	0.1μF	1.0μF	For voltage fluctuation
R2	Resistor	-	1.0KΩ	10KΩ	Current limit for charger reverse connection
C2	Capacitor	-	0.1μF	-	For exogenous noise
C3	Capacitor	-	0.1μF	-	For exogenous noise
Rsns	Resistor	-	-	20mΩ	Current detection resistance
C4	Capacitor	-	0.1μF	-	For exogenous noise
DFET CFET	Nch MOS FET	-	-	-	Charge and discharge control

This typical application circuit and constant value do not guarantee proper operation. Please evaluate thoroughly by actual application to set up constants.

1 cells lithium–ion/lithium–polymer battery protection IC

MM3722 Series

Outline

MM3722 series are li–ion battery protection IC and detect charge current / discharge current with high precision by current sensing resistor (Rsns). In the One–cell battery pack, on resistance of the FET SW has been used for over-current/short-current detection.

MM3722 realize over–current/short-current protection with high accuracy and with no temperature dependence by using a chip resistor.

Features

(Unless otherwise specified, Ta=25°C)

(1) Range and accuracy of detection/release voltage

- Overcharge detection voltage.....3.8V to 4.5V, 5mV steps ..... Accuracy±20mV (Topr=–5°C to +55°C)
- Overcharge release voltage .....Vdet1-0.2V to Vdet1, 5mV steps..... Accuracy±30mV
- Overdischarge detection voltage.....2.0V to 3.0V, 50mV steps ..... Accuracy±35mV
- Overdischarge release voltage.....2.0V to 3.0V, 50mV steps ..... Accuracy+65/ –35mV (In case Vdet2=Vrel2)
  Accuracy+90/ –65mV(In case Vdet2≠Vrel2)
- Discharging overcurrent detection voltage .....20mV to 150mV, 1mV steps ..... Accuracy±ΔV *1
- Charging overcurrent detection voltage.....-150mV to -20mV, 1mV steps ..... Accuracy±ΔV *1
- Short detection voltage.....40mV to 250mV, 1mV steps ..... Accuracy±20%
- 0V battery charge inhibition battery voltage .....1.3V to 1.8V, 0.1V steps ..... Accuracy±100mV
  0.9V ..... Accuracy±300mV

*1 Current detection voltage accuracy

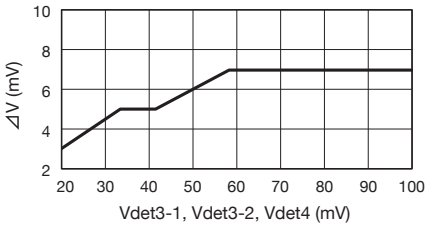

(2) Delay time setting

- Overcharge detection delay time.....256msec to 4.6sec
- Overdischarge detection delay time .....8msec to 256msec
- Discharging overcurrent detection delay time ...8msec to 256msec
- Charging overcurrent detection delay time.....6msec to 64msec
- Short detection delay time.....250μsec to 400μsec

(3) Current consumption

- Normal mode .....Typ. 3.0μA, Max. 6.0μA
- Stand-by mode .....Max. 0.1μA (In case Overdischarge latch function Enable)
  Max. 0.6μA (In case Overdischarge latch function Disable)

(4) 0V battery Charge function.....Selectable “Permission” or “Prohibition”

(5) Absolute maximum ratings

- VDD pin.....VSS–0.3V to +12V
- COUT pin and V- pin .....VDD–28V to VDD+0.3V
- DOUT pin and CS pin .....VSS–0.3V to VDD+0.3V
- Storage temperature .....–55°C to +125°C
- Operation temperature.....–40°C to +85°C

Pin assignment

■ SSON-6J/SSON-6M ■ SON-6C

(Top view)

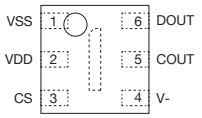

(Top view)

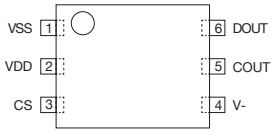

Pin no.	Symbol	Function
1	VSS	Negative power supply voltage input terminal
2	VDD	Positive power supply voltage input terminal
3	CS	Current detection terminal
4	V-	Charger negative voltage input terminal
5	COUT	Charge FET control terminal
6	DOUT	Discharge FET control terminal

LINE UP

MODEL	Package	0V charge	Protection mode latch function			Hys-Cancel		Discharging overcurrent release range extended function.	Overcharge detection voltage	Overcharge detection voltage	Overdischarge detection voltage	Overdischarge release voltage	Discharging overcurrent detection voltage	Charging overcurrent detection voltage	Short detection voltage	Delay time *1
			Overcharge	Overdischarge	Discharge overcurrent	Overcharge	Overdischarge		Vdet1	Vrel1	Vdet2	Vrel2	Vdet3	Vdet4	Vshort	
									V	V	V	V	V	V	V	
MM3722AC1YRE	SON-6C	0.9	Disable	Disable	Disable	Enable	Enable	Yes(VDD−0.9V)	4.425	4.225	2.500	2.900	0.032	-0.020	0.060	B
MM3722AJ1YRE	SON-6C	Permission	Disable	Disable	Disable	Enable	Enable	Yes(VDD−0.9V)	4.425	4.225	2.500	2.900	0.036	-0.020	0.060	B
MM3722AJ4RRE	SSON-6J	Permission	Disable	Disable	Disable	Enable	Enable	Yes(VDD−0.9V)	4.470	4.270	2.500	2.900	0.049	-0.031	0.160	C
MM3722AJ4YRE	SON-6C	Permission	Disable	Disable	Disable	Enable	Enable	Yes(VDD−0.9V)	4.470	4.270	2.500	2.900	0.049	-0.031	0.160	C
MM3722AM1RRE	SSON-6J	0.9	Disable	Disable	Disable	Enable	Enable	Yes(VDD−0.9V)	4.475	4.275	2.500	2.900	0.032	-0.020	0.060	B
MM3722CM1RRE	SSON-6JorM	0.9	Disable	Enable	Disable	Enable	Disable	Yes(VDD−0.9V)	4.275	4.075	2.400	2.400	0.034	-0.022	0.180	D
MM3722CM2RRE	SSON-6JorM	0.9	Disable	Enable	Disable	Enable	Disable	Yes(VDD−0.9V)	4.380	4.180	2.400	2.400	0.034	-0.022	0.180	D
MM3722KF1RRE	SSON-6J	0.9	Enable	Enable	Disable	-	-	Yes(1.0V)	4.280	4.280	2.400	2.400	0.032	-0.030	0.180	A
MM3722KF2RRE	SSON-6J	0.9	Enable	Enable	Disable	-	-	Yes(1.0V)	4.425	4.425	2.400	2.400	0.034	-0.022	0.180	A
MM3722KF3RRE	SSON-6J	0.9	Enable	Enable	Disable	-	-	Yes(1.0V)	4.425	4.425	2.800	2.800	0.040	-0.030	0.180	A
MM3722KF4RRE	SSON-6J	1.5	Enable	Enable	Disable	-	-	Yes(1.0V)	4.425	4.425	2.600	2.600	0.040	-0.030	0.180	A
MM3722KF6RRE	SSON-6J	0.9	Enable	Enable	Disable	-	-	Yes(1.0V)	4.475	4.475	2.400	2.400	0.040	-0.025	0.180	A
MM3722KF7RRE	SSON-6J	0.9	Enable	Enable	Disable	-	-	Yes(1.0V)	4.475	4.475	2.400	2.400	0.020	-0.030	0.180	A
MM3722KF8RRE	SSON-6J	0.9	Enable	Enable	Disable	-	-	Yes(1.0V)	4.475	4.475	2.400	2.400	0.034	-0.022	0.180	A
MM3722KF9RRE	SSON-6J	0.9	Enable	Enable	Disable	-	-	Yes(1.0V)	4.525	4.525	2.300	2.300	0.020	-0.030	0.180	A
MM3722KFARRE	SSON-6J	0.9	Enable	Enable	Disable	-	-	Yes(1.0V)	4.425	4.425	2.800	2.800	0.034	-0.022	0.180	A
MM3722KFCRRE	SSON-6J	0.9	Enable	Enable	Disable	-	-	Yes(1.0V)	4.475	4.475	2.800	2.800	0.040	-0.025	0.180	A

*1 Delay time

	tVdet1	tVrel1	tVdet2	tVrel2	tVdet3	tVrel3	tVdet4	tVrel4	tshort
	s	ms	ms	ms	ms	ms	ms	ms	μs
A	1.000	16.00	20.00	1.00	12.00	1.00	16.00	1.00	250
B	1.024	16.00	96.00	1.00	12.00	1.00	10.00	1.00	300
C	1.024	16.00	125.00	1.00	16.00	1.00	8.00	1.00	250
D	1.024	16.00	20.00	1.00	32.00	4.00	16.00	1.00	250

Please inquire to us, if you need another spec.

Typical application circuit

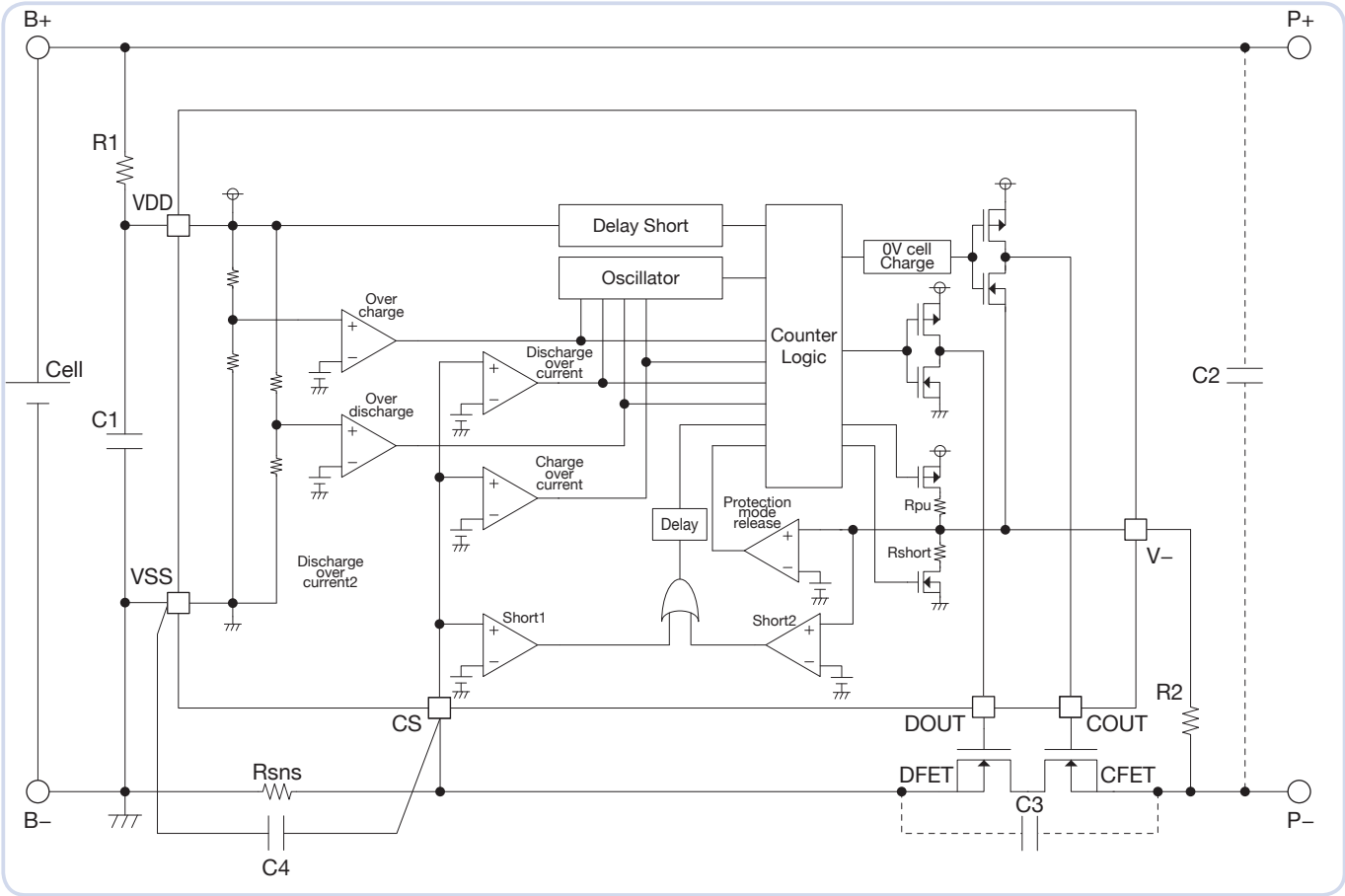

Symbol	Part	Min.	Typ.	Max.	Purpose
R1	Resistor	-	100Ω	1.0KΩ	For voltage fluctuation, For ESD
C1	Capacitor	0.01μF	0.1μF	1.0μF	For voltage fluctuation
R2	Resistor	-	1.0KΩ	10KΩ	Current limit for charger reverse connection
C2	Capacitor	-	0.1μF	-	For exogenous noise
C3	Capacitor	-	0.1μF	-	For exogenous noise
Rsns	Resistor	-	-	20mΩ	Current detection resistance
C4	Capacitor	-	0.1μF	-	For exogenous noise
DFET CFET	Nch MOS FET	-	-	-	Charge and discharge control

This typical application circuit and constant value do not guarantee proper operation. Please evaluate thoroughly by actual application to set up constants.

MM3723 Series

High-accuracy overcharge detection

Outline

The MM3723 series integrates into 1.09mm × 0.81mm × 0.46mm WLCSP Package. It's using high voltage CMOS process for overcharge, overdischarge and overcurrent protection of the rechargeable Lithium-ion and Lithium-polymer battery. The overcharge, overdischarge, discharging overcurrent, charging overcurrent and short protection of the rechargeable one-cell Lithium-ion and Lithium-polymer battery can be detected.

Features

(Unless otherwise specified, Ta=25°C)

(1) Range and accuracy of detection/release voltage

- Overcharge detection voltage..... Vdet1 ..... 3.6V to 4.6V, 5mV steps..... Accuracy±12mV
  Accuracy±20m(Ta=-20 to +60°C)
- Overdischarge detection voltage ..... Vdet2 ..... 2.0V to 3.0V, 50mV steps..... Accuracy±35mV
- Discharging overcurrent detection voltage ..... Vdet3 ..... 20mV to +100mV, 1mV steps..... Accuracy±ΔV *1
- Charging overcurrent detection voltage ..... Vdet4 ..... -100mV to -20mV, 1mV steps ..... Accuracy±ΔV *1
- Short detection voltage1..... Vshort ..... 100mV to 300mV,10mV steps .....Accuracy±8%

*1 Accuracy of overcurrent detection voltage (Ta=25°C)

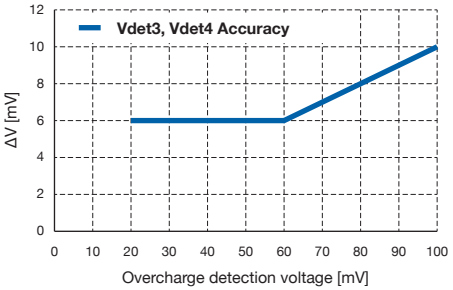

(2) Range of detection delay time

- Overcharge detection delay time.....Selection from 1.0s, 1.2s, 4.0s
- Overdischarge detection delay time .....Selection from 20ms, 24ms, 32ms, 96ms, 128ms
- Discharging overcurrent detection delay time ...Selection from 8ms, 12ms, 16ms, 20ms, 256ms, 512ms
- Charging overcurrent detection delay time.....Selection from 4ms, 6ms, 8ms, 10ms, 12ms, 16ms, 96ms
- Short detection delay time.....Selection from 250µßs to 400µs

(3) 0V battery charge function .....Selection from “Permission” or “Prohibition”

(4) Low current consumption (Not include NTC bias current)

- Normal mode .....Typ. 2.5µA, Max. 4.0µA
- Stand-by mode .....Max. 0.1µA (Overdischarge latch function Enable)
  Max. 0.6µA (Overdischarge latch function Disable)

Pin assignment

WLCSP-6B

(Top view)

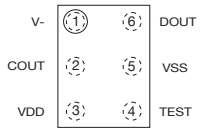

Pin no.	Symbol	Function
A1	V-	Negative power supply voltage input terminal
A2	COUT	Charge FET control terminal
B1	VDD	Positive power supply voltage input terminal
B2	TEST	Test mode control terminal
C1	VSS	Negative power supply voltage input terminal
C2	DOUT	Discharge FET control terminal

Detection / Release voltage

LINE UP

Product name	Package	0V battery charge function	Detection / Release voltage							*1 Delay time	Protedtion mode latch function		
			Overcharge detection voltage	Overcharge release voltage	Overdischarge detection voltage	Overdischarge release voltage	Discharging overcurrent detection voltage	Charging overcurrent detection voltage	Short detection voltage		Overcharge	Overdischarge	Discharge overcurrent
			Vdet1	Vrel1	Vdet2	Vrel2	Vdet3	Vdet4	Vshort				
			V	V	V	V	V	V	V				
MM3723CL3LRE	WLCSP-6B	Permission	4.425	4.225	2.300	2.300	0.060	-0.020	0.150	A	Disable	Enable	Disable
MM3723CL4LRE	WLCSP-6B	Permission	4.475	4.275	2.200	2.200	0.070	-0.030	0.200	B	Disable	Enable	Disable

*1 Delay time

Function	tVdet1	tVdet2	tVdet3	tVdet4	tshort1
	ms	ms	ms	ms	μs
A	1.0	96	12	10	300
B	1.0	96	24	20	650

Please inquire to us, if you request a rank other than the above.

1 cell lithium–ion/lithium–polymer battery protection IC

MM3724 Series

Outline

The **MM3724** series are protection IC using high voltage CMOS process for overcharge, overdischarge and overcurrent protection of the rechargeable lithium–ion or lithium–polymer battery.
The overcharge, overdischarge, discharging overcurrent, charging overcurrent, and short protection of the rechargeable one-cell Lithium-ion or Lithium-polymer battery can be detected.
Each of these IC composed of four voltage detectors, short detection circuit, reference voltage sources, oscillator, counter circuit and logical circuits.

Features

(Unless otherwise specified, Ta=25°C)

(1) Range and accuracy of detection/release voltage

- Overcharge detection voltage.....3.8V to 4.5V, 5mV steps ..... Accuracy±20mV (Topr=-5°C to +55°C)
- Overcharge release voltage .....Vdet1-0.2V to Vdet1, 5mV steps..... Accuracy±30mV
- Overdischarge detection voltage.....2.0V to 3.0V, 50mV steps ..... Accuracy±35mV
- Overdischarge release voltage.....2.0V to 3.0V, 50mV steps ..... Accuracy+65/ –35mV(In case Vdet2=Vrel2)
  Accuracy+90/ –65mV(In case Vdet2≠Vrel2)
- Discharging overcurrent detection voltage.....20mV to 300mV, 1mV steps ..... Accuracy±ΔV *1
- Charging overcurrent detection voltage.....-300mV to -20mV, 1mV steps ..... Accuracy±ΔV *1
- Short detection voltage.....0.4V to 0.9V, 0.05V steps ..... Accuracy±100mV
- 0V battery charge inhibition battery voltage .....1.3V to 1.8V, 0.1V steps ..... Accuracy±100mV
  0.9V ..... Accuracy±300mV

*1 Current detection voltage accuracy

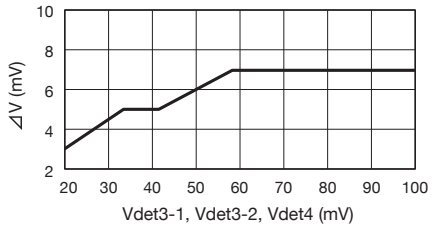

(2) Delay time setting

- Overcharge detection delay time.....256msec to 4.6sec
- Overdischarge detection delay time .....8msec to 256msec
- Discharging overcurrent detection delay time ...8msec to 256msec
- Charging overcurrent detection delay time.....6msec to 64msec
- Short detection delay time.....250μsec to 400μsec

(3) Current consumption

- Normal mode .....Typ. 3.0μA, Max. 6.0μA
- Stand-by mode .....Max. 0.1μA (In case Overdischarge latch function Enable)
  Max 0.6μA (In case Overdischarge latch function Disable)

4) 0V battery Charge function.....Selectable “Permission” or “Prohibition”

5) Absolute maximum ratings

- VDD pin.....VSS–0.3V to +12V
- COUT pin and V- pin .....VDD–28V to VDD+0.3V
- DOUT pin and CS pin .....VSS–0.3V to VDD+0.3V
- Storage temperature .....–55°C to +125°C
- Operation temperature.....–40°C to +85°C

Pin assignment

SSON-6J

(Top view)

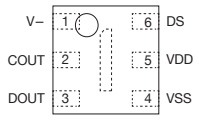

SON-6C

(Top view)

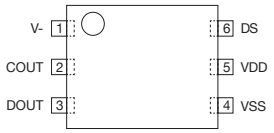

Pin no.	Symbol	Function
1	V-	Charger negative voltage input terminal
2	COUT	Charge FET control terminal
3	DOUT	Discharge FET control terminal
4	VSS	Negative power supply voltage input terminal
5	VDD	Positive power supply voltage input terminal
6	CS	Current detection terminal

LINE UP

Peoduct Name	Package	0V charge	Protection mode latch function			Hys–cancel		Discharging overcurrent release range extended function	Overcharge detection voltage	Overdischarge release voltage	Overdischarge detection voltage	Overdischarge release voltage	Discharging overcurrent detection voltage	Charging overcurrent detection voltage	Short detection voltage	Delay time *2
			Overcharge	Overdischarge	Dischage overcuurent	Overcharge	Overdischarge		Vdet1	Vrel1	Vdet2	Vrel2	Vdet3–1	Vdet4	Vshort	
									V	V	V	V	V	V	V	
MM3724AC1RRE	SSON-6J	0.9	Disable	Disable	Disable	Enable	Enable	Yes (VDD-0.9V)	4.425	4.225	2.500	2.900	0.032	-0.020	0.150	A
MM3724CF3RRE	SSON-6J	0.9	Disable	Enable	Disable	Enable	-	Yes(VDD-0.9V)	4.280	4.080	2.300	2.300	0.064	-0.020	0.150	A
MM3724VK1RRE	SSON-6J	2.4	Disable	Enable	Disable	Enable	-	Disable	4.415	4.240	2.800	2.800	0.050	-	0.900	B

*Delay time 2

	tVdet1	tVrel1	tVdet2	tVrel2	tVdet3	tVrel3	tVdet4	tVrel4	tshort
	sec	msec	msec	msec	msec	msec	msec	msec	μsec
A	1.024	16.00	96.00	1.00	12.00	1.00	10.00	1.00	300
B	1.024	8.00	24.00	4.00	12.00	4.00	-	-	400

*Please inquire to us, if you need another spec.

Typical application circuit

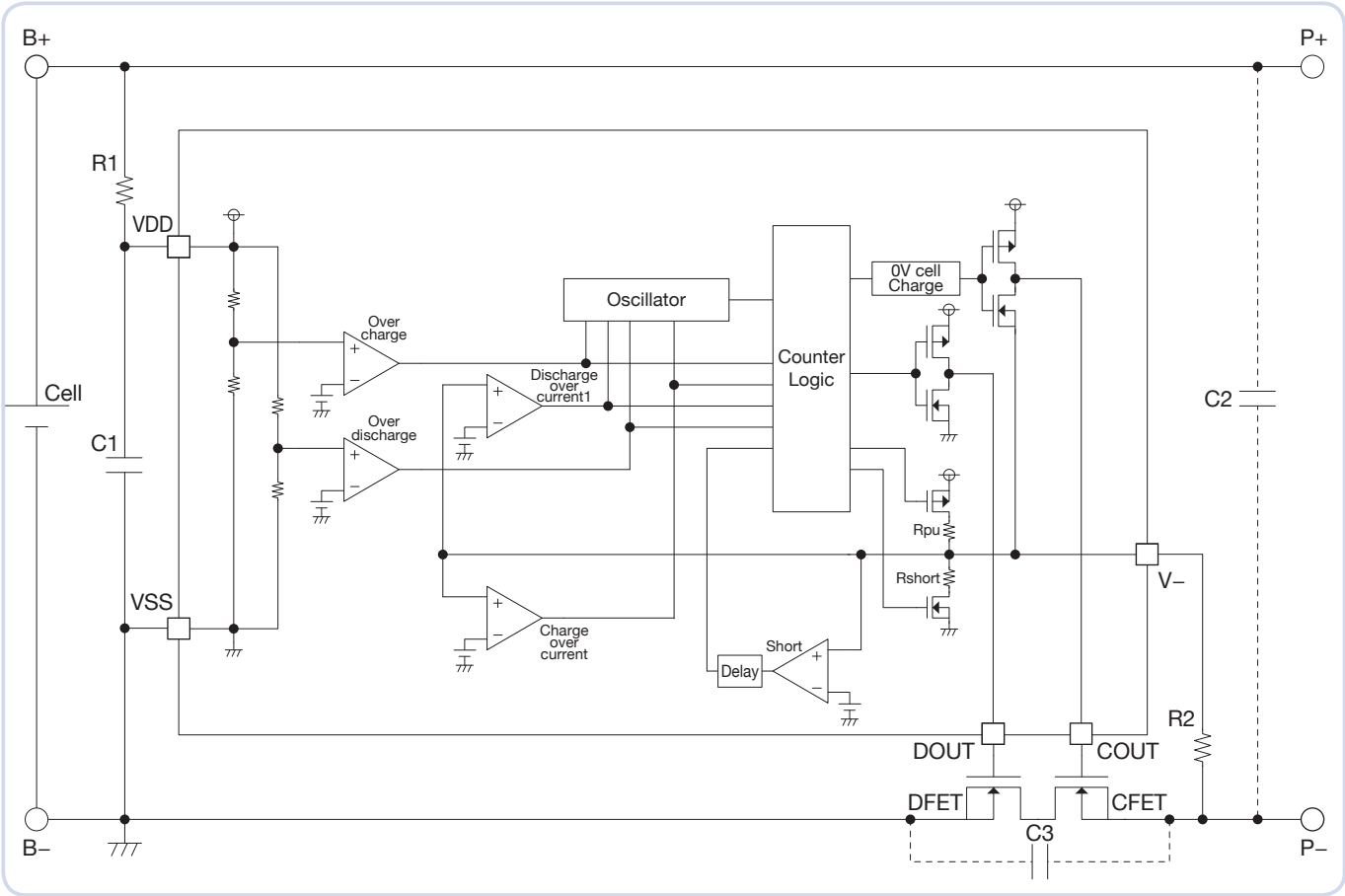

Symbol	Part	Min.	Typ.	Max.	Purpose
R1	Resistor	100Ω	330Ω	1.0KΩ	For voltage fluctuation, For ESD
C1	Capacitor	0.01μF	0.1μF	1.0μF	For voltage fluctuation
R2	Resistor	1.0KΩ	2.2KΩ	10KΩ	Current limit for charger reverse connection
C2	Capacitor	-	0.1μF	-	For exogenous noise
C3	Capacitor	-	0.1μF	-	For exogenous noise
DFET CFET	Nch MOS FET	-	-	-	Charge and discharge control

This typical application circuit and constant value do not guarantee proper operation. Please evaluate thoroughly by actual application to set up constants.

1 cell lithium–ion/lithium–polymer battery protection IC

MM3725/MM3726 Series

Outline

The MM3725/MM3726 series are protection IC using high voltage CMOS process for overcharge, overdischarge andovercurrent protection of the rechargeable Lithium-ion or Lithium-polymer battery. The overcharge, overdischarge,discharging overcurrent, charging overcurrent, and short protection of the rechargeable one-cell Lithium-ion or Lithium-polymer battery can be detected. Each of these IC composed of four voltage detectors, short detection circuit, referencevoltage sources, oscillator, counter circuit and logical circuits.

Features

(Unless otherwise specified, Ta=25°C)

(1) Range and accuracy of detection/release voltage

- Overcharge detection voltage ..... Vdet1 ..... 3.6V to 5.0V ..... ±20m
  5mVstep ..... ±25mV
  (Ta=-20 to 60°C)
- Overcharge release voltage ..... Vrel1 ..... Vdet1-0.2V to Vdet1 ..... ±30mV
  5mV step
- Overdischarge detection voltage ..... Vdet2 ..... 2.0V to 3.0V ..... ±35m
  50mV step
- Overdischarge release voltage ..... Vrel2 ..... 2.0V to 3.0V ..... +50 / -35mV
  (In case Vdet2=Vrel2)
  50mV step ..... +90 / -65mV
  (In case Vdet2≠Vrel2)
- Discharging overcurrent detection voltage ..... Vdet3 ..... 20mV to 300mV ..... ±5mV
  1mV step
- Charging overcurrent detection voltage ..... Vdet4 ..... -300mV to -20mV ..... ±5mV
  1mV step
- Short detection voltage ..... Vshort ..... 40mV to 350mV ..... ±8%
  1mV step
- 0V battery charge inhibition battery voltage ..... Vst ..... 1.3V to 1.8V/0.1V step... ±100mV
  0.9V ..... ±300mV

(2) Range of detection delay time

- Overcharge detection delay time ..... tVdet1 ..... 256ms to 4.6s
- Overdischarge detection delay time ..... tVdet2 ..... 8ms to 256ms
- Discharging overcurrent detection delay time ... tVdet3 ..... 8ms to 256ms
- Charging overcurrent detection delay time ..... tVdet4 ..... 6ms to 64ms
- Short detection delay time ..... tVshort ..... 250μs to 400μs

(3) Current consumption

- Normal mode ..... Typ. 3.0μA, Max. 6.0μA
- Stand-by mode ..... Max. 0.1μA (In case Overdischarge latch function Enable)
  Max 0.6μA (In case Overdischarge latch function Disable)

4) 0V battery Charge function ..... Selectable “Permission” or “Prohibition”

5) Absolute maximum ratings

- VDD pin ..... VSS–0.3V to +12V
- COUT pin and V- pin ..... VDD–28V to VDD+0.3V
- DOUT pin and CS pin ..... VSS–0.3V to VDD+0.3V
- Storage temperature ..... –55 to +125°C
- Operation temperature ..... –40 to +85°C

Pin assignment

SSON-6J

(Top view)

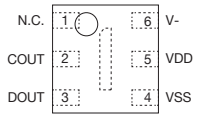

SON-6C

(Top view)

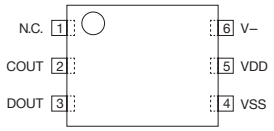

Pin no.	Symbol	Function
1	N.C.	None connection
2	COUT	Charge FET control terminal
3	DOUT	Discharge FET control terminal
4	VSS	Negative power supply voltage input terminal
5	VDD	Positive power supply voltage input terminal
6	V-	Current detection terminal

LINE UP

MODEL	Package	0V charge	Protection mode latch function			Hys-Cancel		Overcharge detection voltage	Overcharge release voltage	Overdischarge detection voltage	Overdischarge release voltage	Discharging overcurrent detection voltage	Charging overcurrent detection voltage	Short detection voltage	Delay time *1
			Overcharge	Overdischarge	Discharge overcurrent	Overcharge	Overdischarge	Vdet1	Vrel1	Vdet2	Vrel2	Vdet3	Vdet4	Vshort	
								V	V	V	V	V	V	V	
MM3725AC2YRE	SON-6C	0.9	Disable	Disable	Disable	Enable	Enable	4.475	4.275	2.500	2.900	0.045	-0.040	0.100	A
MM3725AC7YLE	SON-6C	1.2	Disable	Disable	Disable	Enable	Enable	4.550	4.250	2.300	2.500	0.025	-0.030	0.075	J
MM3725AC9YRE	SON-6C	0.9	Disable	Disable	Disable	Enable	Enable	4.475	4.275	2.500	2.900	0.055	-0.045	0.100	L
MM3725ACCYLE	SON-6C	0.9	Disable	Disable	Disable	Enable	Enable	4.475	4.275	2.500	2.900	0.020	-0.020	0.070	F
MM3725AM1YRE	SON-6C	0.9	Disable	Disable	Disable	Enable	Enable	4.475	4.275	2.500	2.900	0.065	-0.050	0.190	B
MM3725AM4YRE	SON-6C	0.9	Disable	Disable	Disable	Enable	Enable	4.425	4.225	2.500	2.800	0.025	-0.025	0.075	E
MM3725AM5YRE	SON-6C	0.9	Disable	Disable	Disable	Enable	Enable	4.475	4.275	2.500	2.900	0.045	-0.040	0.095	F
MM3725AMHYLE	SON-6C	0.9	Disable	Disable	Disable	Enable	Enable	4.475	4.275	2.500	2.800	0.024	-0.024	0.070	O
MM3725AN1YRE	SON-6C	Permission	Disable	Disable	Disable	Enable	Enable	4.425	4.225	2.500	2.900	0.080	-0.080	0.230	G
MM3725ANBYRE	SON-6C	Permission	Disable	Disable	Disable	Enable	Enable	4.475	4.275	2.500	2.800	0.060	-0.050	0.160	E
MM3725AR1YLE	SON-6C	Permission	Disable	Disable	Disable	Enable	Enable	4.475	4.275	2.500	2.900	0.055	-0.055	0.150	M
MM3725CM2YLE	SON-6C	0.9	Disable	Enable	Disable	Enable	-	4.470	4.270	2.500	2.500	0.025	-0.025	0.100	N
MM3725CM2RLE	SSON-6J	0.9	Disable	Enable	Disable	Enable	-	4.470	4.270	2.500	2.500	0.025	-0.025	0.100	N
MM3725CM3YRE	SON-6C	0.9	Disable	Enable	Disable	Enable	-	4.275	4.075	2.500	2.500	0.025	-0.020	0.080	M
MM3725CN2YRE	SON-6C	Permission	Disable	Enable	Disable	Enable	-	4.280	4.080	3.000	3.000	0.030	-0.030	0.205	E
MM3726AM6YRE	SON-6C	0.9	Disable	Disable	Disable	Enable	Enable	4.475	4.275	2.400	2.800	0.150	-0.125	0.350	G
MM3726AM7YRE	SON-6C	0.9	Disable	Disable	Disable	Enable	Enable	4.550	4.250	2.000	2.400	0.075	-0.055	0.250	C
MM3726AN2YLE	SON-6C	Permission	Disable	Disable	Disable	Enable	Enable	4.425	4.225	2.500	2.800	0.055	-0.055	0.255	G
MM3726ANAYLE	SON-6C	Permission	Disable	Disable	Disable	Enable	Enable	4.475	4.275	2.500	2.800	0.055	-0.055	0.255	G

*1 Delay time

	tVdet1	tVrel1	tVdet2	tVrel2	tVdet3	tVrel3	tVdet4	tVrel4	tshort
	s	ms	ms	ms	ms	ms	ms	ms	μs
A	1.024	16.00	20.00	1.00	12.00	1.00	8.00	1.00	300
B	1.024	16.00	32.00	1.00	16.00	1.00	4.00	1.00	280
C	1.024	16.00	64.00	1.00	16.00	1.00	8.00	1.00	280
D	1.024	16.00	64.00	1.00	8.00	1.00	4.00	1.00	280
E	1.024	16.00	32.00	1.00	8.00	1.00	8.00	1.00	280
F	1.024	16.00	64.00	1.00	16.00	1.00	16.00	1.00	280
G	1.024	16.00	64.00	1.00	8.00	1.00	8.00	1.00	280
H	1.024	16.00	64.00	1.00	32.00	1.00	16.00	1.00	280
I	1.024	16.00	32.00	1.00	16.00	1.00	16.00	1.00	280
J	1.024	16.00	32.00	1.00	16.00	1.00	16.00	1.00	530
K	1.024	16.00	128.00	1.00	8.00	1.00	8.00	1.00	280
L	1.024	16.00	20.00	1.00	12.00	1.00	8.00	1.00	280
M	1.024	16.00	20.00	1.00	12.00	1.00	8.00	1.00	250
N	1.024	16.00	32.00	1.00	12.00	1.00	12.00	1.00	280
O	1.024	16.00	20.00	1.00	10.00	1.00	8.00	1.00	300

*Please inquire to us, if you need another spec.

N channel high side FET drive by charge pump

MM3746 Series

Outline

MM3746 series are protection ICs with charger pump and drive high side N channel FET for Lithium-ion and Lithium-polymer secondary battery. This IC is most suitable for the intelligent battery pack with which I communicate data between the battery pack and the system.
And MM3746 series has a temperature detection by using a NTC Thermistor, protects the battery pack and system from over temperature.

Features

(Unless otherwise specified, Ta=25°C)

(1) Range and accuracy of detection/release voltage

- Overcharge detection voltage..... Vdet1 ..... 4.2V to 4.6V, 5mV steps.....Accuracy±15mV
- Overdischarge detection voltage ..... Vdet2 ..... 2.0V to 3.0V, 50mV steps.....Accuracy±40mV
- Discharging overcurrent detection voltage ..... Vdet3 ..... 10mV to 150mV, 1mV steps.....Accuracy±3.0mV *1
- Charging overcurrent detection voltage ..... Vdet4 ..... –150mV to –10mV, 1mV steps .....Accuracy±3.0mV *1
- Short detection voltage..... Vshort ..... 40mV to 300mV, 50mV steps..... Accuracy±5.0mV
- 0V battery charge inhibition battery voltage ..... Vst ..... ±1.3V fixed ..... Accuracy±150mV
- Temperature detection ..... Tdet ..... 55 to 85°C..... Accuracy±5.0°C

*1 Accuracy of overcurrent detection voltage (Ta=25°C)

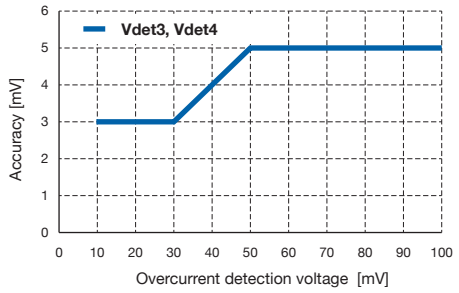

(2) Temperature detection function.....Selectable “Enable” or “Disable”

(3) 0V battery charge function .....Selection from “Permission” or “Inhibition”

(4) Current consumption (Not include NTC bias current)

- Normal mode .....Typ. 6.0μA, Max. 10.0μA
- Stand-by mode .....Max. 0.1μA (Overdischarge latch function Enable)
  Max. 1.2μA (Overdischarge latch function Disable)

Pin assignment

WLCSP-10A

(Top view)

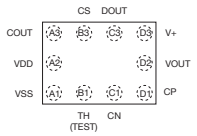

Pin no.	Symbol	Function
A1	VSS	Negative power supply voltage input terminal
A2	VDD	Positive power supply voltage input terminal
A3	COUT	Charge FET control terminal
B1	TH(TEST)	Temperature level detect terminal (Test terminal)
B3	CS	Current level detect terminal
C1	CN	Flying capacitor connecting terminal
C3	DOUT	Discharge FET control terminal
D1	CP	Flying capacitor connecting terminal
D2	VOUT	Charge pump output terminal
D3	V+	Charger positive voltage input terminal

LINE UP

Product name	Package	Overcharge detection	Overdischarge detection	Discharging overcurrent detection	Charging overcurrent detection	Short detection	Temperature detection resistance	Overcharge detection latch function	Overcharge hysteresis cancel	Overdischarge detection latch function	Overdischarge hysteresis cancel	0V battery charge function	Temperature detection function	Delay time *1
		Vdet1	Vdet2	Vdet3	Vdet4	Vshort	RdetTH							
		V	V	mV	mV	mV	---							
MM3746BB1LBE	WLCSP-10A	4.270	2.300	13.0	-10.0	40.0	---	Disable	Enable	Enable	Disable	Inhibition	Disable	A
MM3746BC1LBE	WLCSP-10A	4.490	2.900	33.0	-17.0	140.0	---	Disable	Enable	Enable	Disable	Inhibition	Disable	B

*1 Delay time

	tVdet1	tVdet2	tVdet3	tVdet4	tshort1	tVtdet
	ms	ms	ms	ms	μs	---
A	1020	128	16.0	8.0	250	---
B	1020	16	16.0	8.0	250	---

Please inquire to us, if you request a rank other than the above.

Typical application circuit

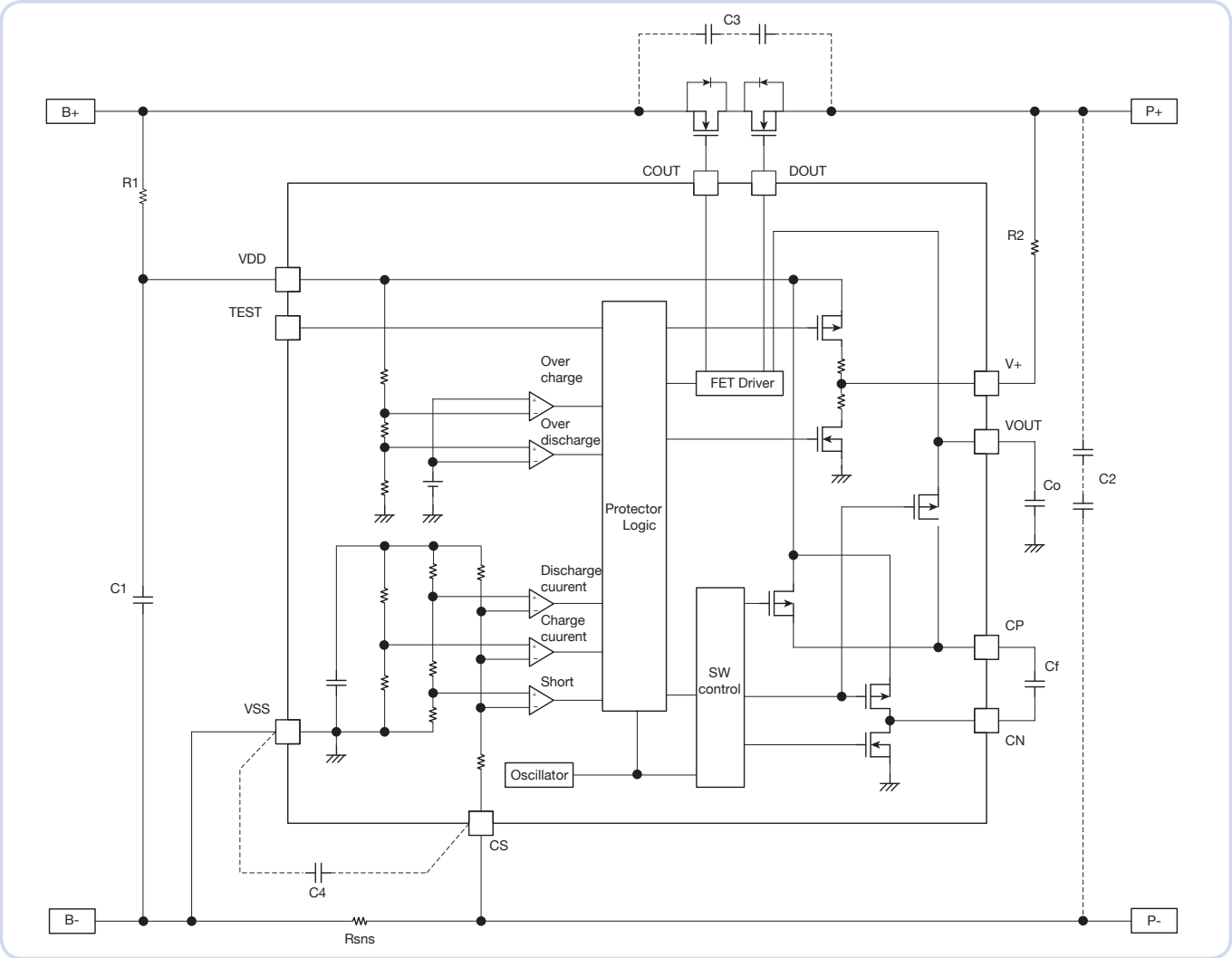

- The characteristics of the charge pump (ripple voltage, output current ability, etc.) are decided by the capacitor (C1, Cf, Co). Please select ceramic capacitor with a small ESR(Equivalent Series Resistance). Please arrange Cf near the CN and CP terminal.
- R1 and C1 help to stabilize a supply voltage fluctuation. 0.1μF or more is recommended for C1 to secure stable operation. The value of Cf and Co affects the output current drivability and the output voltage ripple respectively. The recommend value of Cf and Co is 0.047μF to drive CFET and DFET with no fail.
- The detection voltage rises by the current consumption (IDD) of IC when R1 is too large. 300Ω or less is recommended for R1. The variation of overcharge detection voltage (ΔVdet1) is expressed in the following equation.

  $\Delta Vdet1 = R1 * IDD$
- R1 and R2 are useful for the current limiting resistance if a charger is connected reversely or a high-voltage charger that exceeds the absolute maximum rating is connected. If total value of “R1+R2” is too small, it may exceed allowed power dissipation of IC. Please have total value of “R1 and R2” should be more than 300ohm. If R2 is too large, CFET may not be able to turn off, therefore please use 10kohm or less.
- C2, C3 and C4 are useful to improve the system stability against the voltage ripple and exogenous noise. Please consider whether or not capacitors should be placed, the area should be placed, and capacitance value in consideration of the system characteristic. Especially C4 prevents false discharge overcurrent detection.
- Current threshold of discharging overcurrent detection and short detection (Idoc, Icoc, Ishort) are expressed in the following equations.

  $Idoc = Vdet3 / Rsns$
  $Icoc = Vdet4 / Rsns$
  $Ishort = Vshort / Rsns$

Thermal protection and control terminal for charge and discharge off mode protection IC

MM3855 Series

Outline

MM3855 series are protection ICs with thermal protection and control teminal for charge and discharge off mode for Lithium-ion and Lithium-polymer rechargeable battery.
By using external thermistor, this protects the battery pack and system over temperature. In addition, it reduces the current consumption of system by using charge and dischrge off mode , when the system is shutdown.

Features

(Unless otherwise specified, Ta=25°C)

(1) Range and accuracy of detection/release voltage

- Overcharge detection voltage.....Vdet1 .....4.1V to 5.0V..... ±20mV
  5mVstep ±20mV(Ta=-20 to +60°C)
- Overdischarge detection voltage.....Vdet2 .....2.1V to 3.0V..... ±35m
  50mV step ±40mV(Ta=-20 to +60°C)
- Discharging overcurrent detection voltage1 .....Vdet3-1.....6mV to 100mV..... ±2.5mV
  1mV step ±3.0mV (Ta=-20 to +60°C)*1
- Discharging overcurrent detection voltage2 .....Vdet3-2.....15mV to 100mV..... ±3.5mV
  1mV step ±4.0mV (Ta=-20 to +60°C)*1
- Charging overcurrent detection voltage.....Vdet4 .....-6mV to -100mV..... ±2.5mV
  1mV step ±3.0mV(Ta=-20 to +60°C)*1
- Short detection voltage.....tShort.....30mV to 200mV..... ±5.0mV
  10mV step ±5.5mV (Ta=-20 to +60°C)*1
- 0V battery charge inhibition battery voltage .....Vst .....0.9V ..... ±0.3V

*1 Accuracy of overcurrent detection voltage (Ta=25 °C)

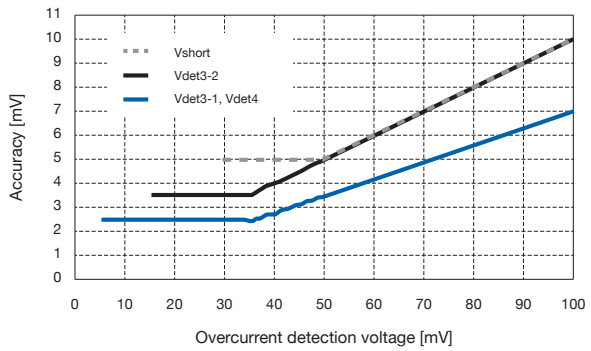

(2) Temperature detection function.....Selectable “Enable” or “Disable”

(3) 0V battery charge function .....Selectable “Permission” or “Inhibition”

4) Control terminal for charge and discharge off mode

5) Current consumption..... (Not include NTC bias current)

- Normal mode .....Temperature detection function “Enable” 3.0μA typ.
  5.0μA max. (Ta=-20 to +85°C)
  Temperature detection function “Disable” 2.5μA typ.
  4.5μA max. (Ta=-20 to +85°C)
- Standby mode .....Overdischarge latch function “Enable” ... 0.1μA max. (Ta=-20 to +60°C)
  Overdischarge latch function “Disable”... 0.8μA max. (Ta=-20 to +85°C)

Pin assignment

SSON-8F SSON-8G

(Top view)

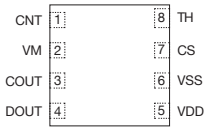

Pin no.	Symbol	Function
1	CNT	Control terminal for charge and discharge FET
2	VM	Input terminal for charger negative voltage
3	COUT	Control terminal for charge FET
4	DOUT	Control terminal for discharge FET
5	VDD	Input terminal for negative power supply voltage
6	VSS	Input terminal for positive power supply voltage
7	CS	Input terminal for overcurrent detection
8	TH	Input terminal for temperature detection

LINE UP

Model	Overcharge detection	Overdischarge detection	Discharging overcurrent detection 1	Discharging overcurrent detection 2	Charging overcurrent detection	Short detection1	Temperature detection resistance	Overcharge detection latch function	Overdischarge detection latch function	Discharging overcurrent latch functio	Charging overcurrent latch function	0V battery charge function	Temperature detection function	Delay time *1
	Vdet1	Vdet2	Vdet3-1	Vdet3-2	Vdet4	Vshort1	RdetTH							
	V	V	mV	mV	mV	V	---							
MM3855AJ1	4.475	2.400	35.0	50.000	-35.0	100.0	90kΩ	Disable	Disable	Disable	Enable	Permission	Enable	(A)
MM3855AL1	4.475	2.500	20.5	29.500	-26.5	70.0	No function	Disable	Disable	Disable	Enable	Permission	Disable	(B)
MM3855AL2	4.475	2.500	22.5	No function	-21.0	100.0	No function	Disable	Disable	Disable	Enable	Permission	Disable	(C)
MM3855EN5	4.470	2.465	13.0	No function	-15.0	50.0	90kΩ	Enable	Enable	Disable	Enable	Permission	Enable	(D)
MM3855EN7	4.450	2.600	36.0	No function	-21.0	90.0	48kΩ	Enable	Enable	Disable	Enable	Permission	Enable	(E)

Delay time *1

	tVdet1	tVdet2	tVdet3-1	tVdet3-2	tVdet4	tShort1	tCDGdet	tRdetTH
	sec	msec	msec	msec	msec	μsec	msec	msec
A	1.024	64	4096	16	16	280	48	512
B	1.024	64	4096	16	16	280	48	No function
C	1.024	20	16	No function	16	300	48	No function
D	1.024	128	8	No function	8	250	48	512
E	1.024	2048	2048	No function	8	280	48	64

*Please inquire to us, if you need another spec.

1 cell lithium–ion/lithium–polymer battery protection IC

MM3856 Series

Outline

MM3856 series are Li-ion battery protection IC and detect charge current / discharge current with high precision by current sensing resistor (Rsns). MM3856 have two step discharge overcurrent detection. And system is protected appropriately in the next 2 state, Normal discharge mode and large current discharge mode.

Features

(Unless otherwise specified, Ta=25°C)

(1) Range and accuracy of detection/release voltage

- Overcharge detection voltage.....4.1V to 5.0V, 5mV steps ..... +/-20mV(Ta=-20 to +60 degC)
- Overdischarge detection voltage.....2.1V to 3.0V, 50mV steps ..... +/-35mV
- Discharging overcurrent detection voltage1 .....15mV to +100mV, 1mV steps ..... ※1
- Discharging overcurrent detection voltage2 .....30mV to +100mV, 1mV steps ..... ※1
- Charging overcurrent detection voltage.....-15mV to -100mV, 1mV steps ..... ※1
- Short detection voltage1.....50mV to 200mV, 50mV steps ..... ※2
- 0V battery charge inhibition battery voltage .....1.3 to 1.8V, 0.1V steps..... +/-0.1V
  0.9V fixed..... +/-0.3V

※1 Accuracy of overcurrent detection voltage

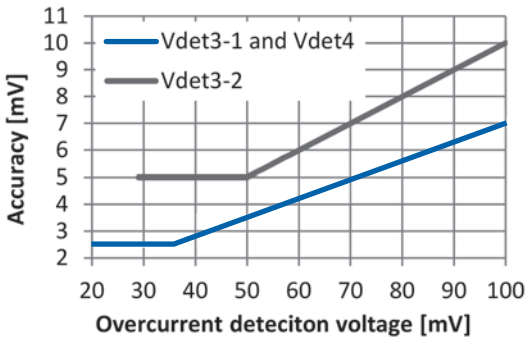

※2 Accuracy of Short detection voltage1
+/-20mV (Discharging overcurrent detection voltage 2 disable.)
+/-25mV (Discharging overcurrent detection voltage 2 enable.)

(2) 0V battery charge function .....Selectable "Permission" or "inhibition"

(3) Current consumption at Ta=25 degC

- Normal mode .....2.5uA typ.4.0uA max.
- Standby mode .....0.1uA max. (Overdischarge latch function enable.)
  0.6uA max. (Overdischarge latch function disable.)

Pin assignment

SON-6C

(Top view)

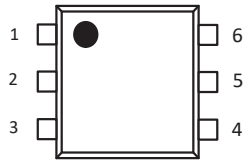

Pin no.	Symbol	Function
1	V-	Input terminal for charger negative voltage
2	COUT	Control terminal for charge FET
3	DOUT	Control terminal for discharge FET
4	VSS	Input terminal for negative power supply voltage
5	VDD	Input terminal for positive power supply voltage
6	CS	Input terminal for overcurrent detection

SSON-6J/6M

(Top view)

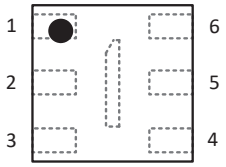

Pin no.	Symbol	Function
1	VSS	Input terminal for negative power supply voltage
2	VDD	Input terminal for positive power supply voltage
3	CS	Input terminal for overcurrent detection
4	V-	Input terminal for charger negative voltage
5	COUT	Control terminal for charge FET
6	DOUT	Control terminal for discharge FET

LINE UP

MODEL	Package	0V charge	Protection mode latch function			Hys-Cancel		Overcharge detection voltage	Overcharge release voltage	Overdischarge detection voltage	Overdischarge release voltage	Discharging overcurrent detection voltage1	Discharging overcurrent detection voltage2	Charging overcurrent detection voltage	Short detection voltage1	Delay time *1
			Overcharge	Overdischarge	Discharge overcurrent	Overcharge	Overdischarge	Vdet1	Vrel1	Vdet2	Vrel2	Vdet3-1	Vdet3-2	Vdet4	Vshort1	
								V	V	V	V	mV	mV	mV	mV	
MM3856AF1RRE	SSON-6JorM	1.6	Disable	Disable	Disable	Enable	Enable	4.475	4.275	2.800	3.000	17.0	30.0	-17.0	55.0	J
MM3856AJ2YLE	SON-6C	Permission	Disable	Disable	Disable	Enable	Enable	4.525	4.350	2.100	2.300	20.5	29.5	-33.5	70.0	A
MM3856AM1YLE	SON-6C	0.9	Disable	Disable	Disable	Enable	Enable	4.475	4.275	2.500	2.900	21.0	-	-21.0	80.0	D
MM3856AM2YLE	SON-6C	0.9	Disable	Disable	Disable	Enable	Enable	4.520	4.320	2.100	2.300	21.0	-	-24.0	100.0	E
MM3856AM4YLE	SON-6C	0.9	Disable	Disable	Disable	Enable	Enable	4.220	4.165	2.500	2.900	22.5	-	-22.5	45.0	E
MM3856AN2YLE	SON-6C	Permission	Disable	Disable	Disable	Enable	Enable	4.520	4.320	2.300	2.700	36.0	-	-30.0	100.0	C
MM3856AN3RLE	SSON-6JorM	Permission	Disable	Disable	Disable	Enable	Enable	4.475	4.275	2.500	2.900	21.0	-	-27.0	80.0	D
MM3856AN3YLE	SON-6C	Permission	Disable	Disable	Disable	Enable	Enable	4.475	4.275	2.500	2.900	21.0	-	-27.0	80.0	D
MM3856AN4RLE	SSON-6JorM	Permission	Disable	Disable	Disable	Enable	Enable	4.520	4.320	2.100	2.300	21.0	-	-33.0	100.0	E
MM3856AN4YLE	SON-6C	Permission	Disable	Disable	Disable	Enable	Enable	4.520	4.320	2.100	2.300	21.0	-	-33.0	100.0	E
MM3856AN5YLE	SON-6C	Permission	Disable	Disable	Disable	Enable	Enable	4.475	4.275	2.500	2.900	21.0	-	-21.0	80.0	D
MM3856AN6YLE	SON-6C	Permission	Disable	Disable	Disable	Enable	Enable	4.520	4.320	2.100	2.300	21.0	-	-24.0	100.0	E
MM3856AN7YRE	SON-6C	Permission	Disable	Disable	Disable	Enable	Enable	4.475	4.275	2.600	3.000	21.0	-	-21.0	50.0	G
MM3856AN8YRE	SON-6C	Permission	Disable	Disable	Disable	Enable	Enable	4.520	4.320	2.300	2.700	21.0	-	-21.0	70.0	H
MM3856AN9YLE	SON-6C	Permission	Disable	Disable	Disable	Enable	Enable	4.520	4.320	2.300	2.700	22.5	-	-27.0	110.0	I
MM3856KF5RRE	SSON-6JorM	1.2	Enable	Enable	Disable	-	-	4.500	4.500	2.400	2.400	36.0	-	-28.0	90.0	F

*Please inquire to us, if you need another spec.

*1 Delay time

	tVdet1	tVrel1	tVdet2	tVrel2	tVdet3-1	tVrel3-1	tVdet3-2	tVrel3-2	tVdet4	tVrel4	tshort
	s	ms	ms	ms	ms	ms	ms	ms	ms	ms	μs
A	1.024	1.00	64.00	1.00	4096.00	8.00	16.00	8.00	16.00	4.00	280
B	1.024	1.00	64.00	1.00	16.00	8.00	-	-	16.00	1.00	280
C	1.024	1.00	64.00	1.00	32.00	8.00	-	-	16.00	1.00	400
D	1.024	1.00	64.00	1.00	224.00	8.00	-	-	16.00	1.00	250
E	1.024	1.00	64.00	1.00	448.00	8.00	-	-	16.00	1.00	250
F	1.024	1.00	2048.00	1.00	2048.00	4.00	-	-	16.00	1.00	280
G	1.024	1.00	64.00	1.00	16.00	8.00	-	-	8.00	1.00	280
H	1.024	1.00	64.00	1.00	32.00	8.00	-	-	16.00	1.00	530
I	1.024	1.00	40.00	1.00	64.00	8.00	-	-	16.00	1.00	280
J	1.024	16.00	256.00	1.00	128.00	1.00	16.00	1.00	64.00	1.00	300

Typical application circuit

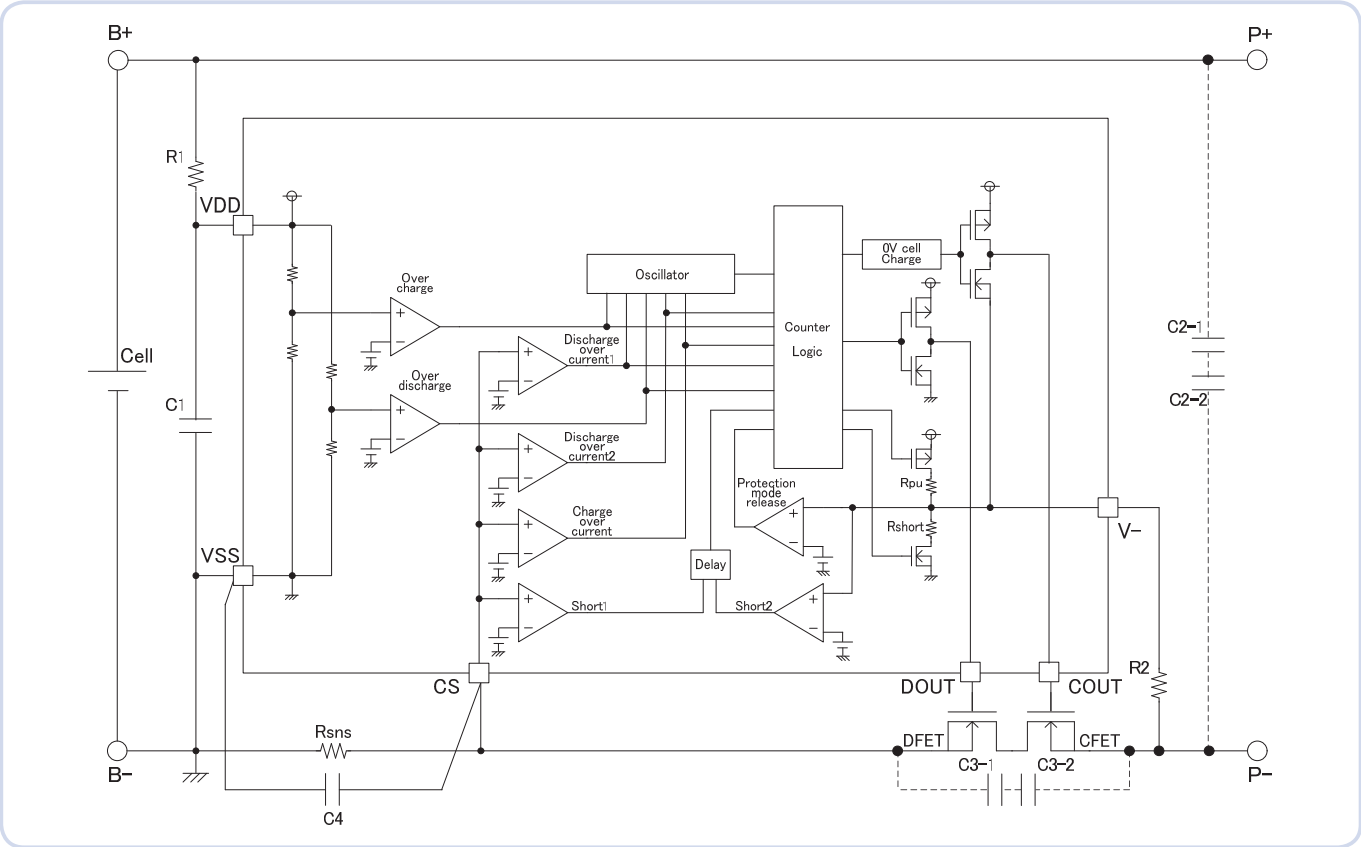

Symbol	Part	Min.	Typ.	Max.	Unit	Purpose
R1	Resistor	-	100	1k	Ω	For voltage fluctuation and ESD
R2	Resistor	-	1k	10k	Ω	For current limit of charger reverse connection
Rsns	Resistor	-	-	-	-	Charge and discharge curent sensing
C1	Capacitor	0.01u	0.1u	1.0u	F	For voltage fluctuation
C2	Capacitor	-	0.1u	-	F	For exogenous noise
C3	Capacitor	-	0.1u	-	F	For exogenous noise
C4	Capacitor	-	0.1u	-	F	For exogenous noise
DFET CFET	Nch MOS FET	-	-	-	-	Charge and discharge control

*The above application circuit and constant value do not guarantee proper operation.
*Please evaluate thoroughly by actual application to set up constants.

1 cell lithium–ion/lithium–polymer battery protection IC

MM3860 Series

Outline

MM3860 series are Li-ion battery protection IC and detect charge current / discharge current with high precision by current sensing resistor (Rsns). MM3860 have two step discharge overcurrent detection. And system is protected appropriately in the next 2 state, Normal discharge mode and large current discharge mode.

Features

(Unless otherwise specified, Ta=25°C)

(1) Range and accuracy of detection/release voltage

- Overcharge detection voltage.....4.1V to 5.0V, 5mV steps ..... +/-20mV(Ta=-20 to +60 degC)
- Overdischarge detection voltage.....2.1V to 3.0V, 50mV steps ..... +/-35mV
- Discharging overcurrent detection voltage 1 .....6mV to +50mV, 1mV steps ..... +/-1mV
- Discharging overcurrent detection voltage 2 .....10mV to +100mV, 1mV steps ..... +/-2mV
- Charging overcurrent detection voltage.....-6mV to -50mV, 1mV steps ..... +/-1mV
- Short detection voltage1.....30mV to 200mV, 10mV steps ..... +/-5mV
- 0V battery charge inhibition battery voltage .....0.9V fixed.....+/-0.3V

(2) 0V battery charge function .....Selectable "Permission" or "inhibition"

(3) Current consumption at Ta=25 degC

- Normal mode .....2.5uA typ.4.0uA max.
- Standby mode .....0.1uA max. (Overdischarge latch function enable.)
  0.6uA max. (Overdischarge latch function disable.)

Pin assignment

SON-6F

(Top view)

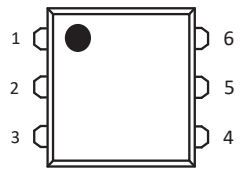

Pin no.	Symbol	Function
1	VM	Input terminal for charger negative voltage
2	COUT	Control terminal for charge FET
3	DOUT	Control terminal for discharge FET
4	VSS	Input terminal for negative power supply voltage
5	VDD	Input terminal for positive power supply voltage
6	CS	Input terminal for overcurrent detection

SSON-6J/6M

(Top view)

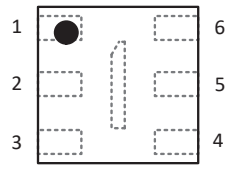

Pin no.	Symbol	Function
1	VSS	Input terminal for negative power supply voltage
2	VDD	Input terminal for positive power supply voltage
3	CS	Input terminal for overcurrent detection
4	VM	Input terminal for charger negative voltage
5	COUT	Control terminal for charge FET
6	DOUT	Control terminal for discharge FET

LINE UP

MODEL	Package	0V charge	Protection mode latch function			Hys-Cancel		Overcharge detection voltage	Overcharge release voltage	Overdischarge detection voltage	Overdischarge release voltage	Discharging overcurrent detection voltage1	Discharging overcurrent detection voltage2	Charging overcurrent detection voltage	Short detection voltage1	Delay time *1
			Overcharge	Overdischarge	Discharge overcurrent	Overcharge	Overdischarge	Vdet1	Vrel1	Vdet2	Vrel2	Vdet3-1	Vdet3-2	Vdet4	Vshort1	
								V	V	V	V	mV	mV	mV	mV	
MM3860AL1ZRE	SON-6F	Permission	Disable	Disable	Disable	Enable	Enable	4.475	4.275	2.500	2.900	7.0	20.0	-7.0	70.0	A
MM3860AL2ZRE	SON-6F	Permission	Disable	Disable	Disable	Enable	Enable	4.530	4.330	2.100	2.300	14.0	20.0	-20.0	55.0	B
MM3860AL3ZRE	SON-6F	Permission	Disable	Disable	Disable	Enable	Enable	4.530	4.330	2.100	2.300	10.5	15.0	-15.0	40.0	B
MM3860AL4ZRE	SON-6F	Permission	Disable	Disable	Disable	Enable	Enable	4.550	4.350	2.100	2.300	7.0	10.0	-10.0	27.0	B
MM3860AL5ZRE	SON-6F	0.9	Disable	Disable	Disable	Enable	Enable	4.475	4.275	2.500	2.900	15.0	-	-15.0	32.0	C
MM3860AL6ZRE	SON-6F	0.9	Disable	Disable	Disable	Enable	Enable	4.520	4.320	2.300	2.500	15.0	-	-15.0	36.0	D
MM3860AL7ZRE	SON-6F	Permission	Disable	Disable	Disable	Enable	Enable	4.500	4.300	2.100	2.300	7.0	10.0	-13.0	27.0	B
MM3860ALDZRE	SON-6F	Permission	Disable	Disable	Disable	Enable	Enable	4.530	4.330	2.350	2.550	21.0	33.0	-24.0	80.0	I
MM3860ALEZRE	SON-6F	Permission	Disable	Disable	Disable	Enable	Enable	4.550	4.350	2.100	2.300	21.0	33.0	-30.0	80.0	I
MM3860ALFZRE	SON-6F	Permission	Disable	Disable	Disable	Enable	Enable	4.530	4.330	2.350	2.550	7.0	12.0	-12.0	28.0	I
MM3860ALGZRE	SON-6F	Permission	Disable	Disable	Disable	Enable	Enable	4.550	4.350	2.100	2.300	7.0	12.0	-14.0	28.0	I
MM3860AN1ZRE	SON-6F	Permission	Disable	Disable	Disable	Enable	Enable	4.445	4.245	2.500	2.900	21.0	-	-16.0	60.0	G
MM3860AN2ZRE	SON-6F	Permission	Disable	Disable	Disable	Enable	Enable	4.480	4.380	2.300	2.700	23.0	-	-18.0	60.0	H
MM3860AN3ZRE	SON-6F	Permission	Disable	Disable	Disable	Enable	Enable	4.445	4.245	2.500	2.900	21.0	-	-22.0	60.0	G
MM3860AN4ZRE	SON-6F	Permission	Disable	Disable	Disable	Enable	Enable	4.480	4.380	2.300	2.700	23.0	-	-24.0	60.0	H
MM3860AN5ZRE	SON-6F	Permission	Disable	Disable	Disable	Enable	Enable	4.445	4.245	2.500	2.900	11.0	-	-12.5	30.0	G
MM3860AN6ZRE	SON-6F	Permission	Disable	Disable	Disable	Enable	Enable	4.480	4.380	2.300	2.700	13.0	-	-14.0	30.0	H
MM3860AN7ZRE	SON-6F	Permission	Disable	Disable	Disable	Enable	Enable	4.480	4.380	2.300	2.700	7.0	-	-7.5	18.0	H
MM3860AN8ZRE	SON-6F	Permission	Disable	Disable	Disable	Enable	Enable	4.450	4.250	2.500	2.900	14.5	22.0	-16.0	60.0	J
MM3860AN9ZRE	SON-6F	Permission	Disable	Disable	Disable	Enable	Enable	4.485	4.385	2.300	2.700	14.5	24.0	-18.0	60.0	K
MM3860ANAZRE	SON-6F	Permission	Disable	Disable	Disable	Enable	Enable	4.450	4.250	2.500	2.900	7.5	12.0	-12.5	30.0	J
MM3860ANBZRE	SON-6F	Permission	Disable	Disable	Disable	Enable	Enable	4.485	4.385	2.300	2.700	7.5	14.0	-14.0	30.0	K
MM3860CF1ZRE	SON-6F	0.9	Disable	Enable	Disable	Enable	Disable	4.390	4.190	2.400	2.400	6.0	-	-6.0	30.0	E
MM3860EF2RRE	SSON-6JorM	0.9	Enable	Enable	Disable	-	-	4.525	4.525	2.300	2.300	6.5	11.0	-7.5	20.0	F
MM3860EF3RRE	SSON-6JorM	0.9	Enable	Enable	Disable	-	-	4.535	4.535	2.300	2.300	6.5	12.0	-7.5	20.0	F

*1 Delay time

	tVdet1	tVrel1	tVdet2	tVrel2	tVdet3-1	tVdet3-2	tVrel3	tVdet4	tVrel4	tshort
	s	ms	ms	ms	ms	ms	ms	ms	ms	μs
A	1.024	1.00	64.00	1.00	4096.00	16.00	8.00	16.00	4.00	280
B	1.024	1.00	64.00	1.00	3584.00	16.00	8.00	16.00	1.00	280
C	1.024	1.00	32.00	1.00	64.00	-	8.00	16.00	4.00	250
D	1.024	1.00	64.00	1.00	128.00	-	8.00	64.00	4.00	250
E	1.024	16.00	20.00	1.00	12.00	-	2.00	16.00	1.00	250
F	1.024	16.00	32.00	1.00	3584.00	32.00	8.00	32.00	1.00	250
G	1.024	16.00	128.00	4.00	16.00	-	4.00	8.00	4.00	280
H	1.024	16.00	128.00	1.00	32.00	-	4.00	32.00	4.00	530
I	1.024	1.00	64.00	1.00	3584.00	16.00	8.00	16.00	4.00	280
J	1.024	16.00	128.00	4.00	3584.00	16.00	4.00	8.00	4.00	280
K	1.024	16.00	128.00	1.00	3584.00	32.00	4.00	32.00	4.00	530

*Please inquire to us, if you need another spec.

Typical application circuit

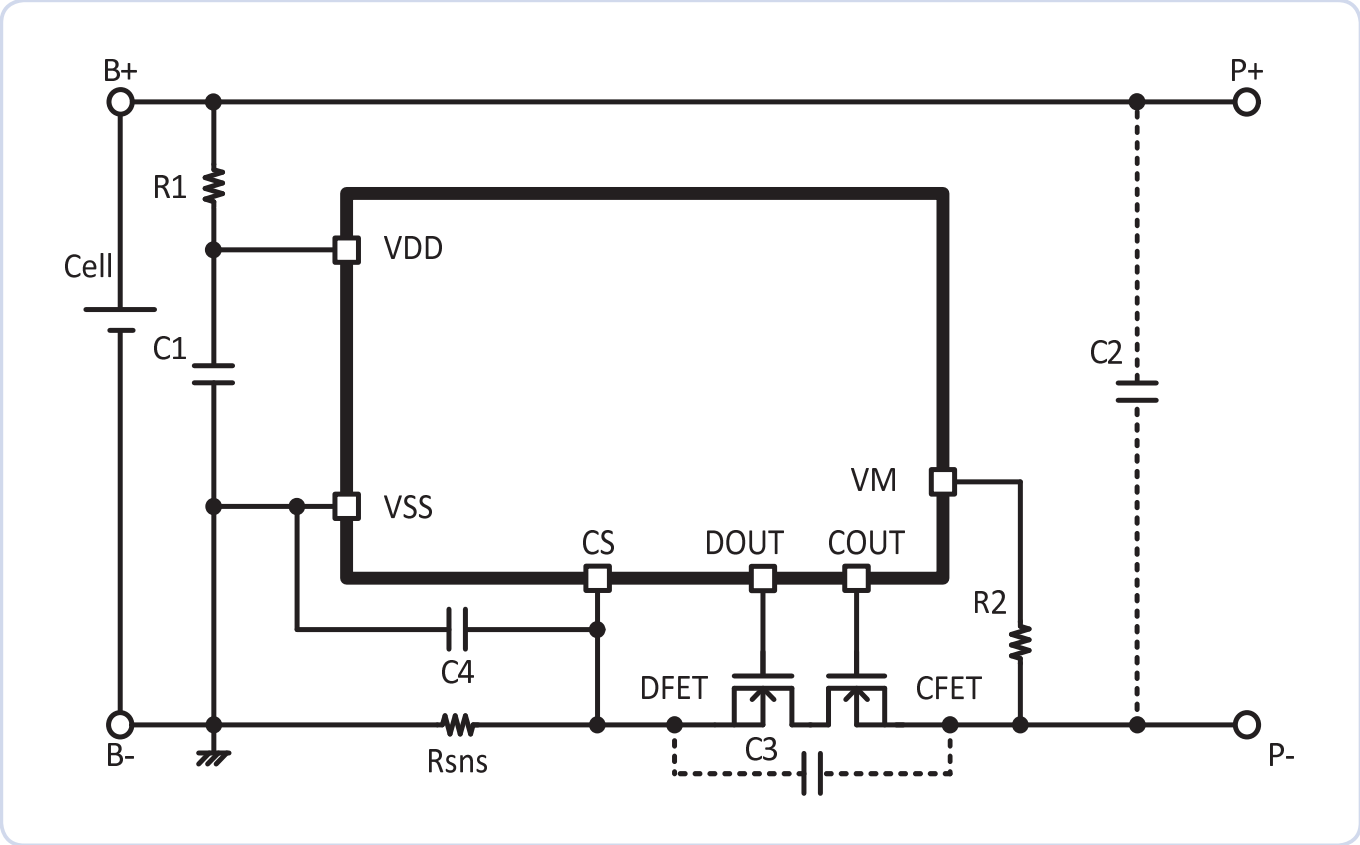

Symbol	Part	Min.	Typ.	Max.	Unit	Purpose
R1	Resistor	-	100	1k	Ω	For voltage fluctuation and ESD
R2	Resistor	-	1k	10k	Ω	For current limit of charger reverse connection
Rsns	Resistor	-	-	-	-	Charge and discharge curent sensing
C1	Capacitor	0.01u	0.1u	1.0u	F	For voltage fluctuation
C2	Capacitor	-	0.1u	-	F	For exogenous noise
C3	Capacitor	-	0.1u	-	F	For exogenous noise
C4	Capacitor	-	0.1u	-	F	For exogenous noise
DFET CFET	Nch MOS FET	-	-	-	-	Charge and discharge control

*The above application circuit and constant value do not guarantee proper operation.
*Please evaluate thoroughly by actual application to set up constants.

1 cell lithium–ion/lithium–polymer battery protection IC

MC3002 Series

Outline

MC3002 series are protection IC with integrated MOS-FET for protection of the rechargeable Lithium–ion or Lithium–polymer battery.The overcharge, overdischarge and discharging and charging overcurrent protection of the rechargeable one-cell Lithium–ion or Lithium–polymer battery can be detected.

Features

(Unless otherwise specified, Ta=25°C)

(1) Range and accuracy of detection/release voltage

- Overcharge detection voltage.....4.15V to 4.50V, 5mV steps ..... Accuracy±22mV
  Accuracy±27mV
  (Topr=–5°C to +60°C)
- Overcharge release voltage .....4.00V to 4.35V *1..... Accuracy±50mV
- Overdischarge detection voltage.....2.00V to 3.00V *2..... Accuracy±100mV
- Overdischarge release voltage.....2.00V to 3.00V *2..... Accuracy±100mV
- Discharge overcurrent detection voltage.....30mV to 100mV, 1mV steps ..... Accuracy±6mV
- Charging overcurrent detect voltage .....–100mV to –30mV, 1mV steps..... Accuracy±9mV
- Short detection voltage.....Selection from 0.36, 0.56, 0.90V ..... Accuracy±100mV
- Over voltage charger detection voltage.....VDD–8.0V fixed ..... Accuracy±2.0V
- Over voltage charger release voltage .....VDD–7.3V fixed..... Accuracy±1.5V

(2) Range of detection delay time

- Overcharge detection delay time.....Selection from 1.0s, 4.5s, 6.25s
- Overdischarge detection delay time .....Selection from 100ms, 256ms
- Discharging overcurrent detection delay time ...Selection from 8ms, 12ms, 16ms, 20ms, 34ms
- Charging overcurrent detection delay time.....Selection from 8.5ms, 25ms, 32.5ms
- Short detection delay time.....Selection from 0.50ms, 0.75ms

(3) 0V battery charge function .....Selection from “Permission” or “Prohibition”

(4) The overcharge detection delay timer reset time function (function for the pulse charge) is provided. fixed

(5) Low current consumption

- Normal mode .....Typ. 3.0μA, Max. 5.2μA
- Stand-by mode .....Max. 0.1μA
  (For “Charger connection release” the overdischarge release condition.)
  Max. 0.5μA
  (For “Voltage release” the overdischarge release condition.)

(6) MOS-FET

- Source to Source on state resistance.....Typ. 10.6mΩ (@VCC=3.7V)

(7) Absolute maximum ratings

- VDD pin.....–0.3V to +8V
- V– pin.....VCC–12V to VCC+0.3V
- Drain-source voltage.....Max. 12V
- Drain current .....Max. 12V
- Total Power Dissipation .....Max. 1.0W
- Storage temperature.....–40°C to +125°C
- Operation temperature.....–40°C to +85°C

*1 Hysteresis voltagebetween Overcharge detection and release voltage is selectable from 0.10V/0.15V/0.20V/0.25V.
*2 Please inquire to us about details of the setting of Overdischarge detection and release voltage.

Pin assignment

PLP-4D

(Top view)

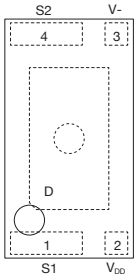

Pin no.	Symbol	Function
1	S1	S1 is a source pin of Discharge MOS-FET and a negative power supply, which is connected to the negative terminal of the battery.
2	VDD	VCC is a positive power supply pin, which is connected to the positive terminal of the battery through Rvcc (330 to 470 ohm).
3	V-	V- is an input pin that detects overcurrent. This pin is connected to the source terminal of Charge MOS-FET through Ridt (2.7 KΩ).
4	S2	S2 is a source pin of Charge MOS-FET, which is connected to a negative power supply terminal of chargers.
–	D	D is a common pin of two drains of Charge MOS-FET and Discharge MOS-FET. D must be open electrically.

LINE UP

Product name	Package	Optional function		Detection / Release voltage							Detection delay time					Optional function	
		0V battery charge function	Dicharge overcuttent detection voltage becomes dependent on VDD	Overcharge detection voltage	Overcharge release voltage	Overdischarge detection voltage	Overdischarge release voltage	Discharging overcurrent detection voltage (@VCC=3.5V)	Charging overcurrent detection voltage (@VCC=3.5V)	Short detection voltage	Overcharge detection delay time	Overdischarge detection delay time	Discharging overcurrent detection delay time	Charging overcurrent detection delay time	Short detection delay time	Discharge current limit (@VCC=3.5V)	Charge current limit (@VCC=3.5V)
		*1	*2	Vdet1	Vrel1	Vdet2	Vrel2	Vdet3	Vdet4	Vshort	tVdet1	tVdet2	tVdet3	tVdet4	tshort	Idischg	Icharge
				V	V	V	V	V	V	V	s	ms	ms	ms	μs	A	A
MC3002CL1GAM	PLP-4D	○	○	4.425	4.225	2.500	2.900	0.073	–0.073	0.360	1.0	100.0	12.0	8.5	500	6.75	6.75
MC3002CL2GAM	PLP-4D	○	○	4.275	4.275	2.300	2.900	0.084	–0.084	0.360	1.0	100.0	20.0	32.5	500	7.80	7.80

*1 0V battery charge function ○ Permission × Prohibition
*2 Optional functions ○ Provided. × Not provided.

PLP-4D … 5,000pcs/Reel

Please inquire to us, if you request a rank other than the above.

Typical application circuit

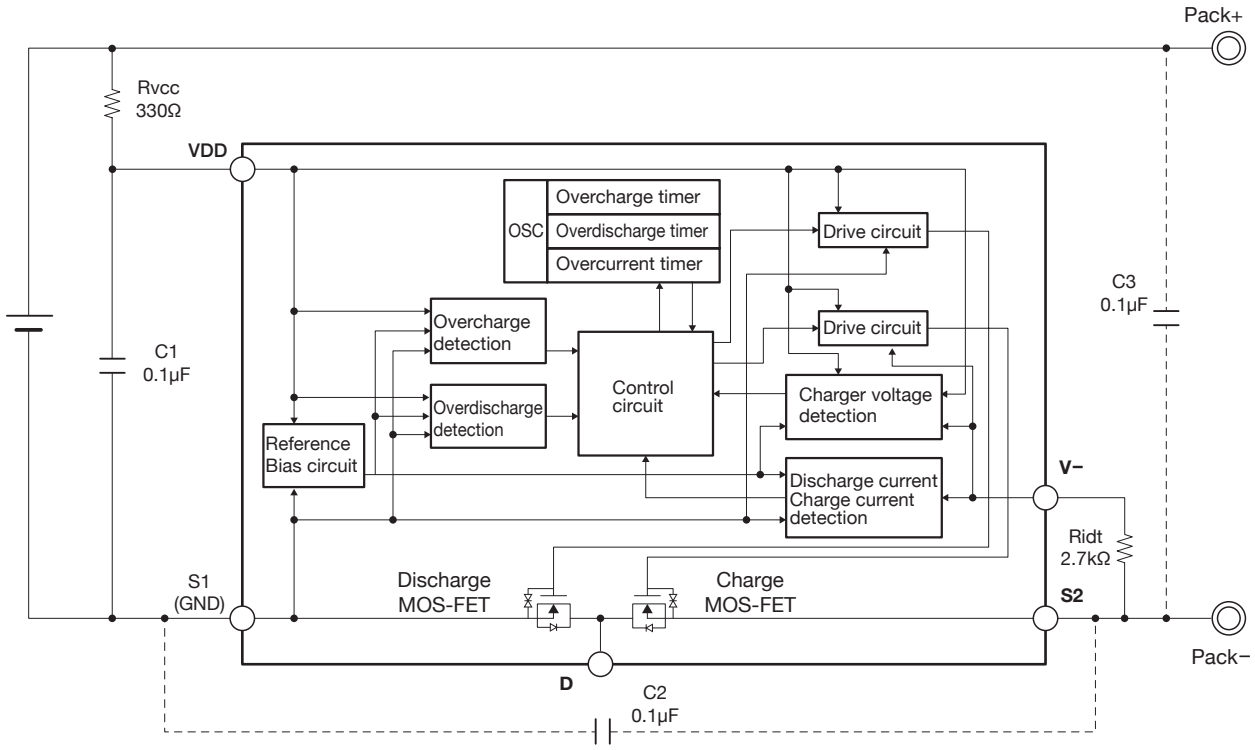

- The resistors that are inserted into each pin are to protect the IC. They help to remove ESD and latch-up damages.
- The capacitors help to reduce the effects of transient variations in voltage and electromagnetic waves, and to improve ESD tolerance of the IC.
  Please use either C2 or C3, or both of them by request of your application.
- These values in the above figure are for example. Please choose appropriate values.

1 cell lithium–ion/lithium–polymer battery protection IC

MC3011 Series

Outline

MC3011 series are protection IC with integrated MOS-FET for protection of the rechargeable lithium-ion or lithium-polymer battery. The overcharge, overdischarge and discharging and charging overcurrent protection of the rechargeable one-cell lithium–ion or lithium–polymer battery can be detected.

Features

(Unless otherwise specified, Ta=25°C)

(1) Range and accuracy of detection/release voltage

- Overcharge detection voltage..... 4.15V to 4.50V, 5mV steps ..... Accuracy±22mV
  Accuracy±27mV (Topr=–5°C to +60°C)
- Overcharge release voltage ..... 4.00V to 4.35V *1..... Accuracy±50mV
- Overdischarge detection voltage ..... 2.00V to 3.00V *2..... Accuracy±100mV
- Overdischarge release voltage..... 2.00V to 3.00V *2..... Accuracy±100mV
- Discharging overcurrent detection voltage ..... Selection from 30mV to 130mV, 1mV ..... Accuracy±6mV
- Charging overcurrent detection voltage * ..... Selection from –130mV to –30mV, 1mV .... Accuracy±9mV
- Short detection voltage..... Selection from 0.36V, 0.56V, 0.90V..... Accuracy±100mV

*1 Hysteresis voltagebetween Overcharge detection and release voltage is selectable from 0.10V/0.15V/0.20V/0.25V.
*2 Please inquire to us about details of the setting of Overdischarge detection and release voltage.

(2) Range of detection delay time

- Overcharge detection delay time ..... Selection from 1.0s, 4.5s, 6.25s
- Overdischarge detection delay time ..... Selection from 100ms, 256ms
- Discharging overcurrent detection delay time ... Selection from 8ms, 12ms, 16ms, 20ms, 34ms
- Charging overcurrent detection delay time..... Selection from 8.5ms, 25ms, 32.5ms
- Short detection delay time..... Selection from 0.50ms, 0.75ms

(3) 0V battery charge function .....Selection from “Permission” or “Prohibition”

(4) The overcharge detection delay timer reset time function (function for the pulse charge) is provided. fixed

(5) Low current consumption

- Normal mode .....Typ. 3.0μA, Max. 5.2μA
- Stand-by mode .....Max. 0.1μA
  (For “Charger connection release” the overdischarge release condition.)
  Max. 0.5μA
  (For “Voltage release” the overdischarge release condition.)

(6) MOS-FET

- Source to Source on state resistance.....Typ. 13.4mΩ (@VDD=3.7V)

(7) Absolute maximum ratings

- VCC pin.....–0.3V to +12V
- V- pin.....VDD-24V to VDD+0.3V
- Drain-source voltage.....Max. 24V
- Drain current .....Max. 9A
- Total Power Dissipation .....Max. 1.0W
- Storage temperature.....–40°C to +125°C
- Operation temperature.....–40°C to +85°C

Pin assignment

PLP-4D

(Top view)

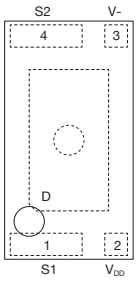

Pin no.	Symbol	Function
1	S1	S1 is a source pin of Discharge MOS-FET and a negative power supply, which is connected to the negative terminal of the battery.
2	VDD	VCC is a positive power supply pin, which is connected to the positive terminal of the battery through Rvcc (330 to 470 ohm).
3	V−	V− is an input pin that detects overcurrent. This pin is connected to the source terminal of Charge MOS-FET through Ridt (2.7 kohm).
4	S2	S2 is a source pin of Charge MOS-FET, which is connected to a negative power supply terminal of chargers.
–	D	D is a common pin of two drains of Charge MOS-FET and Discharge MOS-FET. D must be open electrically.

LINE UP

Product name	Package	Optional function		Detection / Release voltage							Detection delay time					Optional function	
		0V battery charge function	Dicharge overcuttent detection voltage becomes dependent on VDD	Overcharge detection voltage	Overcharge release voltage	Overdischarge detection voltage	Overdischarge release voltage	Discharging overcurrent detection voltage	Charging overcurrent detection voltage	Short detection voltage	Overcharge detection delay time	Overdischarge detection delay time	Discharging overcurrent detection delay time	Charging overcurrent detection delay time	Short detection delay time	Discharge current limit (@VCC=3.5V)	Charge current limit (@VCC=3.5V)
		*1	*2	Vdet1	Vrel1	Vdet2	Vrel2	Vdet3-1	Vdet4	Vshort	tVdet1	tVdet2	tVdet3	tVdet4	tshort	Idischg	Icharge
				V	V	V	V	V	V	V	s	ms	ms	ms	μs	A	A
MC3011CL1GAM	PLP-4D	○	○	4.425	4.225	2.500	2.900	0.064	-0.073	0.36	1.0	100	12.0	8.50	500	4.50	5.40

PLP-4D … 5,000pcs/Reel

*1 0V battery charge function ○ Permission × Prohibition
*2 Optional functions ○ Provide × Not provided

Please inquire to us, if you request a rank other than the above.

Typical application circuit

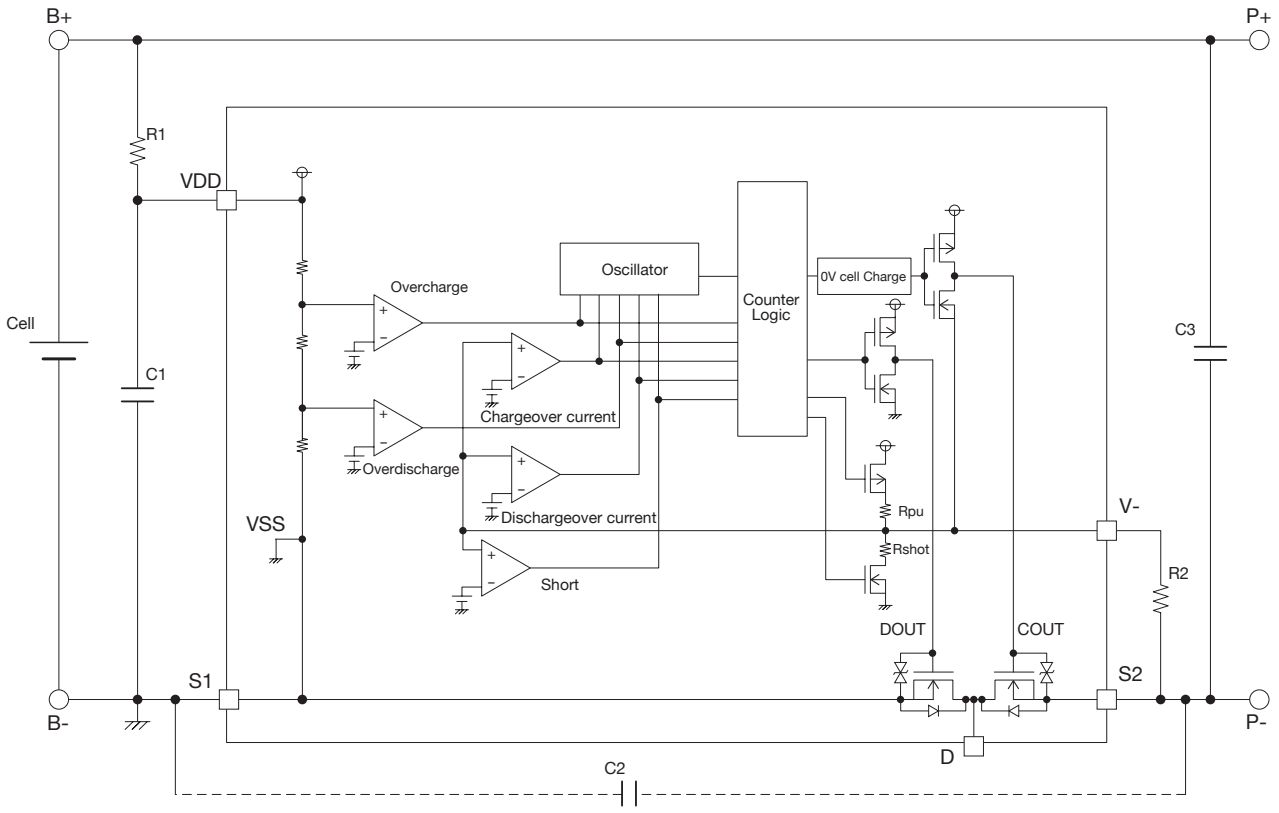

- R1 and C1 stabilize a supply voltage ripple. However, the detection voltage rises by the current of penetration in IC of the voltage detection when R1 is enlarged, and the value of R1 is adjusted to 1KΩ or less. Moreover, adjust the value of C1 to 0.01μF or more to do the stability operation, please.

- R1 and R2 resistors are current limit resistance if a charger is connected reversibly or a high–voltage charger that exceeds the absolute maximum rating is connected. R1 and R2 may cause a power consumption will be over rating of power dissipation, therefore the “R1+R2” should be more than 1KΩ. Moreover, if R2 is too enlarged, the charger connection release cannot be occasionally done after the overdischarge is detected, so adjust the value of R2 to 10KΩ or less, please.

- C2 and C3 capacitors have effect that the system stability about voltage ripple or imported noise. After check characteristics, decide that these capacitors should be inserted or not, where should be inserted, and capacitance value, please.

1 cell lithium-ion/lithium-polymer battery protection IC

MD1421ExxCPAL Series

Outline

MD1421ExxCPAL series are protection IC with integrated MOS-FET for protection of the rechargeable lithium-ion or lithium-polymer battery. The overcharge, overdischarge and discharging and charging overcurrent protection of the rechargeable one-cell lithium-ion or lithium-polymer battery can be detected.

Features

(Unless otherwise specified, Ta=25°C)

(1) Range and accuracy of detection/release voltage

- Overcharge detection voltage.....4.10V to 4.45V, 5mV steps ..... Accuracy±20mV
  Accuracy±25mV (Topr=–5°C to +60°C)
- Overcharge release voltage .....3.90V to 4.30V *1..... Accuracy±50mV
- Overdischarge detection voltage.....2.00V to 3.00V *2..... Accuracy±100mV
- Overdischarge release voltage.....2.00V to 3.20V *2..... Accuracy±100mV
- Discharge overcurrent detection voltage.....40mV to 180mV, 5mV steps ..... Accuracy±5mV
- Charging overcurrent detect voltage .....-180mV to -50mV, 5mV steps ..... Accuracy±15mV
- Short detection voltage.....Selection from 0.56, 0.90V ..... Accuracy±100mV
- Over voltage charger detection voltage.....VDD–8.0V fixed ..... Accuracy±2.0V
- Over voltage charger release voltage .....VDD–7.3V fixed..... Accuracy±1.5V

(2) Range of detection delay time

- Overcharge detection delay time.....Selection from 1.0s, 4.5s, 6.25s
- Overdischarge detection delay time .....Selection from 100ms, 256ms
- Discharging overcurrent detection delay time ...Selection from 8ms, 12ms, 16ms, 20ms, 34ms
- Charging overcurrent detection delay time.....Selection from 8.5ms, 25ms, 32.5ms
- Short detection delay time.....Selection from 0.50ms, 0.75ms, 1.00ms

(3) 0V battery charge function .....Selection from “Permission” or “Prohibition”

(4) The overcharge detection delay timer reset time function (function for the pulse charge) is provided. fixed

(5) Low current consumption

- Normal mode .....Typ. 3.0μA, Max. 5.2μA
- Stand-by mode .....Max. 0.1μA
  (For “Charger connection release” the overdischarge release condition.)
  Max. 0.5μA
  (For “Voltage release” the overdischarge release condition.)

(6) MOS-FET

- Source to Source on state resistance.....Typ. 38.0mΩ (@VCC=3.7V)

(7) Absolute maximum ratings

- VCC pin.....–0.3V to +12V
- V– pin.....VCC–24V to VCC+0.3V
- Drain-source voltage.....Max. 24V
- Drain current .....Max. 6A
- Total Power Dissipation .....Max. 1.0W
- Storage temperature.....–40°C to +125°C
- Operation temperature.....–40°C to +85°C

*1 Hysteresis voltagebetween Overcharge detection and release voltage is selectable from 0.10V/0.15V/0.20V/0.25V.
*2 Please inquire to us about details of the setting of Overdischarge detection and release voltage.

Pin assignment

PLP-4-1228

(Top view)

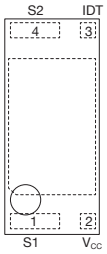

Pin no.	Symbol	Function
1	S1	S1 is a source pin of Discharge MOS-FET and a negative power supply, which is connected to the negative terminal of the battery
2	VCC	VCC is a positive power supply pin, which is connected to the positive terminal of the battery through Rvcc (330 to 470 ohm)
3	IDT	V- is an input pin that detects overcurrent This pin is connected to the source terminal of Charge MOS-FET through Ridt (2.7 kohm)
4	S2	S2 is a source pin of Charge MOS-FET, which is connected to a negative power supply terminal of chargers
-	D	D is a common pin of two drains of Charge MOS-FET and Discharge MOS-FET. D must be open electrically

LINE UP

Product name	Package	Optional function		Detection / Release voltage							Detection delay time					Optional function	
		0V battery charge function	Dicharge overcuttent detection voltage becomes dependent on VDD	Overcharge detection voltage	Overcharge release voltage	Overdischarge detection voltage	Overdischarge release voltage	Discharging overcurrent detection voltage (@VCC=3.5V)	Charging overcurrent detection voltage (@VCC=3.5V)	Short detection voltage	Overcharge detection delay time	Overdischarge detection delay time	Discharging overcurrent detection delay time	Charging overcurrent detection delay time	Short detection delay time	Discharge current limit (@VCC=3.5V)	Charge current limit (@VCC=3.5V)
		*1	*2	V1	V2	V4	V3	V5	V9	V6	Tsp3	Tsp1	Tsp2	Tsp5	Tsp4	Idischg	Icharge
				V	V	V	V	V	V	V	s	ms	ms	ms	μs	A	A
MD1421E28CPAL-R	PLP-4-1228	○	×	4.375	4.175	3.000	3.000	0.040	–0.050	0.900	1.0	100.0	12.0	8.5	500	1.05	1.30
MD1421E34CPAL-R	PLP-4-1228	○	×	4.375	4.175	3.000	3.200	0.040	–0.050	0.900	1.0	100.0	12.0	8.5	500	1.05	1.30
MD1421E35CPAL-R	PLP-4-1228	×(0.65V)	○	4.425	4.225	2.700	2.700	0.070	–0.070	0.560	1.0	100.0	20.0	8.5	750	1.80	1.80
MD1421E36CPAL-R	PLP-4-1228	○	○	4.425	4.225	2.800	2.800	0085	–0.095	0.900	1.0	100.0	20.0	8.5	750	2.20	2.45
MD1421E39CPAL-R	PLP-4-1228	×(0.90V)	×	4.280	-	2.700	2.700	0.080	–0.080	0.900	1.0	100.0	20.0	8.5	750	2.05	2.05

*1 0V battery charge function ○ Permission × Prohibition
*2 Optional functions ○ Provided. × Not provided.

PLP–4–1228 … 5,000pcs/Reel

Please inquire to us, if you request a rank other than the above.

Typical application circuit

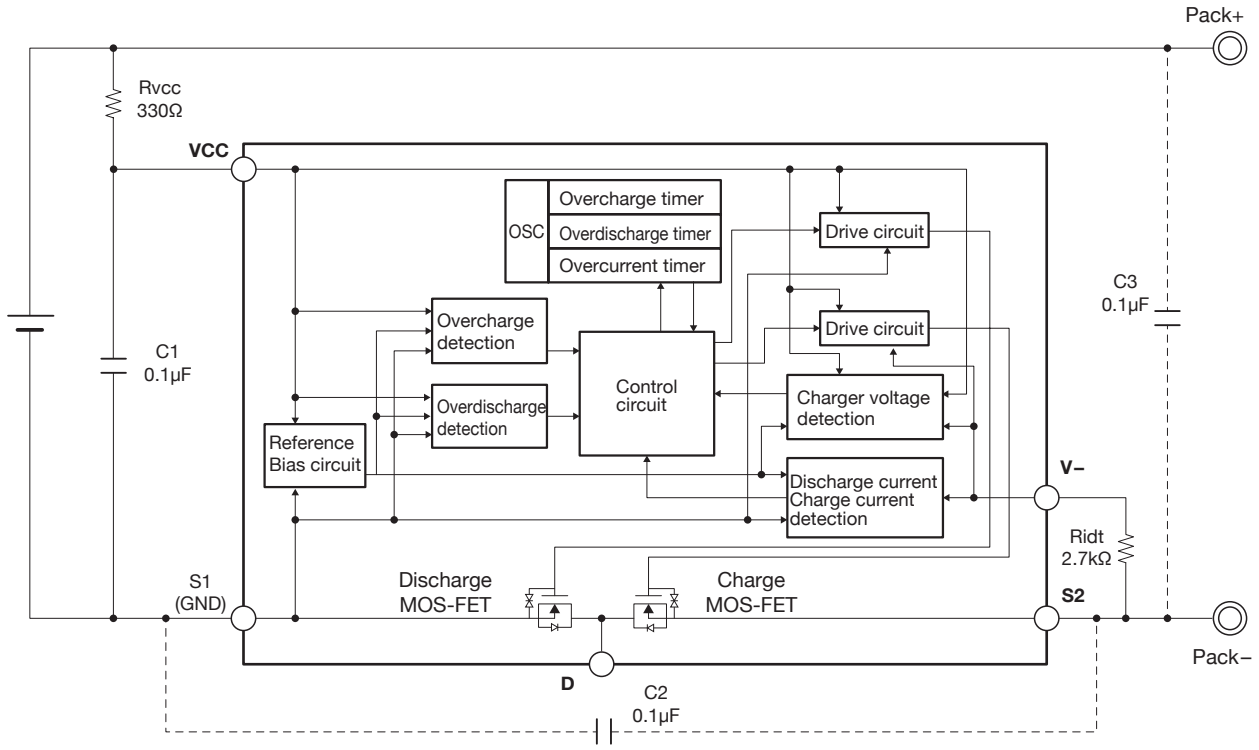

- The resistors that are inserted into each pin are to protect the IC. They help to remove ESD and latch-up damages.
- The capacitors help to reduce the effects of transient variations in voltage and electromagnetic waves, and to improve ESD tolerance of the IC.
  Please use either C2 or C3, or both of them by request of your application.
- These values in the above figure are for example. Please choose appropriate values.

1 cell lithium–ion/lithium–polymer battery protection IC

MC3651 Series

Outline

MC3651 series are protection IC with integrated MOS-FET for protection of the rechargeable Lithium-ion or Lithium-polymer battery.The overcharge, overdischarge and discharging and charging overcurrent protection of the rechargeable one-cell Lithium-ion or Lithium-polymer battery can be detected.

Features

(Unless otherwise specified, Ta=25°C)

(1) Range and accuracy of detection/release voltage

- Overcharge detection voltage..... 4.15V to 4.50V, 5mV step ..... Accuracy±20mV
  Accuracy±25mV
  (Topr=–5°C to +60°C)
- Overcharge release voltage ..... 4.00V to 4.35V *1..... Accuracy±50mV
- Overdischarge detection voltage ..... 2.00V to 3.00V *2..... Accuracy±100mV
- Overdischarge release voltage..... 2.00V to 3.00V *2..... Accuracy±100mV
- Discharging overcurrent detection voltage ..... 20mV to 65mV, 1mV ..... Accuracy±5mV
  (Discharge current limit).....(0.310A to 1.00A)
- Charging overcurrent detection voltage ..... –65mV to –25mV, 1mV ..... Accuracy±5mV
  (Charge current limit) .....(0.385A to 1.00A)
- Short detection voltage..... Selection from 0.19V, 0.36V..... Accuracy±50mV

(2) Range of detection delay time

- Overcharge detection delay time ..... Selection from 1.0s fixed
- Overdischarge detection delay time ..... Selection from 100ms, 256ms
- Discharging overcurrent detection delay time ... Selection from 8ms, 12ms, 16ms, 20ms, 48ms, 224ms
- Charging overcurrent detection delay time..... Selection from 8.5ms, 16.5ms, 32.5ms
- Short detection delay time..... Selection from 0.50ms, 0.75ms

(3) 0V battery charge function .....Selection from “Permission” or “Prohibition” *3

(4) Low current consumption

- Normal mode .....Typ. 3.0μA, Max. 4.5μA
- Stand-by mode .....Max. 0.1μA (In case Overdischarge latch function “Enable”)
  Max. 0.5μA (In case Overdischarge latch function “Disable”)

(6) MOS-FET

- Source to Source on state resistance.....Typ. 65.0mΩ (@VDD=3.5V)

(7) Absolute maximum ratings

- VCC pin.....–0.3V to +12V
- V- pin.....VDD–24V to VDD+0.3V
- Drain-source voltage.....Max. 24V
- Drain current .....Max. 1.2A
- Total Power Dissipation .....Max. 0.4W
- Storage temperature.....–40°C to +125°C
- Operation temperature.....–40°C to +85°C

*1 Hysteresis voltagebetween Overcharge detection and release voltage is selectable from 0.10V/0.15V/0.20V/0.25V.
*2 Please inquire to us about details of the setting of Overdischarge detection and release voltage.
*3 In the case of "0V battery charge inhibition", the setting voltage is selectable from 0.65V/0.90V.
*4 Please inquire to us, if you need another specifications.

Pin assignment

PLP-4E

(Top view)

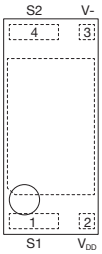

Pin no.	Symbol	Function
1	S1	Negative power supply and source of discharge MOS-FET terminal. Connect to the negative terminal of the battery.
2	VDD	Positive power supply voltage input terminal. Connect to the positive terminal of the battery through R1.
3	V−	Charger negative voltage input terminal. Connect to S2 terminal through R2.
4	S2	Source terminal of charge MOS-FET. Connect to a negative power supply terminal of charger.
−	D	Drain terminal of discharge and charge MOS-FET. Drain terminal must be open electrically.

LINE UP

Product name	Package	Optional function			Detection / Release voltage							Detection delay time					Optional function		MOS -FET
		0V battery charge function	Overcharge detection Latch function	Overdischarge detection Latch function	Overcharge detection voltage	Overcharge release voltage	Overdischarge detection voltage	Overdischarge release voltage	Discharging overcurrent detection voltage (@VDD=3.5V)	Charging overcurrent detection voltage (@VDD=3.5V)	Short detection voltage	Overcharge detection delay time	Overdischarge detection delay time	Discharging overcurrent detection delay time	Charging overcurrent detection delay time	Short detection delay time	Discharge current limit (@VCC=3.5V)	Charge current limit (@VCC=3.5V)	Source to source on-state resistance (@VCC=3.5V)
			*1	*1	Vdet1	Vrel1	Vdet2	Vrel2	Vdet3	Vdet4	Vshort	tVdet1	tVdet2	tVdet3	tVdet4	tshort	Idischg	Icharge	Rss(on)
					V	V	V	V	mV	mV	V	s	ms	ms	ms	μs	A	A	mΩ
MC3651DF1AAM	PLP-4E	0.65V	×	○	4.280	4.180	2.700	2.700	20.0	-25.0	0.190	1.0	100.0	20.0	8.5	750	0.315	0.390	65.0
MC3651DF3AAM	PLP-4E	0.90V	×	○	4.265	4.065	3.000	3.000	20.0	-25.0	0.190	1.0	100.0	20.0	8.5	500	0.315	0.390	65.0

*1 Optional functions ○ Provided. × Not provided.

PLP-4E ... 5,000pcs/Reel

Please inquire to us, if you request a rank other than the above.

Typical application circuit

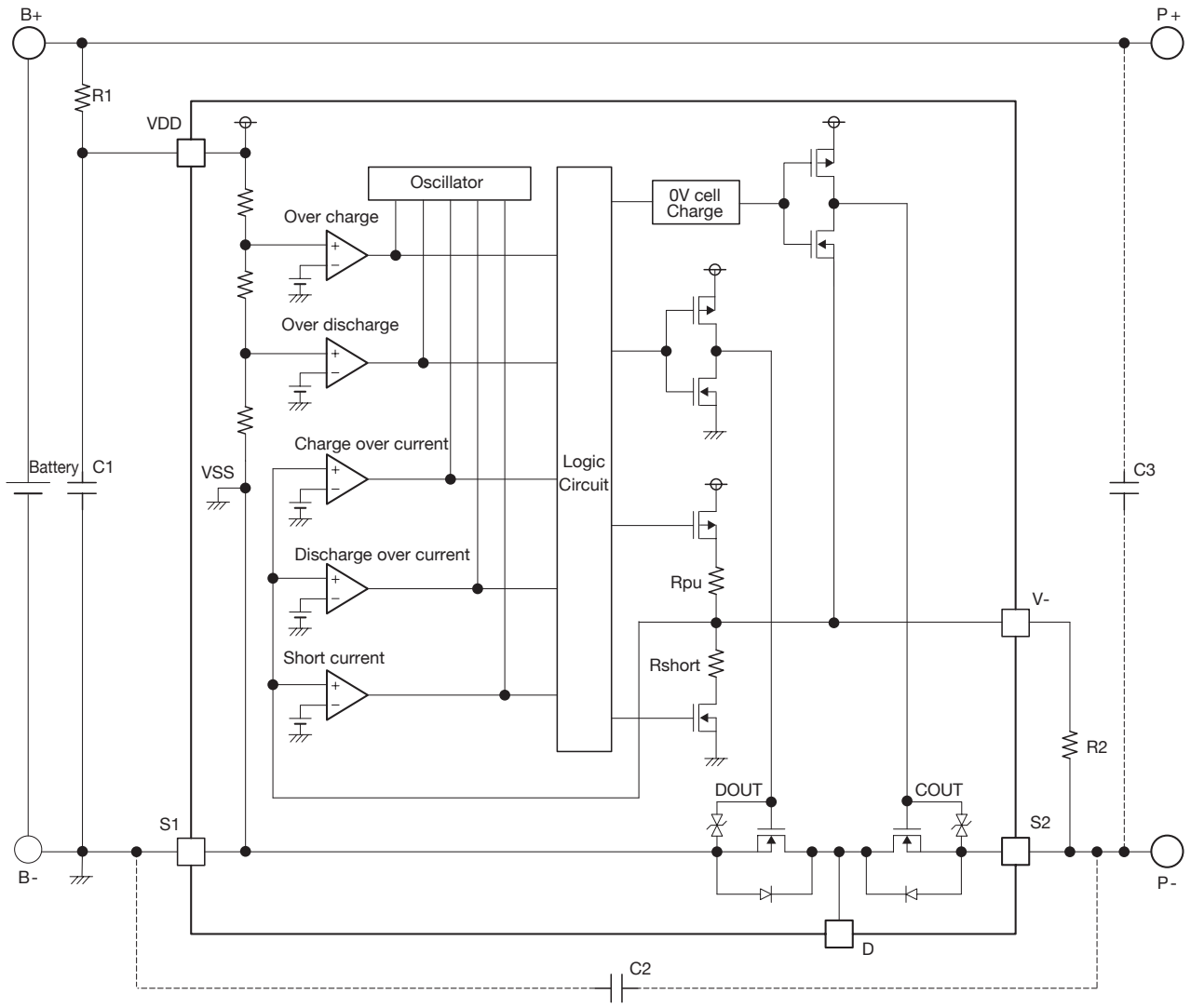

Symbol	Parts	Min.	Typ.	Max.	Purpose
R1	Resistor	-	330Ω	470Ω	For voltage fluctuation, For ESD
C1	Capacitor	-	0.1μF	-	For voltage fluctuation
R2	Resistor	-	2.7kΩ	-	Current limit for charger reverse connection
C2	Capacitor	-	0.1μF	-	For exogenous noise
C3	Capacitor	-	0.1μF	-	For exogenous noise

1 cell lithium–ion/lithium–polymer battery protection IC

MC3761 Series

Outline

MC3761 series are protection IC with integrated MOS-FET for protection of the rechargeable Lithium-ion or Lithium-polymer battery. The overcharge, overdischarge and discharging and charging overcurrent protection of the rechargeable one-cell Lithium-ion or Lithium-polymer battery can be detected.

Features

(Unless otherwise specified, Ta=25°C)

(1) Range and accuracy of detection/release voltage

- Overcharge detection voltage.....4.20V to 4.70V, 5mV step ..... Accuracy ±20mV
  Accuracy -50/+25mV(Ta=-40 to +85°C)
- Overcharge release voltage .....Vdet1-0.4V to Vdet1,100mV step..... Accuracy -30/+20mV (Vdet1=Vrel1)
  Accuracy ±30mV (Vdet1≠Vrel1)
- Overdischarge detection voltage .....2.00V to 3.30V, 50mV step ..... Accuracy ±30mV
- Overdischarge release voltage.....Vdet2+0.4V to Vdet2,100mV step..... Accuracy -30/+40mV (Vdet2=Vrel2)
  Accuracy ±90mV (Vdet2≠Vrel2)
- Discharging overcurrent detection voltage .....+8mV to +110mV, 1mV step..... Accuracy *1
  (Discharging overcurrent detection current).....(0.140A to 1.95A)
- Discharging overcurrent release voltage.....Selection from
  VDD-0.7V, Vdet3, 1.4V
- Charging overcurrent detection voltage.....-100mV to -8mV, 1mV step ..... Accuracy *1
  (Charging overcurrent detection current) .....(-0.140A to -1.75A)
- Short detection voltage.....0.040V to 0.700V, 5mV step ..... Accuracy ±20 to 50mV

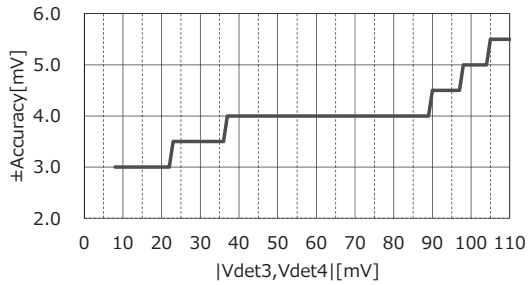

※1
These range and accuracy are the one of the standard setting.
It may differ each product.
Please refer to an individual specifications
about detail parameters.

(2) Range of detection delay time

- Overcharge detection delay time .....1.0s fixed
- Overdischarge detection delay time .....Selection from 20ms, 96ms, 144ms
- Discharging overcurrent detection delay time .....Selection from 6ms, 8ms, 12ms, 16ms, 20ms, 32ms,
  128ms, 256ms, 512ms
- Charging overcurrent detection delay time.....Selection from 8ms, 16ms, 32ms
- Short detection delay time.....150us to 550us, 50us step

(3) 0V battery charge function ..... Selection from "Inhibition" or "Permission"*2

(4) Low current consumption

- Normal mode .....Typ. 1.0μA, Max. 1.4μA
- Standby mode .....Max. 0.025μA (In case Overdischarge latch function "Enable")
  Max. 0.550μA (In case Overdischarge latch function "Disable")

(5) MOS-FET

- Source to Source on state resistance.....Typ. 56.5mΩ (@VDD=3.5V)

(6) Absolute maximum ratings

- VDD pin.....-0.3V to +12V
- V- pin.....VDD-24V to VDD+0.3V
- Drain-source voltage.....Max. 24V
- Source current 2.0A
- Total Power Dssipation 0.3W
- Storage temperature.....-55 to +125°C
- Operation temperature.....-40 to +85°C

※2 In the case of "0V battery charge inhibition", the setting voltage is 0.90V.
※3 Please inquire to us, if you need another specifications.

Pin assignment

PLP-6J

(Top view)

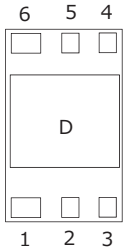

Pin no.	Symbol	Function
1	S1	Source terminal of discharge FET
2	VSS	Negative power supply voltage input terminal
3	VDD	Positive power supply voltage input terminal
4	NC	No connection
5	VM	Charger negative voltage input terminal
6	S2	Source tarminal of charge FET
-	D	Drain terminal of discharge FET and charge FET

LINE UP

Product name	Package	Model Code.	Optional function			Detection / Release voltage							Detection delay time					Overcurrent		MOS -FET
			0V battery charge function	Overcharge detection Latch function	Overdischarge detection Latch function	Overcharge detection voltage	Overcharge release voltage	Overcharge release voltage	Overdischarge release voltage	Discharging overcurrent detection voltage (@VDD=3.5V)	Charging overcurrent detection voltage (@VDD=3.5V)	Short detection voltage	Overcharge detection delay time	Overdischarge detection delay time	Discharging overcurrent detection delay time	Charging overcurrent detection delay time	Short detection delay time	Discharge current limit (@VDD=3.5V)	Charge current limit (@VDD=3.5V)	Source to source on-state resistance (@VDD=3.5V)
				*1	*1	Vdet1	Vrel1	Vdet2	Vrel2	Vdet3	Vdet4	Vshort	tVdet1	tVdet2	tVdet3	tVdet4	tshort	Idischg	Icharge	Rss(on)
						V	V	V	V	mV	mV	V	s	ms	ms	ms	μs	A	A	mΩ
MC3761PK1HAU	PLP-6J	761PK1U	Inhibition	×	○	4.280	4.180	2.700	2.700	30.0	-30.0	0.060	1.0	96.0	20.0	8.0	300	0.530	0.535	56.5
MC3761AJ2HAU	PLP-6J	761AJ2U	Permission	×	×	4.455	4.255	2.800	3.200	110.0	-100.0	0.270	1.0	96.0	12.0	8.0	300	1.945	1.785	56.5
MC3761AJ3HAU	PLP-6J	761AJ3U	Permission	×	×	4.225	4.025	2.800	3.200	37.0	-36.0	0.080	1.0	96.0	12.0	8.0	300	0.655	0.645	56.5

*1 Optional functions ○ Enable × Disable

Please inquire to us, if you request a rank other than the above.

Typical application circuit

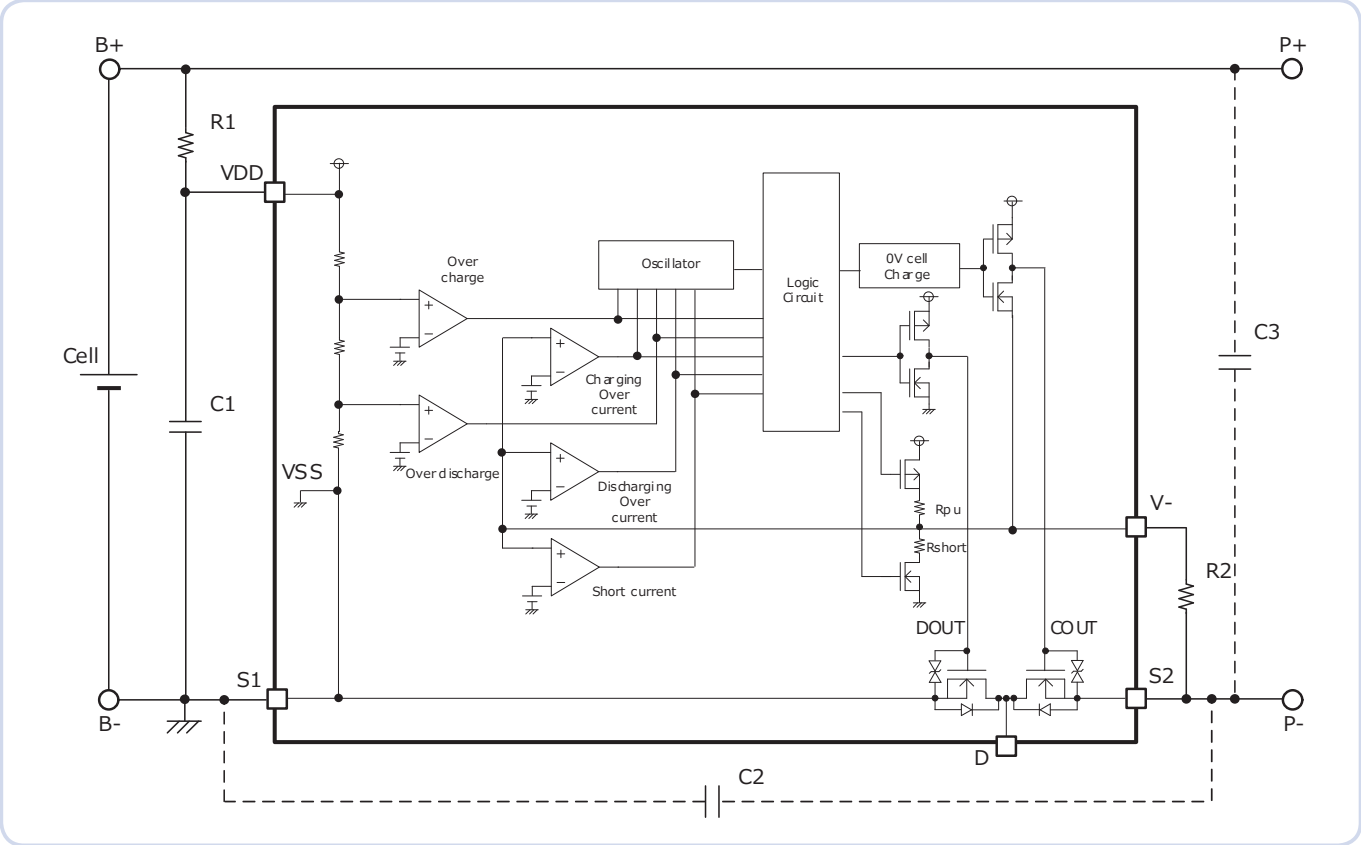

Symbol	Part	Min.	Typ.	Max.	Purpose
R1	Resistor	-	100Ω	1.0kΩ	For voltage fluctuation, For ESD
C1	Capacitor	0.01uF	0.1uF	1.0uF	For voltage fluctuation
R2	Resistor	-	1.0kΩ	-	Current limit for charger reverse connection
C2	Capacitor	-	0.1uF	-	For exogenous noise
C3	Capacitor	-	0.1uF	-	For exogenous noise

Application hints
The resistors that are inserted into each pin are to protect the IC. They help to remove ESD and latch-up damages. The capacitors help to reduce the effects of transient variations in voltage and electromagnetic waves,and to improve ESD tolerance of the IC.
Please use either C2 or C3, or both of them by request of your application.
These values in the above figure are for example. Please choose appropriate values.

1 cell lithium–ion/lithium–polymer battery protection IC

MJ3401 Series

Outline

MJ3401 series are protection IC with integrated MOS-FET for protection of the rechargeable Lithium-ion or Lithium-polymer battery. The overcharge, overdischarge and discharging and charging overcurrent protection of the rechargeable one-cell Lithium-ion or Lithium-polymer battery can be detected.
It's possible by OTP technology to detect unusual state of a Li-ion battery with very high accuracy.

Features

(Unless otherwise specified, Ta=25°C)

(1) Range and accuracy of detection/release voltage

- Overcharge detection voltage..... 4.15V to 4.50V, 5mV step ..... Accuracy±10mV
  Accuracy-20mV to +15mV
  (Topr=–5°C to +60°C)
- Overcharge release hysteresis voltage ..... Selection from 0V, 0.1V, 0.2V
- Overdischarge detection voltage ..... 2.00V to 3.00V, 100mV step ..... Accuracy±35mV
- Overdischarge release hysteresis voltage..... Selection from 0V, 0.2V, 0.3V, 0.4V
- Discharging overcurrent detection current ..... 4.0A to 8.0A, 0.1A step *1
- Charging overcurrent detection current..... 4.0A to 8.0A, 0.1A step *1
- Short detection voltage..... 180mV to 360mV, 10mV step ..... Accuracy±15mV

(2) Range of detection delay time

- Overcharge detection delay time..... Selection from 1.024s, 4.60s
- Overdischarge detection delay time ..... Selection from 20ms, 96ms, 144ms
- Discharging overcurrent detection delay time ... Selection from 6ms, 8ms, 12ms, 16ms, 20ms, 32ms, 128ms, 256ms
- Charging overcurrent detection delay time..... Selection from 8ms, 16ms, 32ms
- Short detection delay time..... Selection from 500μs, 820μs

(3) 0V battery charge function .....Selection from “Permission” or “Prohibition” *2

(4) Low current consumption

- Normal mode .....Typ. 4.5μA, Max. 7.0μA
- Stand-by mode .....Max. 0.1μA (In case Overdischarge latch function “Enable”)
  Max. 0.3μA (In case Overdischarge latch function “Disable”)

(5) MOS-FET

- Source to Source on state resistance.....Typ. 11.0mΩ (@VDD=3.6V)

(6) Absolute maximum ratings

- VCC pin.....–0.3V to +10V
- V- pin.....VDD–24V to VDD+0.3V
- VPP pin .....VDD–0.3V to VDD+0.3V
- Drain-source voltage.....Max. 24V
- Drain current .....Max. 1.2A
- Total Power Dissipation .....Max. 1.0W
- Storage temperature.....–55°C to +125°C
- Operation temperature.....–40°C to +85°C

*1 Please inquire to us about details of the accuracy of Overcurrent detection current, which is varies depending on the setting value.
*2 In the case of "0V battery charge inhibition", the setting voltage is selectable from 0.90V/1.25V.
*3 Please inquire to us, if you need another specifications.

Pin assignment

PLP-6G

(Top view)

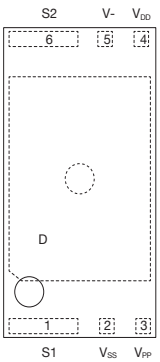

Pin no.	Symbol	Function
1	S1	Source terminal of discharge MOS-FET.Connect to the negative terminal of the battery.
2	VDD	Negative power supply voltage input terminal. Connect to the negative terminal of the battery.
3	VPP	Test terminal. VPP terminal must be connected to VSS terminal .
4	VDD	Positive power supply voltage input terminal. Connect to the positive terminal of the battery through R1.
5	V-	Charger negative voltage input terminal. Connect to the S2 terminal through R2.
6	S2	Source terminal of charge MOS-FET. Connect to a negative power supply terminal of charger.
-	D	Drain terminal of discharge and charge MOS-FET. Drain terminal must be open electrically.

LINE UP

Product name	Package	Optional function			Detection / Release voltage							Detection delay time					Optional function		MOS -FET
		0V battery charge function	Overcharge detection Latch function	Overdischarge detection Latch function	Overcharge detection voltage	Overcharge release voltage	Overdischarge detection voltage	Overdischarge release voltage	Discharging overcurrent detection voltage (@VDD=3.6V)	Charging overcurrent detection voltage (@VDD=3.6V)	Short detection voltage	Overcharge detection delay time	Overdischarge detection delay time	Discharging overcurrent detection delay time	Charging overcurrent detection delay time	Short detection delay time	Discharge current limit (@VCC=3.6V)	Charge current limit (@VCC=3.6V)	Source to source on-state resistance (@VCC=3.6V)
			*1	*1	Vdet1	Vrel1	Vdet2	Vrel2	Vdet3	Vdet4	Vshort	tVdet1	tVdet2	tVdet3	tVdet4	tshort	Idsc36	Ichg36	Rss(on)
					V	V	V	V	mV	mV	V	s	ms	ms	ms	μs	A	A	mΩ
MJ3401A01DAM	PLP-6G	Permission	×	×	4.425	4.220	2.500	2.925	*2	*3	0.360	1.024	96.0	12.0	8.0	500	6.00	6.60	11.0
MJ3401A07DAM	PLP-6G	Permission	×	×	4.425	4.220	2.500	2.925	*2	*3	0.180	1.024	96.0	12.0	8.0	500	8.00	6.00	11.0
MJ3401A08DAM	PLP-6G	Permission	×	×	4.475	4.265	2.300	2.690	*2	*3	0.360	1.024	96.0	20.0	32.0	500	9.20	6.90	11.0
MJ3401C01DAM	PLP-6G	0.90V	○	○	4.425	4.425	2.800	2.800	*2	*3	0.180	1.024	144.0	16.0	8.0	500	7.50	6.00	11.0
MJ3401C02DAM	PLP-6G	0.90V	○	○	4.435	4.435	2.800	2.800	*2	*3	0.180	1.024	144.0	16.0	8.0	500	7.50	6.00	11.0

*1 Optional functions ○ Provided. × Not provided.
*2 Discharging overcurrent detection voltage (Vdet3) = Idch36 * Rss(on)36
*3 Charging overcurrent detection voltage (Vdet4) = Ichg36 * Rss(on)36

PLP-6G ... 5,000pcs/Reel
Please inquire to us, if you request a rank other than the above.

Typical application circuit

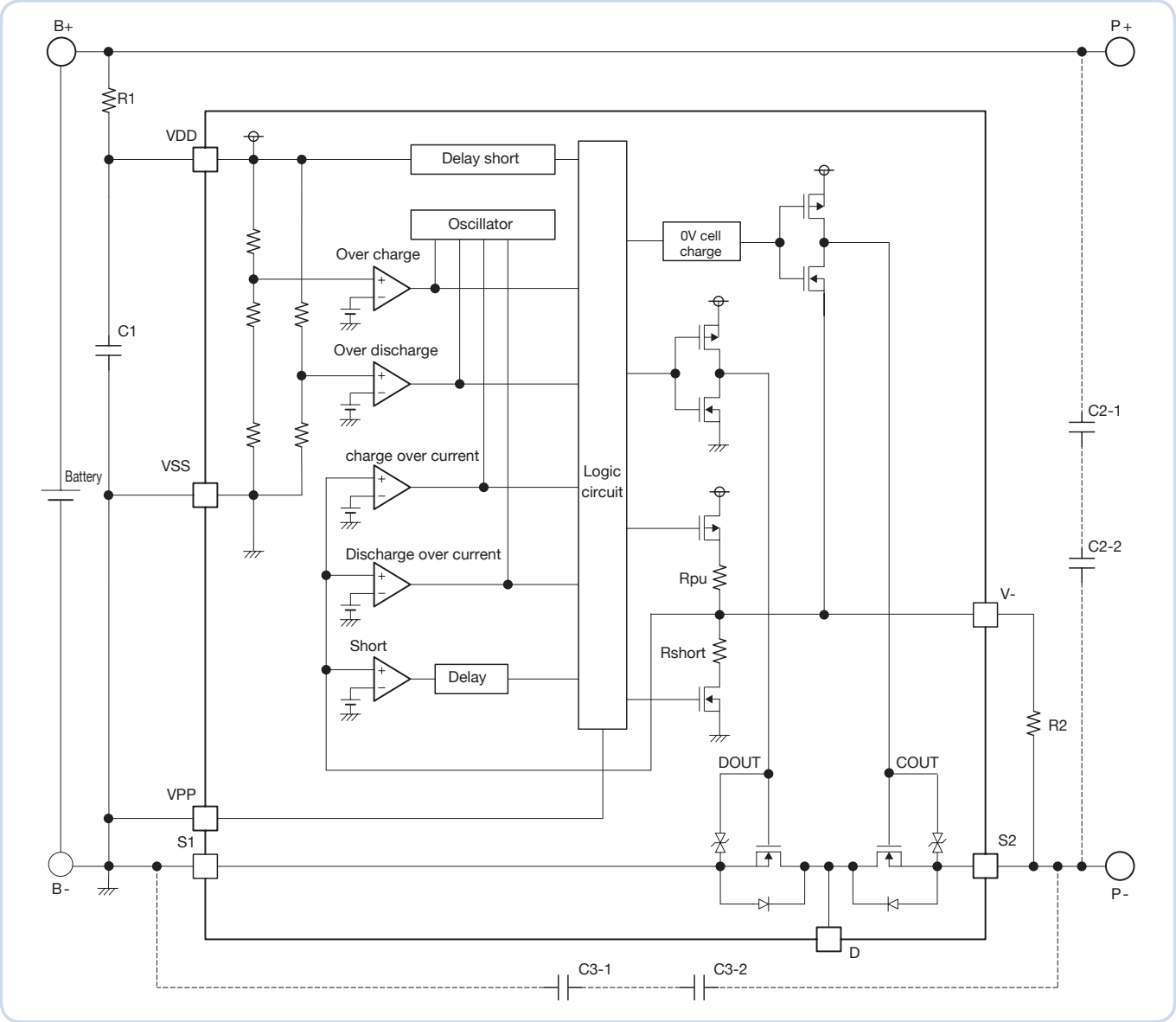

Symbol	Parts	Min.	Typ.	Max.	Purpose
R1	Resistor	-	330Ω	-	For voltage fluctuation, For ESD
C1	Capacitor	0.01μF	0.1μF	1.0μF	For voltage fluctuation
R2	Resistor	-	1.0kΩ	10kΩ	Current limit for charger reverse connection
C2	Capacitor	-	0.1μF	-	For exogenous noise
C3	Capacitor	-	0.1μF	-	For exogenous noise

1 cell lithium–ion/lithium–polymer battery protection IC

MJ3542 Series

Outline

MJ3542 series are protection IC with integrated MOS-FET for protection of the rechargeable Lithium-ion or Lithium-polymer battery. The overcharge, overdischarge and discharging and charging overcurrent protection of the rechargeable one-cell Lithium-ion or Lithium-polymer battery can be detected.

Features

(Unless otherwise specified, Ta=25°C)

(1) Range and accuracy of detection/release voltage

- Overcharge detection voltage.....4.10V to 4.60V, 5mV step ±10mV (Ta=25°C)
  -40mV/+17mV (Ta=-40~+85°C)
- Overcharge release voltage .....Vdet1 - CHYS *1 -
- Overdischarge detection voltage .....2.00V to 2.80V, 100mV step ±35mV
- Overdischarge release voltage.....Vdet2 + DHYS *2 -
- Discharge current limit .....3.0A to 12.0A, 0.1A step *3
- Charge overcurrent limit.....0A to 12.0A, 0.1A step *3
- Short detection voltage.....90mV to 180mV, 5mV step ±10mV

*1 "CHYS" is selectable from "None(0V)","CHYS1","CHYS2"
"CHYS1", "CHYS2" depend on setting value of Vdet1

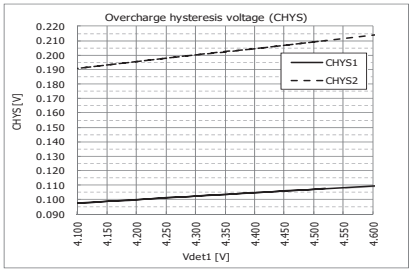

*2 "DHYS" is selectable from "None(0V)","DHYS1","DHYS2","DHYS3"
"DHYS1", "DHYS2", "DHYS3" depend on setting value of Vdet2

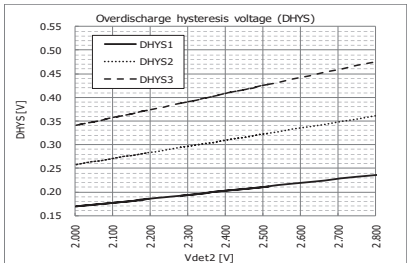

*3 Please inquire to us about details of the accuracy of Overcurrent detection current,which is varies depending on the setting value.

(2) Range of detection/release delay time

- Overcharge detection delay time.....Selection from 1.024s, 4.6s
- Overcharge release delay time.....Selection from 8ms, 16ms
- Overdischarge detection delay time .....Selection from 20ms, 96ms, 144ms
- Discharging overcurrent detection delay time ...Selection from 6ms, 8ms, 12ms, 16ms, 20ms, 32ms, 128ms, 256ms
- Charging overcurrent detection delay time.....4Selection from 8ms, 16ms, 32ms
- Short detection delay time.....300us to 600us, 50us step

(3)0V battery charge function .....Selection from "Inhibition" or "Permission"
In the case of "Inhibition", the setting voltage is 0.90V or 1.25V.

(4) Current consumption

- Normal mode .....Typ. 4.5μA, Max. 7.0μA
- Stand-by mode .....Max. 0.1μA (In case Overdischarge latch function "Enable")
  Max. 0.3μA (In case Overdischarge latch function "Disable")

(5) MOS-FET

- Source to Source on state resistance.....Typ. 4.7mΩ (@VDD=3.5V)

(6) Absolute maximum ratings

- Supply voltage .....-0.3V to +8.0V
- V- terminal voltage .....VDD-15V to VDD+0.3V
- Test terminal voltage .....VSS-0.3V to VDD+0.3V
- Source to source voltage.....Max. 15.0V
- Source current .....Max. 12.0A
- Total power dissipation .....Max. 1.0W

*4 These range and accuracy are the one of the standard setting.It may differ each product.
Please refer to an individual specifications about detail parameters.
*5 Please inquire to us, if you need another specifications.

Pin assignment

SSON-6N

(Top view)

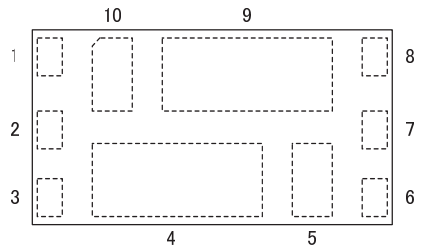

Pin no.	Symbol	Function
1	DOUT	Discharge MOS-FET control terminal (Connected to G1)
2	VSS	Negative power supply voltage input terminal
3	VPP	Test terminal (Connected to VSS)
4	S2	Source terminal of charge MOS-FET
5	G2	Gate terminal of charge MOS-FET (Connected to COUT)
6	COUT	Charge MOS-FET control terminal (Connected to G2)
7	V-	Charger negative voltage input terminal
8	VDD	Positive power supply voltage input terminal
9	S1	Source terminal of discharge MOS-FET
10	G1	Gate terminal of discharge MOS-FET (Connected to DOUT)

LINE UP

Product name	Package	Optional function			Detection / Release voltage							Detection delay time					Overcurrent		MOS -FET
		0V battery charge function	Overcharge detection Latch function	Overdischarge detection Latch function	Overcharge detection voltage	Overcharge release voltage	Overcharge release voltage	Overdischarge release voltage	Discharging overcurrent detection voltage (@VDD=3.5V)	Charging overcurrent detection voltage (@VDD=3.5V)	Short detection voltage	Overcharge detection delay time	Overdischarge detection delay time	Discharging overcurrent detection delay time	Charging overcurrent detection delay time	Short detection delay time	Discharge current limit (@VDD=3.5V)	Charge current limit (@VDD=3.5V)	Source to source on-state resistance (@VDD=3.5V)
			*1	*1	Vdet1	Vrel1	Vdet2	Vrel2	Vdet3	Vdet4	Vshort	tVdet1	tVdet2	tVdet3	tVdet4	tshort	Idch	Ichg	Rss(on)
					V	V	V	V	mV	mV	mV	s	ms	ms	ms	μs	A	A	mΩ
MJ3542CM1EBU	SSON-6N	Permission	×	×	4.425	4.220	2.500	2.925	*1	*2	90	1.0	96.0	12.0	8.0	270	6.10	6.10	4.7
MJ3542CM2EBU	SSON-6N	Permission	×	×	4.475	4.265	2.300	2.690	*1	*2	120	1.0	96.0	20.0	32.0	460	6.80	6.80	4.7
MJ3542CM5EBU	SSON-6N	Permission	×	×	4.450	4.245	2.000	2.340	*1	*2	90	1.0	96.0	12.0	8.0	350	6.10	6.10	4.7
MJ3542CM6EBU	SSON-6N	Permission	×	×	4.425	4.220	2.500	2.925	*1	*2	90	1.0	96.0	12.0	8.0	500	9.10	6.45	4.7
MJ3542CM7EBU	SSON-6N	Permission	×	×	4.475	4.265	2.300	2.690	*1	*2	150	1.0	96.0	20.0	32.0	500	10.00	7.30	4.7
MJ3542KM2EBU	SSON-6N	Permission	○	×	4.475	4.475	2.300	2.690	*1	*2	120	1.0	96.0	20.0	32.0	460	6.80	6.80	4.7
MJ3542KT1EBU	SSON-6N	Inhibition	○	×	4.475	4.475	2.300	2.690	*1	*2	120	1.0	96.0	32.0	32.0	460	6.80	6.80	4.7
MJ3542LM1EBU	SSON-6N	Permission	○	○	4.435	4.435	2.300	2.300	*1	*2	90	1.0	144.0	16.0	8.0	460	8.10	6.40	4.7
MJ3542LT1EBU	SSON-6N	Inhibition	○	○	4.435	4.435	2.300	2.300	*1	*2	90	1.0	144.0	16.0	8.0	460	8.10	6.40	4.7
MJ3542LT2EBU	SSON-6N	Inhibition	○	○	4.435	4.435	2.300	2.300	*1	*2	90	1.0	144.0	16.0	8.0	460	7.60	6.40	4.7

*1 Optional functions ○ Enable × Disable
*2 Discharging overcurrent detection voltage (Vdet3) = Idch36 * Rss(on)36
*3 Charging overcurrent detection voltage (Vdet4) = - Ichg36 * Rss(on)36

Please inquire to us, if you request a rank other than the above.

Typical application circuit

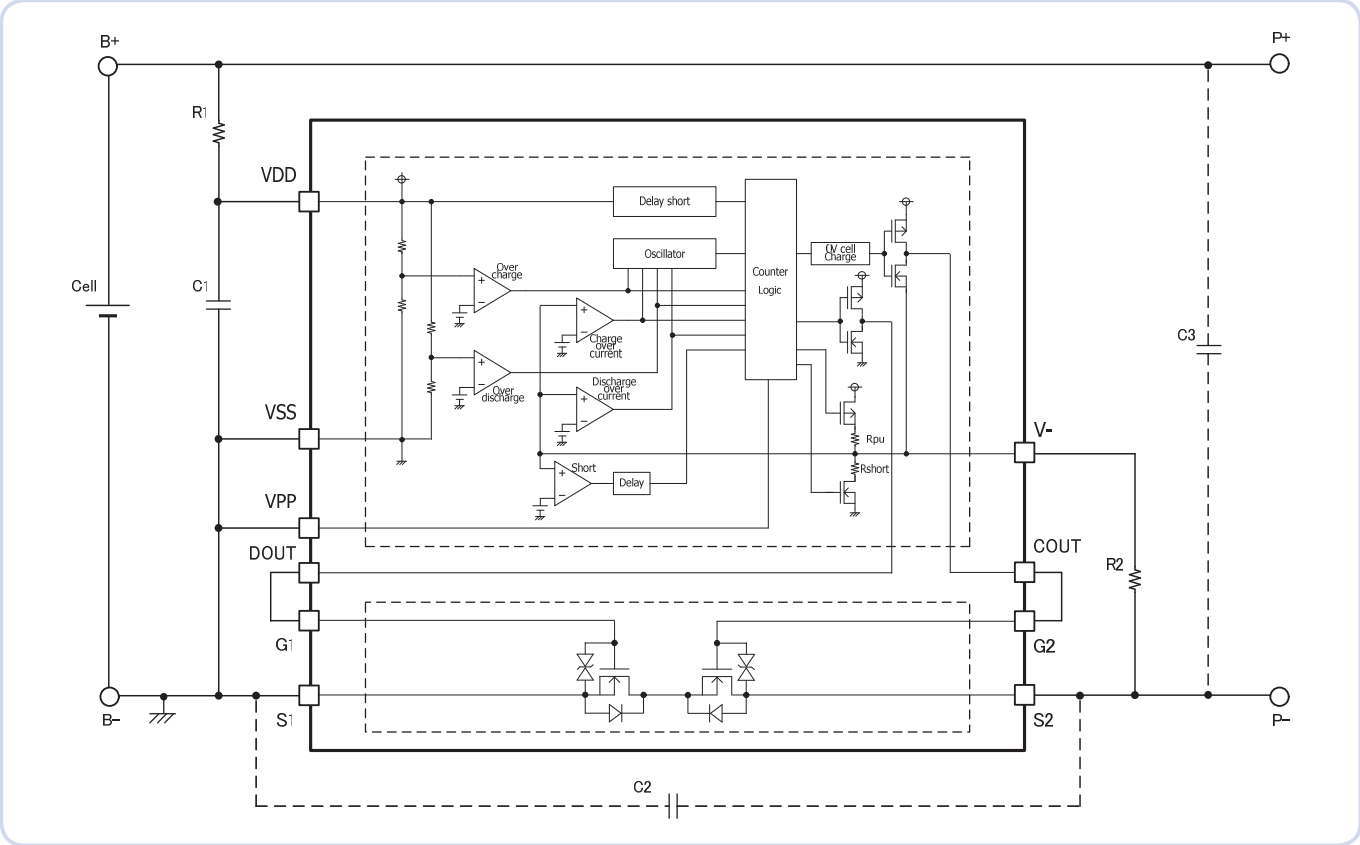

Symbol	Part	Min.	Typ.	Max.	Purpose
R1	Resistor	-	330Ω	-	For voltage fluctuation, For ESD
C1	Capacitor	0.01uF	0.1uF	1.0uF	For voltage fluctuation
R2	Resistor	-	1.0kΩ	10kΩ	Current limit for charger reverse connection
C2	Capacitor	-	0.1uF	-	For exogenous noise
C3	Capacitor	-	0.1uF	-	For exogenous noise

Application hints
The resistors that are inserted into each pin are to protect the IC. They help to remove ESD and latch-up damages. The capacitors help to reduce the effects of transient variations in voltage and electromagnetic waves,and to improve ESD tolerance of the IC.
Please use either C2 or C3, or both of them by request of your application.
These values in the above figure are for example. Please choose appropriate values.

2 cells lithium–ion/lithium–polymer battery protection IC

MM3220 Series

Outline

MM3220 series are protection IC using high voltage CMOS process for overcharge, overdischarge and overcurrent protection of the rechargeable lithium–ion or lithium–polymer battery.
The overcharge, overdischarge and discharging overcurrent protection of the rechargeable two-cell lithium-ion or lithium-polymer battery can be detected.
In addition, the IC has a built–in timer circuit (for each detection delay time), so that the protection circuitry can be comprised with fewer external components.

Features

(Unless otherwise specified, Ta=25°C)

(1) Range and accuracy of detection/release voltage

- Overcharge detection voltage.....4.0V to 4.5V, 5mV steps ..... Accuracy±20mV
  Accuracy±25mV (Topr=–5°C to +60°C)
- Overcharge release voltage .....3.9V to 4.5V, 50mV steps ..... Accuracy±30mV
- Overdischarge detection voltage.....2.0V to 3.0V, 50mV steps ..... Accuracy±35mV
- Overdischarge release voltage.....2.0V to 3.5V, 50mV steps ..... Accuracy±100mV
- Discharging overcurrent detection voltage 1 .....50mV to 300mV, 5mV steps ..... Accuracy±10mV
- Discharging overcurrent detection voltage 2 .....*50mV to 700mV, 50mV steps..... Accuracy typ±20%
- Charging overcurrent detection voltage *1 .....–300mV to –50mV, 5mV steps..... Accuracy±20mV
- Short detection voltage.....0.9V standard ..... Accuracy±100mV
  Accuracy±300mV *2

(2) Range of detection delay time

- Overcharge detection delay time.....Selection from 0.25s, 1.0s, 1.2s, 4.5s
- Overdischarge detection delay time .....Selection from 12ms, 20ms, 24ms, 96ms, 125ms, 144ms
- Discharging overcurrent detection delay time 1 .....Selection from 6ms, 9ms, 10.8ms, 20ms, 48ms, 256ms
- Discharging overcurrent detection delay time 2 .....Selection from 0.5ms, 2.5ms, 4ms
- Charging overcurrent detection delay time.....Selection from 4ms, 6ms, 8ms, 16ms
- Short detection delay time.....300μs, 400μs standard

(3) Low current consumption

- Normal mode .....Typ. 4.0μA, Max. 8.0μA
- Stand-by mode .....Max. 0.1μA

(4) Absolute maximum ratings

- VDD pin.....VSS–0.3V to +12V
- COUT pin and V- pin.....VDD–28V to VDD+0.3V
- DOUT pin .....VSS–0.3V to VDD+0.3V
- Storage temperature.....–55°C to +125°C
- Operation temperature.....–40°C to +85°C

*1 Optional function
*2 When the discharging overcurrent detection voltage 2 function having

Pin assignment

SOT-26A

(Top view)

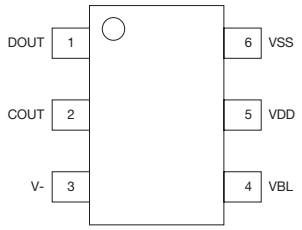

Pin no.	Symbol	Function
1	DOUT	Output of overdischarge detection (Output type is CMOS)
2	COUT	Output of overcharge detection (Output type is CMOS)
3	V-	Input terminal connected to charger negative voltage
4	VBL	Input terminal of the low side cell
5	VDD	Input terminal of the high side cell (Supply terminal)
6	VSS	VSS terminal (Connected to ground)

Selection guide

MODEL	Package	Detection / Release voltage							Detection delay time					0V charge
		Overcharge detection voltage	Overcharge release voltage	Overdischarge detection voltage	Overdischarge release voltage	Discharging overcurrent detection voltage 1	Discharging overcurrent detection voltage 2	Charging overcurrent detection voltage	Overcharge detection delay time	Overdischarge detection delay time	Discharging overcurrent detection delay time 1	Discharging overcurrent detection delay time 2	Charging overcurrent detection delay time	
		Vdet1	Vrel1	Vdet2	Vrel2	Vdet3-1	Vdet3-2	Vdet4	tVdet1	tVdet2	tVdet3-1	tVdet3-2	tVdet4	
MM3220AA1NRH	SOT26A	4.250V	4.050V	2.800V	3.000V	0.200V	-	-0.200V	1.00s	128.0ms	12.0ms	-	8.0ms	Permission
MM3220AA2NRH	SOT26A	4.250V	4.050V	2.800V	3.000V	0.100V	-	-0.100V	1.00s	128.0ms	12.0ms	-	8.0ms	Permission
MM3220B01NRH	SOT26A	4.300V	4.100V	2.000V	2.000V	0.220V	-	-	1.00s	12.0ms	12.0ms	-	-	Permission
MM3220C01NRH	SOT26A	4.300V	4.100V	2.000V	2.000V	0.085V	0.450V	-	1.15s	10.8ms	10.8ms	0.5ms	-	Permission
MM3220C02NRH	SOT26A	4.300V	4.100V	2.000V	2.000V	0.100V	0.200V	-	1.00s	12.0ms	48.0ms	4.0ms	-	Permission
MM3220C03NRH	SOT26A	4.300V	4.100V	2.000V	2.000V	0.100V	0.200V	-	1.00s	12.0ms	256.0ms	2.5ms	-	Permission
MM3220C08NRH	SOT26A	4.300V	4.100V	2.000V	2.000V	0.065V	0.200V	-	1.00s	12.0ms	256.0ms	0.5ms	-	Permission
MM3220D01NRH	SOT26A	4.250V	4.100V	3.000V	3.000V	0.200V	-	-	1.15s	144.0ms	9.0ms	-	-	Permission
MM3220D05NRH	SOT26A	4.250V	4.100V	2.500V	2.500V	0.150V	-	-	1.15s	144.0ms	9.0ms	-	-	Permission
MM3220F01NRH	SOT26A	4.225V	4.075V	2.550V	2.550V	0.200V	-	-	1.15s	144.0ms	9.0ms	-	-	Permission
MM3220G01NRH	SOT26A	4.290V	4.050V	3.000V	3.200V	0.200V	-	-0.200V	1.00s	128.0ms	12.0ms	-	8.0ms	Permission
MM3220G06NRH	SOT26A	4.250V	4.100V	2.500V	3.000V	0.150V	-	-0.100V	1.00s	12.0ms	256.0ms	-	8.0ms	Permission
MM3220G07NRH	SOT26A	4.400V	4.250V	2.500V	3.000V	0.150V	-	-0.100V	1.00s	12.0ms	256.0ms	-	8.0ms	Permission
MM3220H01NRH	SOT26A	4.225V	4.075V	3.000V	3.000V	0.200V	-	-0.200V	1.15s	144.0ms	9.0ms	-	8.0ms	Permission
MM3220H02NRH	SOT26A	4.300V	4.150V	2.400V	2.400V	0.200V	-	-0.200V	1.15s	144.0ms	9.0ms	-	8.0ms	Prohibition
MM3220H03NRH	SOT26A	4.250V	4.100V	3.200V	3.200V	0.200V	-	-0.200V	1.15s	144.0ms	9.0ms	-	8.0ms	Permission
MM3220H04NRH	SOT26A	4.230V	4.080V	2.400V	2.400V	0.200V	-	-0.200V	1.15s	144.0ms	9.0ms	-	8.0ms	Prohibition
MM3220H06NRH	SOT26A	4.230V	4.080V	2.865V	2.865V	0.200V	-	-0.200V	1.15s	144.0ms	9.0ms	-	8.0ms	Prohibition
MM3220H09NRH	SOT26A	4.225V	4.150V	2.600V	2.600V	0.250V	-	-0.200V	1.15s	1.15s	9.0ms	-	8.0ms	Prohibition
MM3220H10NRH	SOT26A	4.250V	4.175V	2.600V	2.600V	0.250V	-	-0.200V	1.15s	1.15s	9.0ms	-	8.0ms	Prohibition
MM3220H11NRH	SOT26A	4.300V	4.150V	2.300V	2.300V	0.150V	-	-0.150V	1.00s	96.0ms	20.0ms	-	8.0ms	Permission
MM3220H13NRH	SOT26A	4.250V	4.050V	2.400V	2.400V	0.200V	-	-0.200V	1.00s	128.0ms	12.0ms	-	8.0ms	Permission
MM3220H15NRH	SOT26A	4.280V	4.130V	2.800V	2.800V	0.150V	-	-0.150V	1.00s	128.0ms	9.0ms	-	8.0ms	Prohibition
MM3220H16NRH	SOT26A	4.250V	4.100V	3.000V	3.000V	0.200V	-	-0.200V	1.00s	128.0ms	8.0ms	-	8.0ms	Permission
MM3220J01NRH	SOT26A	4.275V	4.275V	2.500V	2.500V	0.085V	-	-0.060V	0.25s	20.0ms	6.0ms	-	16.0ms	Prohibition
MM3220JA1NRH	SOT26A	4.250V	4.250V	2.800V	2.800V	0.100V	-	-0.100V	1.00s	96.0ms	10.0ms	-	6.0ms	Permission
MM3220K01NRH	SOT26A	4.300V	4.100V	2.000V	2.000V	0.125V	0.300V	-0.090V	1.15s	144.0ms	12.0ms	0.5ms	8.0ms	Permission
MM3220M01NRH	SOT26A	4.280V	4.080V	2.000V	2.000V	0.200V	-	-0.100V	1.00s	128.0ms	12.0ms	-	8.0ms	Prohibition
MM3220M04NRH	SOT26A	4.280V	4.080V	2.600V	2.600V	0.135V	-	-0.085V	1.00s	128.0ms	12.0ms	-	8.0ms	Prohibition
MM3220N01NRH	SOT26A	4.250V	4.100V	2.500V	3.000V	0.150V	-	-	1.15s	144.0ms	9.0ms	-	-	Permission
MM3220N02NRH	SOT26A	4.250V	4.100V	2.500V	3.000V	0.150V	-	-	1.15s	512.0ms	288.0ms	-	-	Permission
MM3220U01NRH	SOT26A	4.250V	4.100V	2.500V	3.000V	0.150V	-	-	1.15s	512.0ms	288.0ms	-	-	Permission
MM3220Z01NRH	SOT26A	4.300V	4.100V	2.000V	2.000V	0.100V	0.180V	-	1.00s	12.0ms	256.0ms	2.5ms	-	Permission

Please inquire to us, if you request a rank other than the above.

Typical application circuit

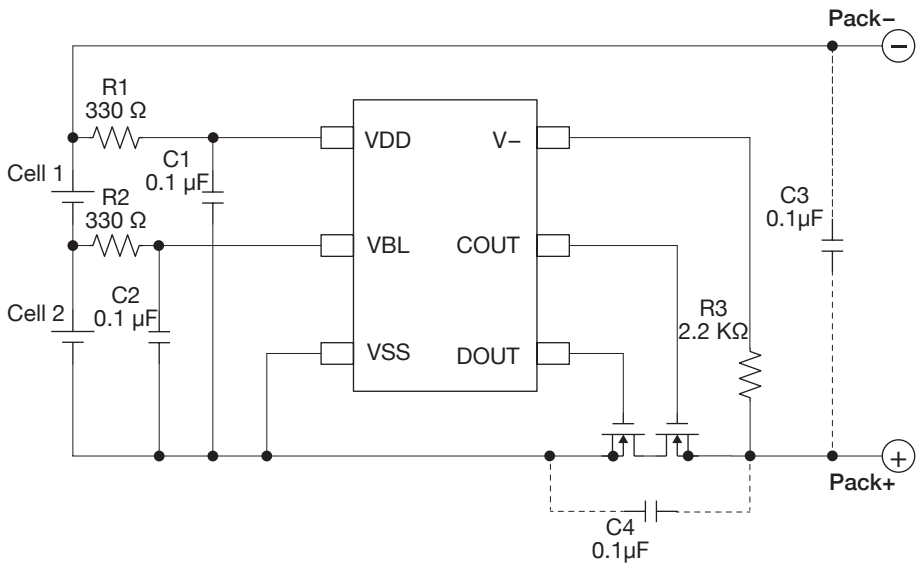

- R1 , C1 , R2 , C2 stabilize a supply voltage ripple. However, R1 is enlarged, the detection voltage shifts by voltage when current consumption flows into R1. Please decide it after confirming the characteristic. Moreover, adjust the value of C1 , C2 to 0.01μF or more to do the stability operation, please.

- R1 and R3 resistors are current limit resistance if a charger is connected reversibly or a high-voltage charger that exceeds the absolute maximum rating is connected. R1 and R3 may cause a power consumption will be over rating of power dissipation, therefore the “R1+R3” should be more than 1kohm. Moreover, if R3 is too enlarged, the charger connection release cannot be occasionally done after the overdischarge is detected, so adjust the value of R3 to 10kohm or less, please.

- In the state of overdischarge, The current flows through overdischarge pull-up resistance built into between VDD terminal and V- terminal when the charger is connected. As a result, current that flows into VDD terminal increases. When current increases, the voltage is generated in R1. And hysteresis might be caused. Please use it after confirming the characteristic.

- C3 and C4 capacitors have effect that the system stability about voltage ripple or imported noise. After check characteristics, decide that these capacitors should be inserted or not, where should be inserted, and capacitance value, please.

2 cells lithium–ion/lithium–polymer battery protection IC

MM3766 Series

Outline

The MM3766 series are protection IC using high voltage CMOS process for overcharge, overdischarge and overcurrent protection of the rechargeable Lithium-ion or Lithium-polymer battery. The overcharge, overdischarge, discharging rechargeable two cells Lithium-ion or Lithium-polymer battery can be detected. Each of these IC composed of four voltage detectors, short detection circuit, reference voltage sources, oscillator, counter circuit and logical circuits.

Features

(Unless otherwise specified, Ta=25°C)

(1) Range and accuracy of detection and release voltage

- Overcharge detection voltage.....3.6V to 4.5V, 5mV Step..... ±15mV
  ±20mV (Topr=-5 to +60°C)
- Overcharge release voltage .....3.4V to 4.5V, 50mV Step..... ±30mV
- Overdischarge detection voltage .....2.0V to 3.0V, 50mV Step..... ±35mV
- Overdischarge release voltage.....2.0V to 3.5V, 50mV Step..... ±50mV
- Discharging overcurrent detection voltage 1 .....20mV to 300mV, 5mV Step..... ±ΔV
  Rerfer to p.2 ..... ±7% (Min.±10mV)
- Discharging overcurrent detection voltage 2 .....40mV to 600mV, 10mV Step..... ±ΔV
  Rerfer to p.2 ..... ±15% (Min.±20mV)
- Short detection voltage.....Selection from 0.7V, 0.8V, 0.9V.... ±300mV or ±ΔV
  Rerfer to p.2 ..... ±300mV
- Charging overcurrent detection voltage.....-300mV to -40mV, 5mV Step..... ±ΔV
  Rerfer to p.2 ..... ±10% (Min.±20mV)

(2) Range of detection delay time

- Overcharge detection delay time.....Selection from 256ms to 4.6s ..... ±20%
- Overdischarge detection delay time .....Selection from 8ms to 2s ..... ±20%
- Discharging overcurrent detection delay time 1 .....Selection from 8ms to 512ms ..... ±20%
- Discharging overcurrent detection delay time 2 .....Selection from 0.5ms to 6ms ..... ±20%
- Charging overcurrent detection delay time.....Selection from 4ms to 64ms ..... ±20%
- Short detection delay time.....300usec fixed ..... -50% , +100%

(3) 0V battery Charge functionSelectable "Permission" or "inhibition"

(4) Current consumption

- Current consumption of VDD pin(Vcell=4.0V).....Typ. 4.0uA Max. 8.0uA
- Current consumption of VDD pin(Vcell=2.0V).....Max. 0.1uA
  In case Overdischarge latch function Enable.
  Max. 2.5uA
  In case Overdischarge latch function Disable.
- Current consumption of VBL pin (Vcell=4.0V).....Min. -0.3uA, Max. 0.3uA

(5) Absolute maximum ratings

- VDD Pin.....VSS-0.3V to VSS+12V
- VBL Pin .....VSS-0.3V to VDD+0.3V
- Voltage between cell input pins .....-0.3V to +10V
- DOUT Pin .....VSS-0.3V to VDD+0.3V
- COUT Pin, V- Pin .....VDD-28V to VDD+0.3V
- Storage temperature.....-55 to +125°C

(6) Recommend operating conditions

- Operation temperature.....-40 to +85°C
- Operation voltage .....VSS+1.5V to +10.0V

Please inquire to us, if you need another spec.

※ Current detection voltage Accuracy

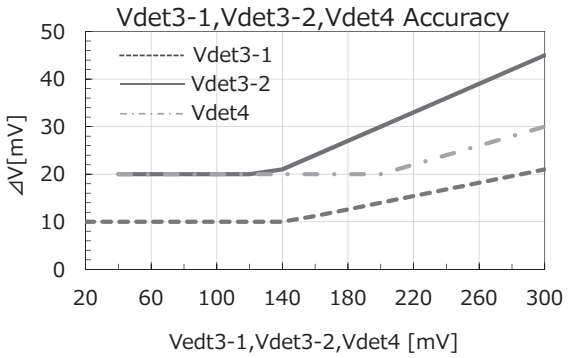

※ When there is not Vdet3-2,
detection accuracy of Vshort is equivalent to Vdet3-2.

These range and accuracy are the one of the standard setting. It may be different in each IC rank.Please refer to an individual specifications about detail parameters.

Pin assignment

SOT-26B

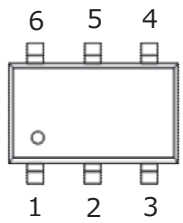

Pin no.	Symbol	Function
1	DOUT	Discharge FET control terminal
2	COUT	Charge FET control terminal
3	V-	Charger negative voltage input terminal
4	VBL	Input terminal of the low side cell
5	VDD	Positive power supply voltage input terminal
6	VSS	Negative power supply voltage input terminal

Please inquire to us, if you request a rank other than the above.

LINE UP

MODEL	Package	0V charge	Protection mode latch function						Hys-Cancel	
			Overcharge	Overcharge release V- release voltage	Overdischarge	Overdischarge release V- release voltage	Discharging overcurrent	Discharge overcurrent V- release voltage	Overcharge	Overdischarge
MM3766A01NRH	SOT-26B	Permission	Enable	Vdet4	Enable	Vdet3-1	Disable	Vdet3-1	Enable	Enable
MM3766C01NRH	SOT-26B	Permission	Disable	-	Enable	Vdet3-1	Disable	Vdet3-1	Enable	Enable
MM3766C02NRH	SOT-26B	Permission	Disable	-	Enable	Vdet3-1	Disable	Vdet3-1	Enable	Enable
MM3766C03NRH	SOT-26B	Permission	Disable	-	Enable	Vdet3-1	Disable	Vdet3-1	Enable	Enable
MM3766C11NRH	SOT-26B	Inhibition※9	Disable	-	Enable	Vdet3-1	Disable	Vdet3-1	Enable	Enable
MM3766D01NRH	SOT-26B	Permission	Disable	-	Enable	Vdet3-1	Disable	Vdet3-1	Enable	Disable

MODEL	Overcharge detection voltage	Overcharge release voltage	Overdischarge detection voltage	Overdischarge release voltage	Discharging overcurrent detection voltage 1	Discharging overcurrent detection voltage 2	Charging overcurrent detection voltage	Short detection voltage	Delay time *1	Discharge overcurrent release resistance	Pull-up resistance of V- Pin
	Vdet1	Vrel1	Vdet2	Vrel2	Vdet3-1	Vdet3-2	Vdet4	Vshort	Rshort	Rpu	Vshort1
	V	V	V	V	V	-	V	V	V	kΩ	kΩ
MM3766A01NRH	4.250	4.050	2.800	3.000	0.100	-	-0.100	1.000	A	100	300
MM3766C01NRH	4.300	4.150	2.800	3.000	0.150	-	-0.150	0.500	B	100	300
MM3766C02NRH	4.425	4.225	2.750	3.050	0.150	-	-0.100	0.500	B	100	300
MM3766C03NRH	4.250	4.050	2.400	3.000	0.200	-	-0.200	1.100	C	50	300
MM3766C11NRH	4.250	4.100	2.500	3.000	0.200	-	-0.100	0.500	B	100	300
MM3766D01NRH	4.250	4.100	3.000	3.000	0.200	-	-0.200	0.500	B	100	300

*1 Delay time

	tVdet1	tVrel1	tVdet2	tVrel2	tVdet3-1	tVrel3-1	tVdet3-2	tVrel3-2	tVdet4	tVrel4	tshort
	s	ms	ms	ms	ms	ms	ms	ms	ms	ms	μs
A	1.02	16.0	96.0	1.0	10.0	1.0	-	-	6.0	1.0	300
B	1.02	16.0	128.0	1.0	8.0	1.0	-	-	8.0	1.0	300
C	1.02	16.0	128.0	1.0	12.0	1.0	-	-	8.0	1.0	300

※9 0V battery charge inhibition battery voltage" of C11 is Typ. 1.3V.

*Please inquire to us, if you need another spec.

Typical application circuit

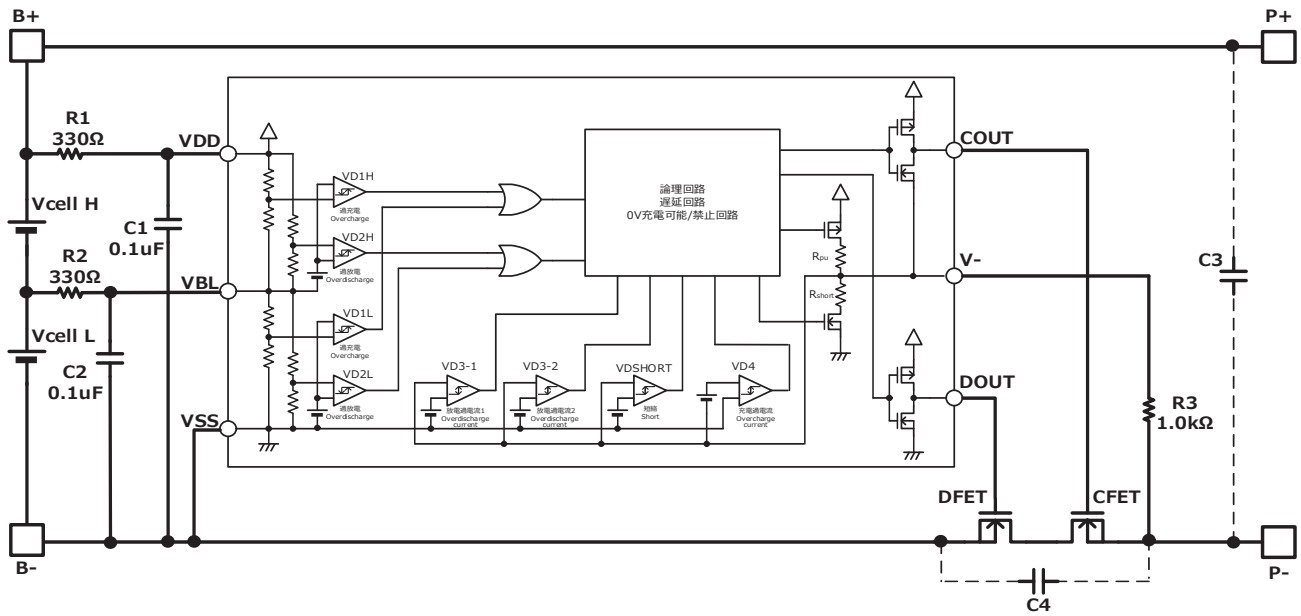

Symbol	Part	Min.	Typ.	Max.	Purpose
R1,R2	Resistor	-	330Ω	1KΩ	For voltage fluctuation, For ESD
C1,C2	Capacitor	0.033uF	0.1uF	1.0uF	For voltage fluctuation
R3	Resistor	-	1.0kΩ	2.2kΩ	Current limit for charger reverse connection
C3	Capacitor	-	0.1uF	-	For exogenous noise
C4	Capacitor	-	0.1uF	-	For exogenous noise
DFET CFET	Nch MOS FET	-	-	-	Charge and discharge control

This typical application circuit and constant value do not guarantee proper operation.
Please evaluate thoroughly by actual application to set up constants.

3 cells lithium–ion/lithium–polymer battery protection IC

MM3783 Series

Outline

MM3783 series are an overcharge, overdischarge, overcurrent and temperature protection IC for a lithium-ion / lithiumpolymer rechargeable battery. lithium–ion / lithium–polymer battery overcharge each cell, over discharge, and discharge and charging overcurrent, short circuits can be detected.
The detection of the temperature is enabled by connecting resistance between thermistor, TH terminal -VSS terminals between REG terminal –TH terminals.
Each of these IC composed of six voltage detectors, short detection circuit, reference voltage sources, delay time generation circuit , logical circuits and regulator circuit etc.

Features

(Unless otherwise specified, Ta=25°C)

(1) Range and accuracy of detection/release voltage
- Overcharge detection voltage.....3.6V to 4.5V, 5mV steps ..... Accuracy±25mV (Topr=0°C to +50°C)
- Overcharge release voltage .....3.4V to 4.5V, 50mV steps ..... Accuracy±50mV
- Overdischarge detection voltage.....2.0V to 3.0V, 50mV steps ..... Accuracy±80mV
- Overdischarge release voltage.....2.0V to 3.5V, 50mV steps ..... Accuracy±100mV
- Discharge overcurrent detection voltage 1 ....30mV to 300mV, 5mV steps ..... Accuracy±15mV /±10mV
- Discharge overcurrent detection voltage 2 ....Twice or 4 times of discharging overcurrent 1 .... Accuracy±20%
- Short detection voltage.....4 or 8 times of discharging overcurrent 1 ..... Accuracy±30%
- Charging overcurrent detect voltage .....–300mV to –20mV, 5mV steps..... Accuracy±15%/±10mV
- Temperature protection detection voltage.....–30°C to +80°C step 3 level setting is possible..... Accuracy±3°C

(2) Each detection delay time set by the external capacitor

(3) Range and accuracy of regulator output voltage
- VOUT pin output voltage .....1.5V to 3.0V, 50mV steps ..... Accuracy±25mV

(4) Low current consumption
- Consumption current1 (VDD), Vcell=4.3V ..... Typ. 20.0μA, Max. 30.0μA
- Consumption current2 (VDD), Vcell=3.5V ..... Typ. 18.0μA, Max. 23.0μA
- Consumption current3 (VDD), Vcell=2.0V ..... Typ. 1.5μA, Max. 3.0μA

(5) Absolute maximum ratings
- VDD pin ..... V_{SS}–0.3V to V_{SS}+21V
- Between the input terminals of voltage of battery ..... –0.3 to +10V
- V– pin, 0V pin ..... V_{DD}–30V to V_{DD}+0.3V
- DCHG pin, CS pin, VSS_CS pin ..... V_{SS}–0.3V to V_{DD}+0.3V
- REG, TH pin ..... V_{SS}–0.3V to V_{DD}+0.3V
- COV pin, CUV pin ..... V_{SS}–0.3V to V_{DD}+0.3V
- CCOC pin, CDOC pin, CTH pin ..... V_{SS}–0.3V to V_{DD}+0.3V
- Storage temperature ..... –55°C to +125°C
- Operation temperature..... –30°C to +80°C

(6) Charge and discharge FET control to temperature
- The high low temperature detection protection of the 3 level is possible
- Ta<–10°C Charge and discharge prohibition Ta>50°C Charge prohibition Ta>70°C Charge and discharge prohibition

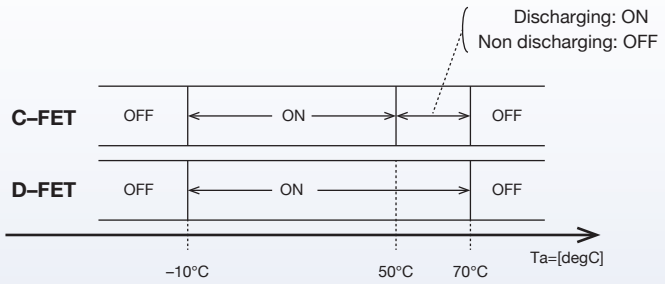

Pin assignment

TSOP-16B

(Top view)

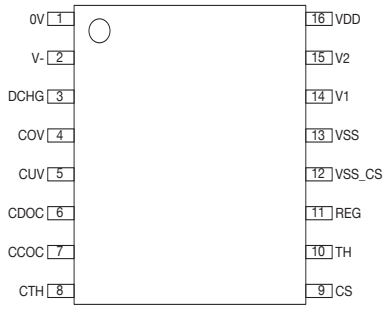

Pin no.	Symbol	Pin no.	Symbol
1	0V	9	VDD
2	V-	10	V2
3	DCHG	11	V1
4	COV	12	VSS
5	CUV	13	VSS_CS
6	CDOC	14	REG
7	CCOC	15	TH
8	CTH	16	CS

Selection guide

MODEL	detection voltage / release voltage								Temperature protection detection			
	Overcharge detection voltage	Overcharge release voltage	Overdischarge detection voltage	Overdischarge release voltage	Discharging overcurrent detection voltage 1	Discharging overcurrent detection voltage 2	Short detection voltage	Charging overcurrent detection voltage	Temperature protection detection temperature 1	Temperature protection detection temperature 2	Temperature protection detection temperature 3	0V charge
	V_{DET1}	V_{REL1}	V_{DET2}	V_{REL2}	V_{DET3-1}	V_{DET3-2}	V_{SHORT}	V_{DET4}	T_{THD1}	T_{THD2}	T_{THD3}	
	V	V	V	V	V	V	V	V	°C	°C	°C	
MM3783A01VBH	4.250	4.100	2.750	3.000	0.040	0.080	0.160	–0.020	–10	50	70	Permission
MM3783A02VBH	4.200	4.050	2.750	3.000	0.040	0.080	0.160	–0.020	–10	50	70	Permission
MM3783C01VBH	4.180	4.100	2.750	3.000	0.090	0.180	0.360	–0.020	0	55	65	Permission
MM3783C02VBH	4.200	4.100	2.750	3.000	0.090	0.180	0.360	–0.020	–10	55	75	Permission
MM3783C06VBH	4.250	4.100	2.750	3.000	0.040	0.080	0.160	–0.020	NA	60	75	Permission
MM3783C07VBH	4.250	4.150	2.500	3.000	0.090	0.180	0.360	–0.020	–20	60	75	Permission

MODEL	detection delay time / release delay time											
	Overcharge detection delay time (at COV=0.1uF)	Overcharge release delay time (at COV=0.1uF)	Overdischarge detection delay time (at CUV=0.1uF)	Overdischarge release delay time (at COV=0.1uF)	Discharging overcurrent detection delay time 1 (at CDOC=0.01uF)	Discharging overcurrent detection delay time 2 (at CDOC=0.01uF)	Discharging overcurrent release delay time (at CDOC=0.01uF)	Short detection delay time	Charging overcurrent detection delay time (at CCOC=0.047uF)	Charging overcurrent release delay time (at CCOC=0.047uF)	Temperature protection detection delay time (at CTH=0.1uF)	Temperature protection release delay time (at CTH=0.1uF)
	t_{VDET1}	t_{VREL1}	t_{VDET2}	t_{VREL2}	$t_{VDET3-1}$	$t_{VDET3-2}$	t_{VREL3}	t_{SHORT}	t_{VDET4}	t_{VREL4}	t_{VDETS}	t_{VRELS}
	sec	msec	sec	msec	msec	msec	msec	μsec	msec	msec	sec	sec
MM3783A01VBH	1.0	100	1.0	100	100	25.0	100	200	470	47.0	1.0	0.1
MM3783A02VBH	1.0	100	1.0	100	100	25.0	100	200	470	47.0	1.0	0.1
MM3783C01VBH	1.0	100	1.0	100	100	10.0	100	200	470	47.0	1.0	0.1
MM3783C02VBH	1.0	100	1.0	100	100	10.0	100	200	470	47.0	1.0	0.1
MM3783C06VBH	1.0	100	1.0	100	100	10.0	10	200	470	94.0	1.0	0.1
MM3783C07VBH	1.0	100	1.0	100	100	10.0	10	200	470	94.0	1.0	0.1

Please inquire to us, if you request a rank other than the above.

Typical application circuit

3 cells protection circuit

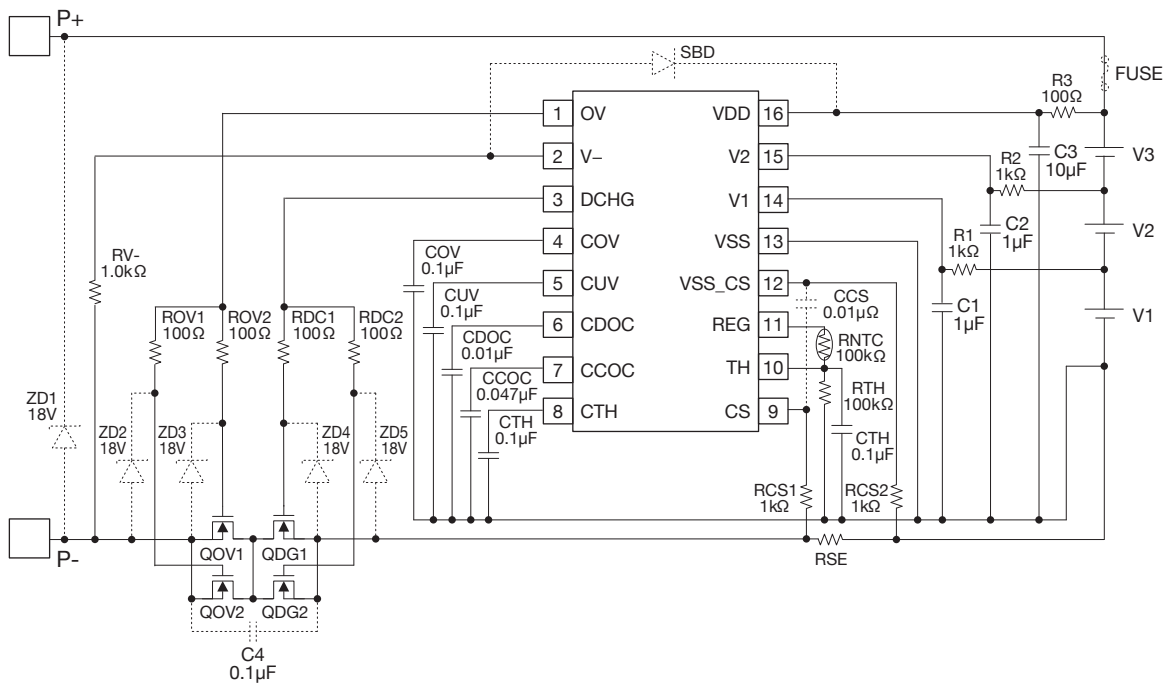

3 to 5 cells lithium–ion/lithium–polymer battery protection IC

MM3474 Series

Outline

MM3280 series are an overcharge, overdischarge and overcurrent protection IC for a lithium–ion / lithium–polymer rechargeable battery. Lithium–ion / Lithium–polymer battery overcharge each cell, over discharge, and discharge overcurrent, short circuits can be detected.
This supports 3 to 5 serial cells connected in series, and switches over to the desired no. of cells by sending High/Low signal to SEL terminal.
This also provides the control terminals of output over discharge detection (SDC) and output over charge detection (SOC), which allows configuring an application with fewer external parts for 6 or more cells connected in series.

Features

(Unless otherwise specified, Ta=25°C)

(1) Range and accuracy of detection/release voltage
- Overcharge detection voltage.....3.6V to 4.5V, 5mV steps ..... Accuracy±25mV (Topr=0 to +50°C)
- Overcharge release voltage .....3.4V to 4.5V, 50mV steps ..... Accuracy±50mV
- Overdischarge detection voltage.....2.0V to 3.0V, 50mV steps ..... Accuracy±80mV
- Overdischarge release voltage.....2.0V to 3.4V, 50mV steps ..... Accuracy±100mV
- Overcurrent detect voltage .....50mV to 300mV, 5mV steps ..... Accuracy±15mV
- Short detection voltage.....0.2V to 1.0V, 50mV steps ..... Accuracy±100mV

(2) Each detection delay time set by the external capacitor

(3) The setting for three cell , for four cell , and for five cell protection can be set with the SEL1 pin and the SEL2 pin

(4) The charge and discharge of the battery can be controlled with SDC pin and SOC pin

(5) Low current consumption
- Consumption current1 (Vdd), Vcell=4.4V.....Typ. 10.0μA, Max. 20.0μA
- Consumption current2 (Vdd), Vcell=3.5V.....Typ. 5.0μA, Max. 10.0μA
- Consumption current3 (Vdd), Vcell=1.8V.....Typ. 1.5μA, Max. 3.0μA
- Consumption current1 (V5), Vcell=4.4V.....Typ. 4.0μA, Max. 8.0μA
- Consumption current2 (V5), Vcell=3.5V.....Typ. 3.0μA, Max. 6.0μA
- Consumption current3 (V5), Vcell=1.8V.....Typ. 1.5μA, Max. 3.0μA

(6) Absolute maximum ratings
- VDD pin..... V_{SS2}–0.3V to V_{SS2}+30V
- V5 pin..... V_4–0.3V to V_{DD}+0.3V
- Between the input terminals of voltage of battery..... –0.3 to +10V
- V– pin, CS pin..... V_{DD}–30V to V_{DD}+0.3V
- 0V pin, DCHG pin..... V_{SS2}–0.3V to V_{DD}+0.3V
- SEL pin..... V_{SS2}–0.3V to V_{DD}+0.3V
- SDC pin, SOC pin ..... V_{SS2}–0.3V to V_{DD}+0.3V
- Storage temperature..... –55°C to +125°C
- Operation temperature..... –40°C to +85°C

Pin assignment

TSOP-20D

(Top view)

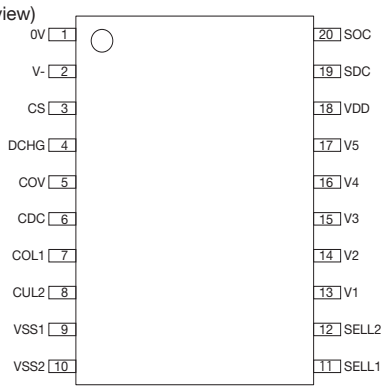

Pin no.	Symbol	Pin no.	Symbol
1	0V	11	SEL1
2	V-	12	SEL2
3	CS	13	V1
4	DCHG	14	V2
5	COV	15	V3
6	CDC	16	V4
7	COL1	17	V5
8	CUL2	18	VDD
9	VSS1	19	SDC
10	VS2	20	SOC

Selection guide

Product name	Detection / Release voltage						Detection / Release voltage						Optional function
	Overcharge detection voltage	Overcharge release voltage	Overdischarge detection voltage	Overdischarge release voltage	Overcurrent detection voltage	Short detection voltage	Overcharge detection dead time	Overcharge release dead time	Overdischarge detection dead time	Overdischarge release dead time	Overcurrent detection dead time	Overcurrent release dead time	Overdischarge release
	V_{CELLU}	V_{CELLO}	V_{CELLS}	V_{CELLD}	V_{OC}	V_{SHORT}	t_{OV1}	t_{OV2}	t_{DC1}	t_{DC2}	t_{OC1}	t_{OC2}	*1
	V	V	V	V	mV	V	sec	msec	sec	msec	msec	msec	
MM3474C01VBE	4.250	4.150	2.800	3.000	250	1.00	1.0	0.1	1.0	Max.15	10.0	10.0	Non Latch
MM3474C02VBE	4.250	4.150	2.400	2.600	250	1.00	1.0	0.1	1.0	Max.15	10.0	10.0	Non Latch
MM3474C03VBE	4.250	4.150	2.800	3.000	250	0.80	1.0	0.1	1.0	Max.15	10.0	10.0	Non Latch
MM3474C04VBE	4.250	4.150	2.800	3.000	150	0.25	1.0	0.1	1.0	Max.15	10.0	10.0	Latch
MM3474C05VBE	4.250	4.150	2.800	3.000	150	0.25	1.0	0.1	1.0	Max.15	10.0	10.0	Non Latch
MM3474D01VBE	3.850	3.650	2.300	2.500	150	1.00	1.0	0.1	1.0	Max.15	10.0	10.0	Non Latch
MM3474D03VBE	3.800	3.600	2.000	2.500	150	0.60	1.0	0.1	1.0	Max.15	10.0	10.0	Non Latch
MM3474E01VBE	4.250	4.150	2.800	3.000	150	1.00	1.0	0.1	1.0	Max.15	10.0	10.0	Non Latch
MM3474E02VBE	4.200	4.100	2.800	3.000	150	1.00	1.0	0.1	1.0	Max.15	10.0	10.0	Non Latch
MM3474E03VBE	4.175	4.100	2.800	3.000	150	0.50	1.0	0.1	1.0	Max.15	10.0	10.0	Non Latch
MM3474E04VBE	4.250	4.150	2.800	3.000	100	0.50	1.0	0.1	1.0	Max.15	10.0	10.0	Non Latch
MM3474E05VBE	4.250	4.150	2.800	3.000	50	0.40	1.0	0.1	1.0	Max.15	10.0	10.0	Non Latch
MM3474F01VBE	4.250	4.150	2.500	3.000	150	1.00	1.0	0.1	1.0	Max.15	10.0	10.0	Non Latch
MM3474F02VBE	4.200	4.100	2.500	3.000	100	1.00	1.0	0.1	1.0	Max.15	10.0	10.0	Non Latch
MM3474F03VBE	4.250	4.150	2.500	3.000	100	0.30	1.0	0.1	1.0	Max.15	10.0	10.0	Latch
MM3474F04VBE	4.250	4.210	2.500	3.000	100	0.80	1.0	0.1	1.0	Max.15	10.0	10.0	Non Latch
MM3474F05VBE	4.250	4.150	2.500	3.000	100	0.25	1.0	0.1	1.0	Max.15	10.0	10.0	Non Latch
MM3474F06VBE	4.225	4.150	2.000	3.000	50	0.20	1.0	0.1	1.0	Max.15	10.0	10.0	Non Latch
MM3474F08VBE	4.400	4.300	2.500	3.000	120	0.25	1.0	0.1	1.0	Max.15	10.0	10.0	Non Latch
MM3474G01VBE	4.200	4.100	2.750	3.000	100	1.00	1.0	0.1	1.0	Max.15	10.0	10.0	Non Latch
MM3474G02VBE	4.250	4.150	2.750	3.000	100	1.00	1.0	0.1	1.0	Max.15	10.0	10.0	Non Latch
MM3474G03VBE	4.200	4.100	2.750	3.000	100	0.40	1.0	0.1	1.0	Max.15	10.0	10.0	Non Latch
MM3474G05VBE	4.250	4.150	2.750	3.000	100	0.40	1.0	0.1	1.0	Max.15	10.0	10.0	Non Latch
MM3474G06VBE	4.225	4.100	2.750	3.000	100	0.80	1.0	0.1	1.0	Max.15	10.0	10.0	Non Latch
MM3474G07VBE	4.250	4.150	2.750	3.000	100	0.20	1.0	0.1	1.0	Max.15	10.0	10.0	Non Latch
MM3474J01VBE	4.250	4.100	2.800	3.000	50	1.00	1.0	0.1	1.0	Max.15	10.0	10.0	Non Latch
MM3474K02VBE	4.250	4.100	3.000	3.225	100	0.40	1.0	0.1	1.0	Max.15	10.0	10.0	Non Latch
MM3474K03VBE	4.250	4.190	3.000	3.200	80	0.70	1.0	0.1	1.0	Max.15	10.0	10.0	Latch

Product name	Detection / Release voltage						Detection / Release voltage						Optional function
	Overcharge detection voltage	Overcharge release voltage	Overdischarge detection voltage	Overdischarge release voltage	Overcurrent detection voltage	Short detection voltage	Overcharge detection dead time	Overcharge release dead time	Overdischarge detection dead time	Overdischarge release dead time	Overcurrent detection dead time	Overcurrent release dead time	Overdischarge release
	V_{CELLU}	V_{CELLO}	V_{CELLS}	V_{CELLD}	V_{OC}	V_{SHORT}	t_{OV1}	t_{OV2}	t_{DC1}	t_{DC2}	t_{OC1}	t_{OC2}	*1
	V	V	V	V	mV	V	sec	msec	sec	msec	msec	msec	
MM3474K04VBE	4.175	4.100	3.000	3.200	100	0.50	1.0	0.1	1.0	Max.15	10.0	10.0	Non Latch
MM3474L02VBE	3.750	3.550	2.200	2.700	100	0.40	1.0	0.1	1.0	Max.15	10.0	10.0	Non Latch
MM3474L03VBE	3.650	3.500	2.000	2.700	200	0.25	1.0	0.1	1.0	Max.15	10.0	10.0	Non Latch
MM3474L04VBE	3.750	3.550	2.200	2.700	100	0.40	1.0	0.1	1.0	Max.15	10.0	10.0	Latch
MM3474M01VBE	4.350	4.150	2.300	3.000	150	0.50	1.0	0.1	1.0	Max.15	10.0	10.0	Non Latch
MM3474N01VBE	3.900	3.600	2.000	3.000	100	0.20	1.0	0.1	1.0	Max.15	10.0	10.0	Latch
MM3474P03VBE	4.230	4.220	2.800	3.400	100	0.80	1.0	0.1	1.0	Max.15	10.0	10.0	Non Latch
MM3474P04VBE	4.200	4.170	2.750	2.800	100	1.00	1.0	0.1	1.0	Max.15	10.0	10.0	Non Latch
MM3474P05VBE	4.200	4.140	2.750	2.810	100	0.50	1.0	0.1	1.0	Max.15	10.0	10.0	Latch
MM3474P06VBE	4.230	4.220	2.800	3.000	100	0.80	1.0	0.1	1.0	Max.15	10.0	10.0	Non Latch
MM3474S01VBE	3.600	3.500	2.800	3.000	100	0.40	1.0	0.1	1.0	Max.15	10.0	10.0	Non Latch

*1 Non Latch : voltage release
Latch : voltage release + load remove

2,000pcs/Reel

Please inquire to us, if you request a rank other than the above.

Typical application circuit

5 cells protection circuit

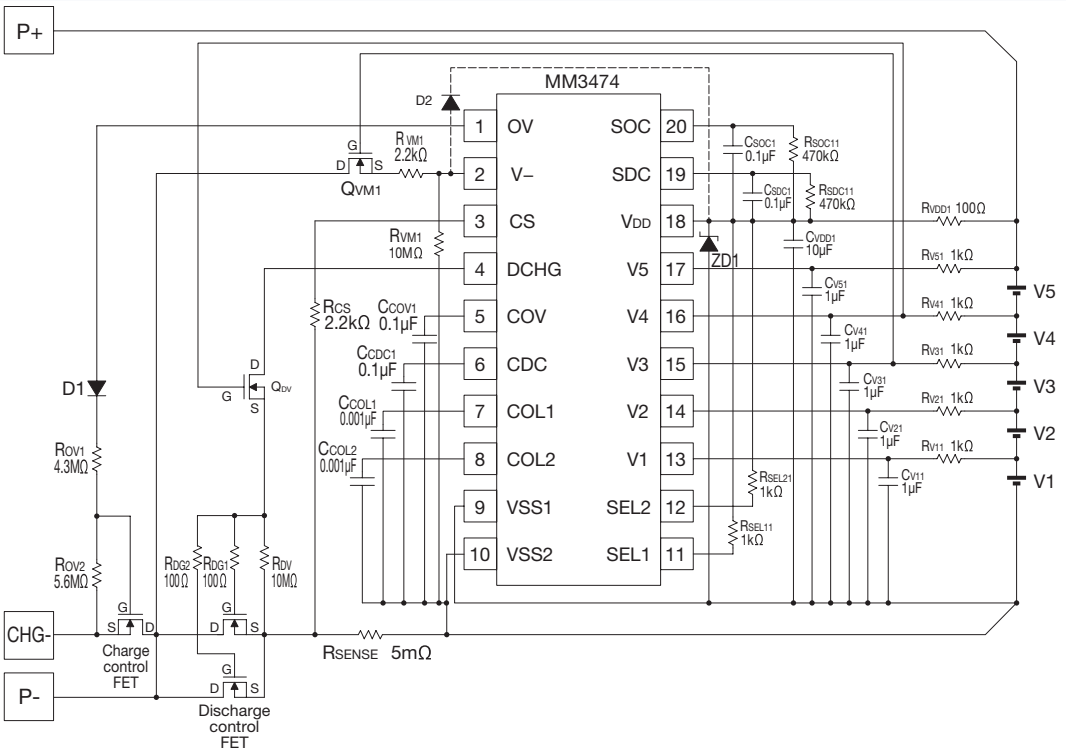

SEL1	SEL2	Mode
H	H	5Cell in series
H	L	4Cell in series (Connect V1 and VSS terminal)
L	H	3Cell in series (Connect V2,V1 and VSS terminal)

*It becomes a static test mode in SEL1=SEL2=Low.

Typical application circuit

10 cells protection circuit

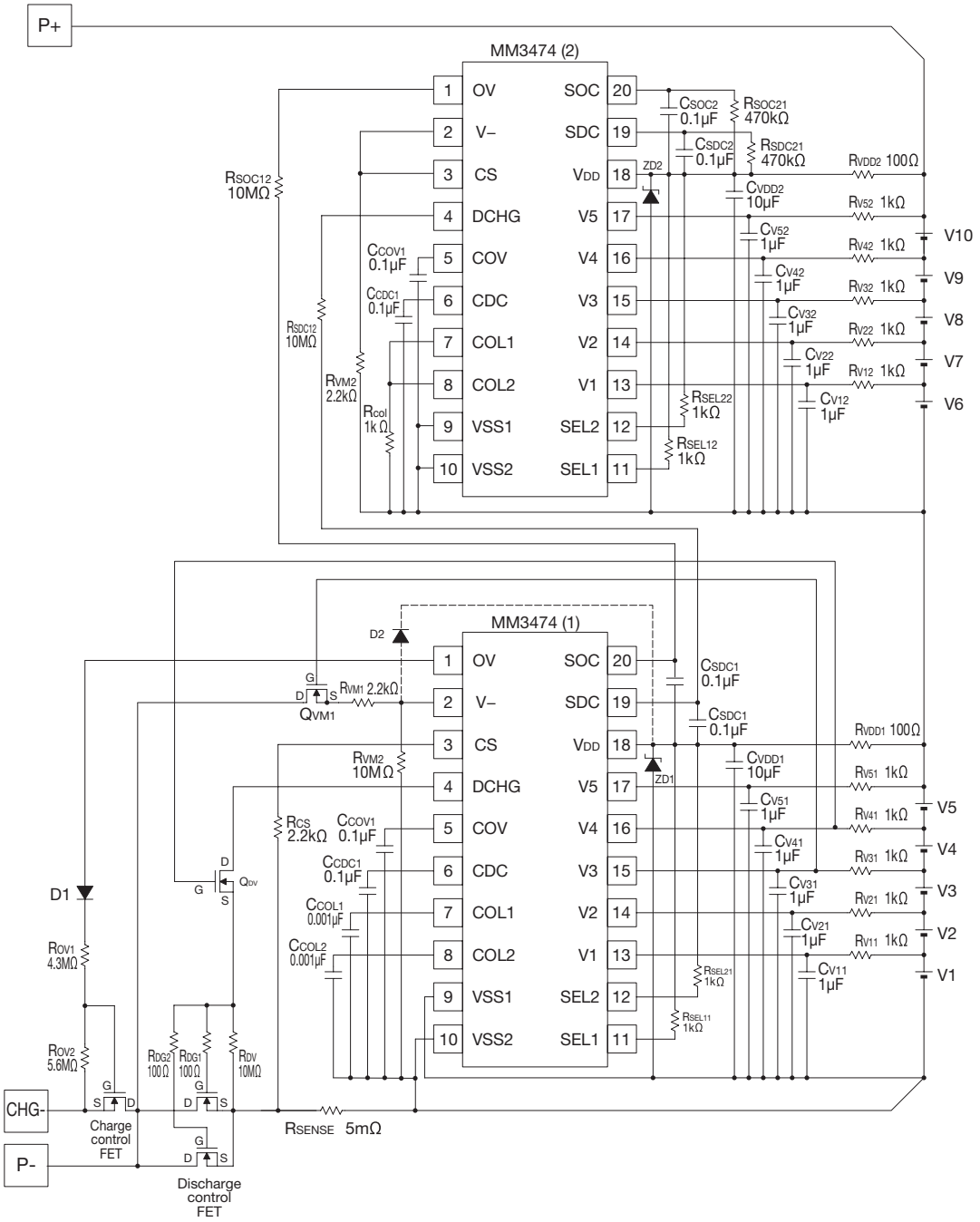

1 SECONDARY BATTERY ICS

3 to 5 cells lithium–ion/lithium–polymer battery protection IC

MM3575 Series

Outline

The **MM3575** series are protection IC using high voltage CMOS process for overcharge, overdischarge and overcurrent protection of the rechargeable lithium–ion or lithium-polymer battery. The overcharge, overdischarge, discharging overcurrent, charging overcurrent, cell balance and V5 to V3 pin disconnect of the rechargeable 3 to 5cell Lithium-ion or Lithium-polymer battery can be detected. By using cascade connection, it is also possible to protect 6 or more cells rechargeable Lithium-ion battery. And the regulator can be constructed by using external Nch MOS FET. The internal circuit of IC is composed by the voltage detector, the reference voltage source, delay time control circuit, and the logical circuit, etc.

Features

(Unless otherwise specified, Ta=25°C)

(1) Range and accuracy of detection/release voltage

- Overcharge detection voltage..... 3.6V to 4.5V, 5mV steps..... Accuracy±25mV (Topr=0°C to +50°C)
- Overcharge release voltage ..... 3.4V to 4.5V, 50mV steps..... Accuracy±50mV
- Overdischarge detection voltage..... 2.0V to 3.0V, 50mV steps..... Accuracy±80mV
- Overdischarge release voltage *4 ..... 2.0V to 3.5V, 50mV steps..... Accuracy±100mV
- Discharging overcurrent detection voltage1 ..... 30mV to 300mV, 5mV steps..... Accuracy±15mV (Typ. ±50mV to)
- Discharging overcurrent detection voltage2 ..... Twice or 4 times of discharging overcurrent1*1.... Accuracy±15%
- Short detection voltage..... 4 or 8 times or discharging overcurrent 1 *1..... Accuracy±100mV
- Charging overcurrent detect voltage ..... -300mV to -20mV, 5mV steps..... Accuracy±10mV
- Cell balance detection voltage..... 3.6V to 4.5V, 5mV steps..... Accuracy±30mV (Ta=0°C to +50°C)

(2) Ragen of detection delay time

- Overcharge detection delay time..... Selection from 0.25s, 1.0s, 1.2s, 4.1s..... Accuracy±25%
- Overcharge release delay time..... Selection from 10ms, 24ms, 48ms, 100ms... Accuracy±25%
- Overdischarge detection delay time ..... Selection from 0.25s, 1.0s, 1.2s, 4.1s..... Accuracy±25%
- Overdischarge release delay time..... Selection from 4ms, 8ms, 12ms, 24ms ..... Accuracy±25%
- Discharging overcurrent detection delay time1 .... Setting by capacitor of COC pin. *2 ..... Accuracy±30%
- Discharging overcurrent detection delay time2 .... Setting by capacitor of COC pin. *2 ..... Accuracy±30%
- Short detection delay time..... Selection from 100μs, 200μs, 300μs..... Accuracy±50%
- Short detection release time..... Selection from 100μs, 200μs, 300μs..... Accuracy±50%
- Discharging overcurrent release delay time..... Setting by capacitor of COC pin. *2 ..... Accuracy±30%
- Charging overcurrent detection delay time..... Setting by capacitor of COC pin. *2 ..... Accuracy±30%
- Charging overcurrent release delay time ..... Setting by capacitor of COC pin. *2 ..... Accuracy±30%
- Disconnected detection delay time ..... Selection from 25ms, 50ms, 100ms..... Accuracy±25%
- Disconnected release delay time..... Selection from 1024ms, 2048ms, 4096ms ... Accuracy±25%
- Cell balance detection delay time..... Selection from 0.1s, 0.25s, 0.5s *3 ..... Accuracy±25%
- Cell balance releaes delay time ..... Selection from 4ms, 8ms, 12ms ..... Accuracy±25%

*1 Optional function.

*2 Since the capacity is the same, each delay times will change when a value is changed without short detection delay time.

*3 Cannot do shorter than disconnect detection delay time.

*4 The discharge state release method can choose a voltage release and a load open.

(3)Protected operation can be detectof V5 to V1 pin disconnection

- When any of V5 to V1 pin open, it will detect disconnection and charge and discharge prohibited state.
- Protection mode of disconnection can be chosen from three, prohibition of charge, prohibition of discharge and prohibition of charge and discharge (Optional) .
- The release from disconnection protection is done by disconnection point being connected.

(4) The setting for three cell , for four cell , and for five cell protection can be set with the SEL pin.

(5) The charge and discharge of the battery can be controlled with SDC pin and SOC pin.

(6) 0V battery charge function Selection from “Permission” or “Prohibition”

(7) Power save mode Built–in

- It is possible to make it shift to low consumption current mode arbitrarily.
- Transition of power save mode is used by SDC,SOC pins.
- It shifts to a power save mode by making SDC and SOC pin into a VSS level.

(8) Regulator function Built–in

- Connecting drain of external Nch MOS FET gate to DRIVE pin and source to REG_IN pin,it can operate as a regulator.
- The regulator operates independently with protected operation, such as overcharge detection.
- Regulator voltage can be chosen at 0.1V step among 3.3V to 5.0V.

(9) Low current consumption

- VDD pin current consumption(Vcell=4.3V) ..... Typ. 25.0μA Max. 35.0μA
- VDD pin current consumption(Vcell=3.5V) ..... Typ. 20.0μA Max. 30.0μA
- VDD pin current consumption(Vcell=2.0V) ..... Typ. 10.0μA, Max. 15.0μA
- VDD pin current consumption at power save1(Vcell=3.5V) ..... Typ. 12.0μA, Max. 16.0μA
- VDD pin current consumption at power save2(Vcell=3.5V) ..... Typ. 4.0μA, Max. 6.0μA
- V5 pin current consumption(Vcell=4.3V) ..... Typ. 4.0μA, Max. 6.0μA
- V5 pin current consumption(Vcell=3.5V) ..... Typ. 2.0μA, Max. 3.0μA
- V5 pin current consumption(Vcell=2.0V) ..... Typ. 1.0μA, Max. 1.5μA
- V5 pin current consumption at power save(Vcell=3.5V) ..... Max. 0.05μA

(10) input current

- V4 pin input current(Vcell=3.5V) ..... Max. 1.0μA
- V3 pin input current(Vcell=3.5V) ..... Max. 1.0μA
- V2 pin input current(Vcell=3.5V) ..... Max. 1.0μA
- V1 pin input current(Vcell=3.5V) ..... Max. 1.0μA

(11) Absolute maximum ratings

- VDD, CS1, CS2 pin ..... VSS0.3V to VSS+30V
- V5 pin ..... V40.3V to VDD+0.3V
- Voltage between the input terminals ..... 0.3V to +10V
- 0V, VM1, VM2 pin ..... VDD30V to VDD+0.3V
- OUT1 to 5 pin ..... Vn–10.3V to VDD+0.3V
- DCHG, SEL, SDC, SOC pin, DRIVE, REG_IN pin ..... VSS0.3V to VDD+0.3V
- Storage temperature ..... –55°C to +125°C

(12) Recommended operating conditions

- Operating Temperature ..... –40°C to +85°C
- Supply Voltage ..... VSS 3.5V to 22.5V

Pin assignment

VSOP-24A

(Top view)

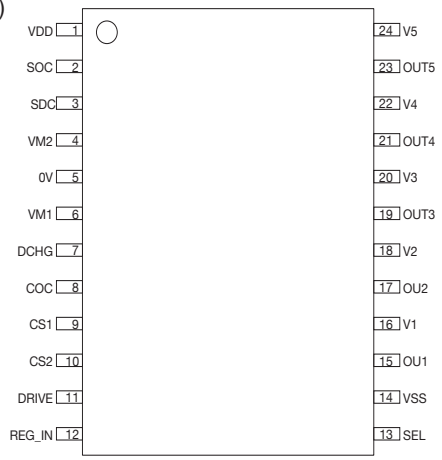

Pin no.	Symbol	Pin no.	Symbol
1	VDD	13	SEL
2	SOC	14	VSS
3	SDC	15	OUT1
4	VM2	16	V1
5	0V	17	OUT2
6	VM1	18	V2
7	DCHG	19	OUT3
8	COC	20	V3
9	CS1	21	OUT4
10	CS2	22	V4
11	DRIVE	23	OUT5
12	REG_IN	24	V5

Selection guide

Product name	Detection voltage / Release voltage									0V battery charge function *1	prptection mode of disconnection *2
	Overcharge detection voltage	Overcharge release voltage	Overdischarge detection voltage	Overdischarge release voltage	Discharging overcurrent detection voltage1	Discharging overcurrent detection voltage2	Short detection voltage	Charging overcurrent detection voltage	Cell balance detection voltage		
	V_{DET1}	V_{REL1}	V_{DET2}	V_{REL2}	V_{DET3-1}	V_{DET3-2}	V_{SHORT}	V_{DET4}	V_{DET_CB}		
	V	V	V	V	V	V	V	V	V		
MM3575A02WBE	4.250	4.175	2.800	2.900	0.100	0.200	0.400	-0.020	4.180	×	3
MM3575A08WBE	4.250	4.100	2.600	3.200	0.090	0.180	0.360	-0.030	4.180	×	3

*1 ○ : Permission × : Prohibition

*2 1 : Prohibition of charge 2 : Prohibition of discharge 3 : Prohibition of charge and discharge

Product name	Detection delay time / Release delay time													
	Overcharge detection delay time	Overcharge release delay time	Overdischarge detection delay time	Overdischarge release delay time	Discharging overcurrent detection delay time1	Discharging overcurrent detection delay time2	Discharging overcurrent release delay time2	Short detection delay time	Charging overcurrent detection delay time	Charging overcurrent release delay time	Disconnect detection delya time	Disconnect release delya time	Cell balance detection delay time	Cell balance release delay time
	t_{DET1}	t_{VREL1}	t_{DET2}	t_{VREL2}	$t_{VDET3-1}$	$t_{VDET3-2}$	t_{VREL3}	t_{SHORT}	t_{VDET4}	t_{VREL4}	t_{VDET5}	t_{VREL5}	t_{VDET_CB}	t_{VREL_CB}
	sec	msec	sec	msec	msec	msec	msec	μsec	msec	msec	msec	msec	msec	msec
MM3575A02WBE	1.0	100	1.0	4.0	10	2.0	4.0	200	1024	128	200	4096	256	8.0
MM3575A08WBE	1.0	100	2.0	4.0	1536	60.0	4.0	200	100	128	200	4096	256	8.0

Please inquire to us, if you request a rank other than the above.

Typical application circuit

5 cells protection circuit

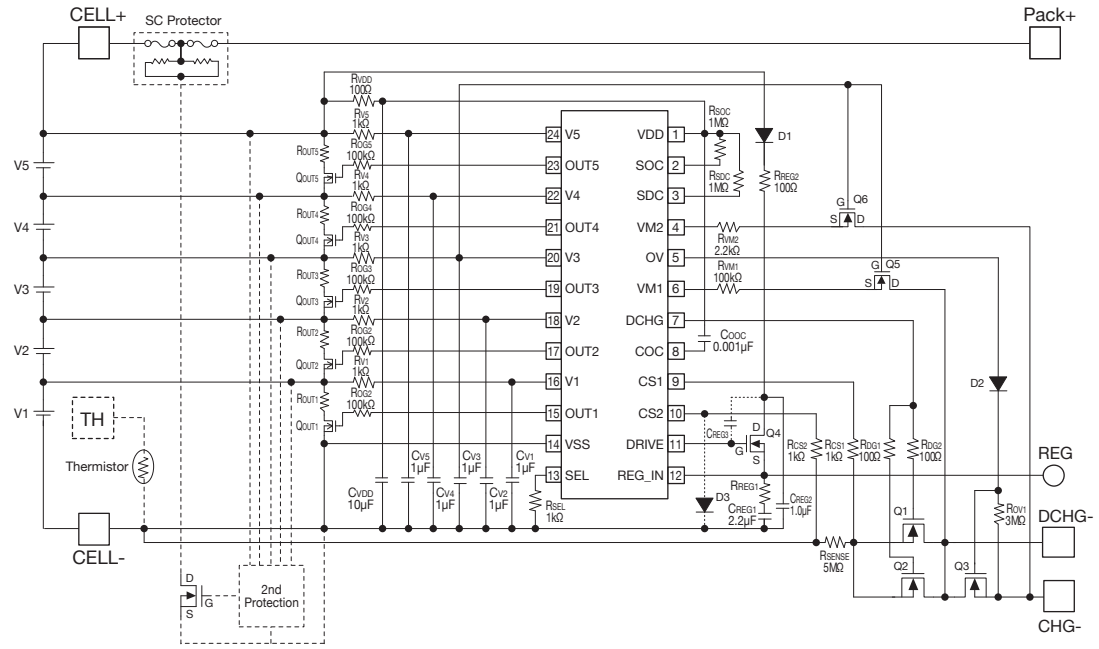

Explanation of external parts

Parts name	Roles of part
R_{VDD}, R_{V5} ,R_{V4} ,R_{V3}, R_{V2},R_{V1}	CR low-pass filter to stabilize a supply ripple of VDD pin, V5pin, V4pin, V3pin, V2pin, V1 pin
C_{VDD}, C_{V5}, C_{V4}, C_{V3}, C_{V2}, C_{V1}	
R_{OUT1}, R_{OUT2}, R_{OUT3}, R_{OUT4}, R_{OUT5}	Resistance of discharging during cell balance control
R_{SEL}, R_{CS1}, R_{CS2}, R_{VM1}, R_{VM2}	Resistor to protect terminal
R_{SDC}, R_{SOC}	Current limitation resistor (The voltage signal is converted into the current signal by)
C_{COC}	Capacitor to sets discharging overcurrent, charging overcurrent detection/ release dead time.
R_{SENSE}	Sense resistance to observe charging/discharging current
R_{DG1}, R_{DG2}	Resistor for preventing the gate destruction due to parasitic oscillation
R_{OV1}	Pulldown resistance of OV pin
R_{REG1}	Resistance of regulator for phase compensation
R_{REG2}	Resistance of current control when Q4 shorted out
C_{REG1}	Capacity of regulator for phase compensation
C_{REG2}	Capacitor to stabilize drain electric potential of Q4
D1	Diode for preventing backflow from regulator
D2	Diode for preventing voltage more than VDD pin voltage from applying to OV pin
Q_1, Q_2	Nch MOS FET to control discharging current
Q_3	Nch MOS FET to control charging current
Q_4	Power transistor of regulator
Q_5	FET for preventing voltage more than VDD pin voltage from applying to VM1 pin
Q_6	FET for preventing voltage more than VDD pin voltage from applying to VM2 pin
Q_{OUT1}, Q_{OUT2}, Q_{OUT3}, Q_{OUT4}, Q_{OUT5}	FET for controling discharging switch during cell balance control

Typical application circuit

10 cells protection circuit

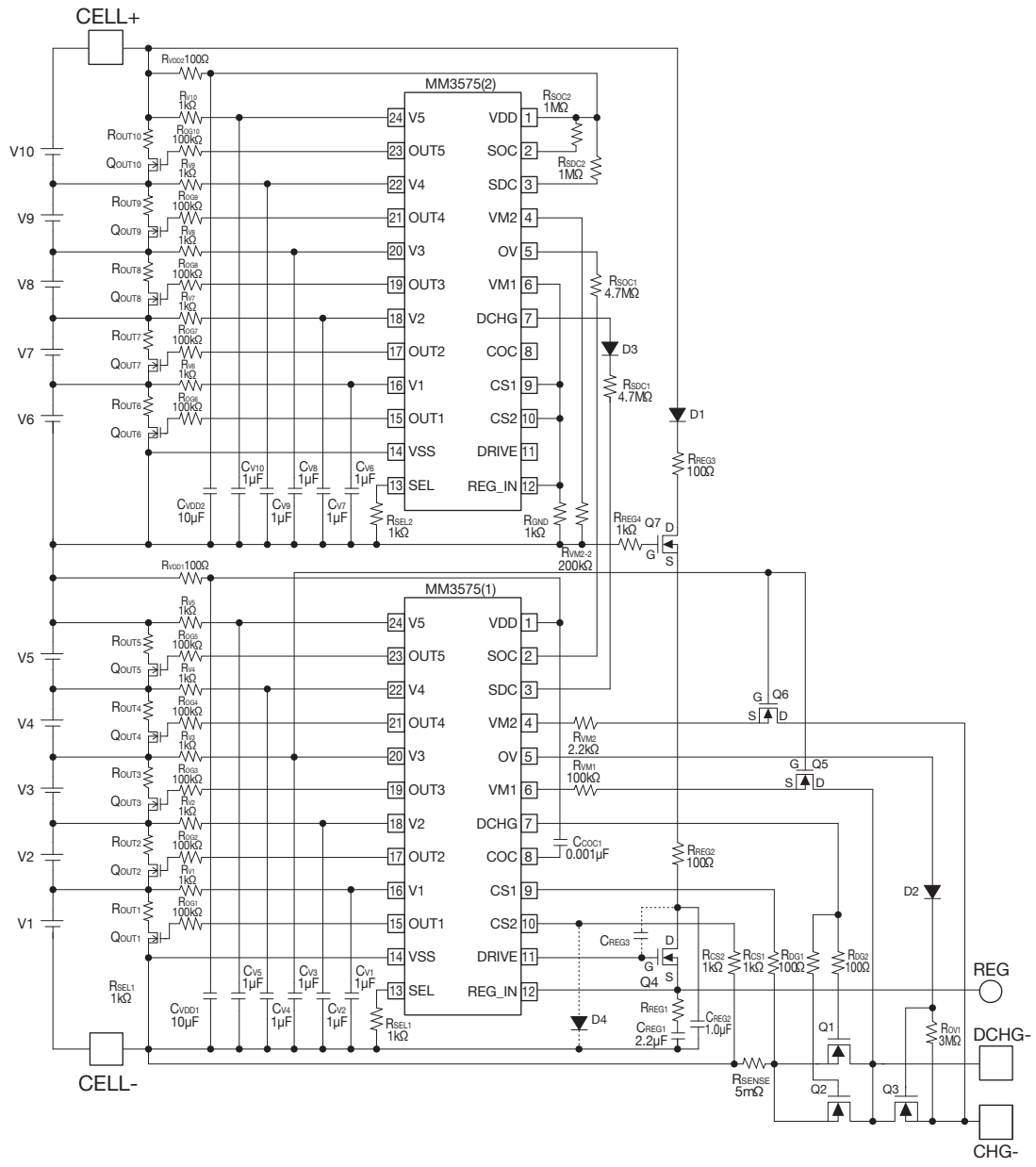

3 to 5 cells lithium–ion/lithium–polymer battery protection IC

MM3684 Series

Outline

The **MM3684** series are protection IC using high voltage CMOS process for overcharge, secondary overcharge, overdischarge, overcurrent and temperature protection of the rechargeable lithium–ion or lithium–polymer battery. The overcharge, overdischarge, discharging overcurrent, charging overcurrent, temperature of the rechargeable 3 to 5 cells Lithium-ion or lithium-polymer battery can be detected. The internal circuit of IC is composed by the voltage detector, the reference voltage source, delay time control circuit, and the logical circuit, etc.

Features

(Unless otherwise specified, Ta=25°C)

(1) Range and accuracy of detection/release voltage

- Overcharge detection voltage 1 (0V output) .....3.6V to 4.5V, 5mV steps ..... Accuracy ±25mV (Topr=±0°C to +50°C)
- Overcharge release voltage 1 (0V output) *1.....3.4V to 4.5V, 50mV steps ..... Accuracy ±50mV
- Overcharge detection voltage 2 (PF output) .....3.6V to 4.5V, 5mV steps ..... Accuracy ±25mV (Topr=±0°C to +50°C)
- Overdischarge detection voltage 1 .....2.0V to 3.0V, 50mV steps ..... Accuracy ±80mV
- Overdischarge detection voltage 2 .....2.0V to 3.0V, 50mV steps ..... Accuracy ±100mV
- Overdischarge release voltage *2 .....2.0V to 3.5V, 50mV steps ..... Accuracy ±100mV
- Discharging overcurrent detection voltage 1 .....30mV to 300mV, 5mV steps ..... Accuracy ±15%
- Discharging overcurrent detection voltage 2 .....Twice or 4 times of discharging overcurrent 1 *3..... Accuracy ±20%
- Short detection voltage.....4 or 8 times of discharging overcurrent 1 *3..... Accuracy ±100mV
- Charging overcurrent detect voltage .....–300mV to –20mV, 5mV steps..... Accuracy ±10mV

(2) Range of detection delay time

- Overcharge detection delay time 1 .....Setting by a capacitor of COV pin..... Accuracy ±50%
- Overcharge release delay time 1.....Setting by a capacitor of COV pin..... Accuracy ±50%
- Overcharge detection delay time 2 .....Setting by a capacitor of CPF pin. ..... Accuracy ±50%
- Overdischarge detection delay time .....Setting by a capacitor of CUV pin..... Accuracy ±50%
- Overdischarge release delay time.....Setting by a capacitor of CUV pin..... Accuracy ±50%
- Discharging overcurrent detection delay time 1 .....Setting by a capacitor of DCOC pin..... Accuracy ±50%
- Discharging overcurrent detection delay time 2 .....Setting by a capacitor of DCOC pin..... Accuracy ±50%
- Short detection delay time.....Selection from 100μs, 200μs, 300μs..... Accuracy –50%, +100%
- Discharging overcurrent release delay time.....Setting by a capacitor of DCOC pin..... Accuracy ±50%
- Charging overcurrent detection delay time.....Setting by a capacitor of CCOC pin..... Accuracy ±50%
- Charging overcurrent release delay time .....Setting by a capacitor of CCOC pin..... Accuracy ±50%
- Temperature protection detection ON time .....Setting by a capacitor of CIOT pin. ..... Accuracy ±50%
- Temperature protection detection OFF time.....Setting by a capacitor of CIOT pin. ..... Accuracy ±50%

*1 Overcharge release function is selectable from 3 options(voltage decrease, charger remove, load connect).

*2 Overdischarge release function is selectable from 3 options(voltage increase , charger remove, load connect).

*3 option

(3) The setting for three cell , for four cell , and for five cell protection can be set with the SEL1,2 pin.

(4) Threshold of over-discharge detection can be switched to over-discharge detection voltage 1, 2 at the DVSEL terminal.

(5) 0V battery charge function Selection from “Permission” or “Prohibition”

(6) Power save mode Built–in

- When all cells is detected overdischarge and charger disconnecting, IC becomes low consumption mode.

(7) Achieve low consumption by making the temperature detection for regulator and temperature detection circuit to intermittent operation

Features

(Unless otherwise specified, Ta=+25°C)

(8) Low current consumption

- VDD pin current consumption (Vcell=4.3V) ..... Typ. 15.0μA Max. 25.0μA
- VDD pin current consumption (Vcell=3.5V) ..... Typ. 10.0μA Max. 20.0μA
- VDD pin current consumption at power save (Vcell=1.8V) ..... Typ. 3.0μA, Max. 6.0μA
- V5 pin current consumption (Vcell=4.3V) ..... Typ. 1.0μA, Max. 2.0μA
- V5 pin current consumption (Vcell=3.5V) ..... Typ. 0.8μA, Max. 1.5μA
- V5 pin current consumption (Vcell=1.8V) ..... Max. 0.5μA

(9) Input cerrent

- V4 pin input current (Vcell=3.5V) ..... Max. 0.3μA
- V3 pin input current (Vcell=3.5V) ..... Max. 0.3μA
- V2 pin input current (Vcell=3.5V) ..... Max. 0.3μA
- V1 pin input current (Vcell=3.5V) ..... Max. 0.3μA

(10) Absolute maximum ratings

- VDD pin ..... VSS-0.3V to VSS+30V
- V5 pin ..... V4-0.3V to VDD+0.3V
- Voltage between the input terminals ..... -0.3V to +10V
- V–, 0V pin ..... VDD-30V to VDD+0.3V
- PF, DCHG, CS pin ..... VSS-0.3V to VDD+0.3V
- SEL1, SEL2, DVSEL pin ..... VSS-0.3V to VDD+0.3V
- CPF, COV, CUV pin ..... VSS-0.3V to VDD+0.3V
- CDOC, CCOC, CIOT pin ..... VSS-0.3V to VDD+0.3V
- REG, TH pin ..... VSS-0.3V to VDD+0.3V
- Storage temperature ..... -55°C to +125°C

(11) Recommended operating conditions

- Operating Temperature ..... -40°C to +85°C
- Supply Voltage ..... VSS 3.5V to 22.5V

Pin assignment

VSOP-24A

(Top view)

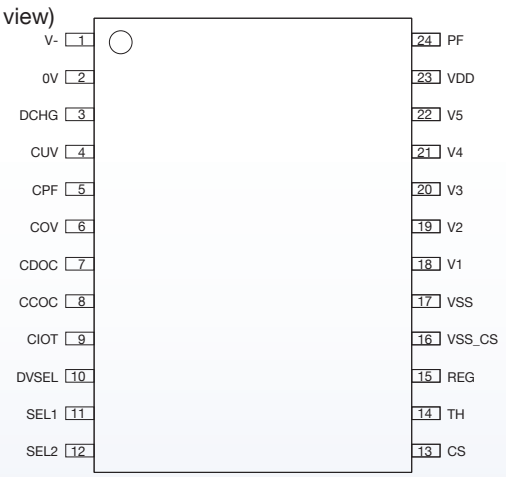

Pin no.	Symbol	Pin no.	Symbol
1	V-	13	CS
2	0V	14	TH
3	DCHG	15	REG
4	CUV	16	VSS_CS
5	CPF	17	VSS
6	COV	18	V1
7	CDOC	19	V2
8	CCOC	20	V3
9	CIOT	21	V4
10	DVSEL	22	V5
11	SEL1	23	VDD
12	SEL2	24	PF

Pin assignment

Pin No.	Pin Name	Function	
1	V-	Input terminal connected to charger negative voltage. Detected charger connection and load connection	
2	OV	Charge control output pin. Output type is N-Ch FET open drain. Normal mode → “High” Charge prohibited mode → “Low”	
3	DCHG	Discharge control output pin. Output type is CMOS. Normal mode → “High” Discharge prohibited mode → “Low”	
4	CUV	This pin is delay time setting of overdischarge detection and overdischarge release. If a capacitor is connected between CUV pin and VSS pin, overdischarge detection delay time setting becomes possible	
5	CPF	This pin is delay time setting of overcharge detection 2. If a capacitor is connected between CPF pin and VSS pin, overcharge detection 2 delay time setting becomes possible	
6	COV	This pin is delay time setting of overcharge detection 1 and overcharge release 1. If a capacitor is connected between COV pin and VSS pin, overcharge detection 1 delay time setting becomes possible	
7	CDOC	This pin is delay time setting of discharging overcurrent detection and discharging overcurrent release. If a capacitor is connected between CDOC pin and VSS pin, discharging overcurrent delay time setting becomes possible	
8	CCOC	This pin is delay time setting of charging overcurrent detection and charging overcurrent release. If a capacitor is connected between CCOC pin and VSS pin, charging overcurrent delay time setting becomes possible	
9	CIOT	This pin is delay time setting of intermittent operation of temperature detection. If a capacitor is connected between CIOT pin and VSS pin, temperature delay time setting becomes possible	
10	DVSEL	This pin is for changing function for overdischarge detection voltage 1,2 “High”→Overdischarge detection voltage 1 “Low”→Overdischarge detection voltage 2	
11	SEL1	This pin is for changing function for 3cell in series or 4cell in series , 5cell in series.	SEL1=“L”, SEL2=“L” → 5Cell in series
			SEL1=“H”, SEL2=“L” → 4Cell in series
12	SEL2		SEL1=“L”, SEL2=“H” → 3Cell in series
			SEL1=“H”, SEL2=“H” → test mode
13	CS	Input of overcurrent detection. Detected overcurrent by sense resistor between CS pin and VSS pin. Detection of an discharging overcurrent will output a High level from a DCHG pin. It protects from high current by these control	
14	TH	Temperature detection pin	
15	REG	The regulator output pin for a thermo sense resistor drive	
16	VSS_CS	Common pin of overcurrent detection circuit	
17	VSS	The input pin of the negative voltage of V1 cell. The input pin of the ground of IC	
18	V1	The input pin of the positive voltage of V1 cell, and the negative voltage of V2 cell	
19	V2	The input pin of the positive voltage of V2 cell, and the negative voltage of V3 cell	
20	V3	The input pin of the positive voltage of V3 cell, and the negative voltage of V4 cell	
21	V4	The input pin of the positive voltage of V4 cell, and the negative voltage of V5 cell	
22	V5	The input pin of the positive voltage of V5 cell	
23	VDD	The input terminal of the power supply of IC	
24	PF	Charge control output pin. Output type is CMOS. Normal mode → “Low” Charge prohibited mode → “High”	

Application circuit

5 cells protection circuit

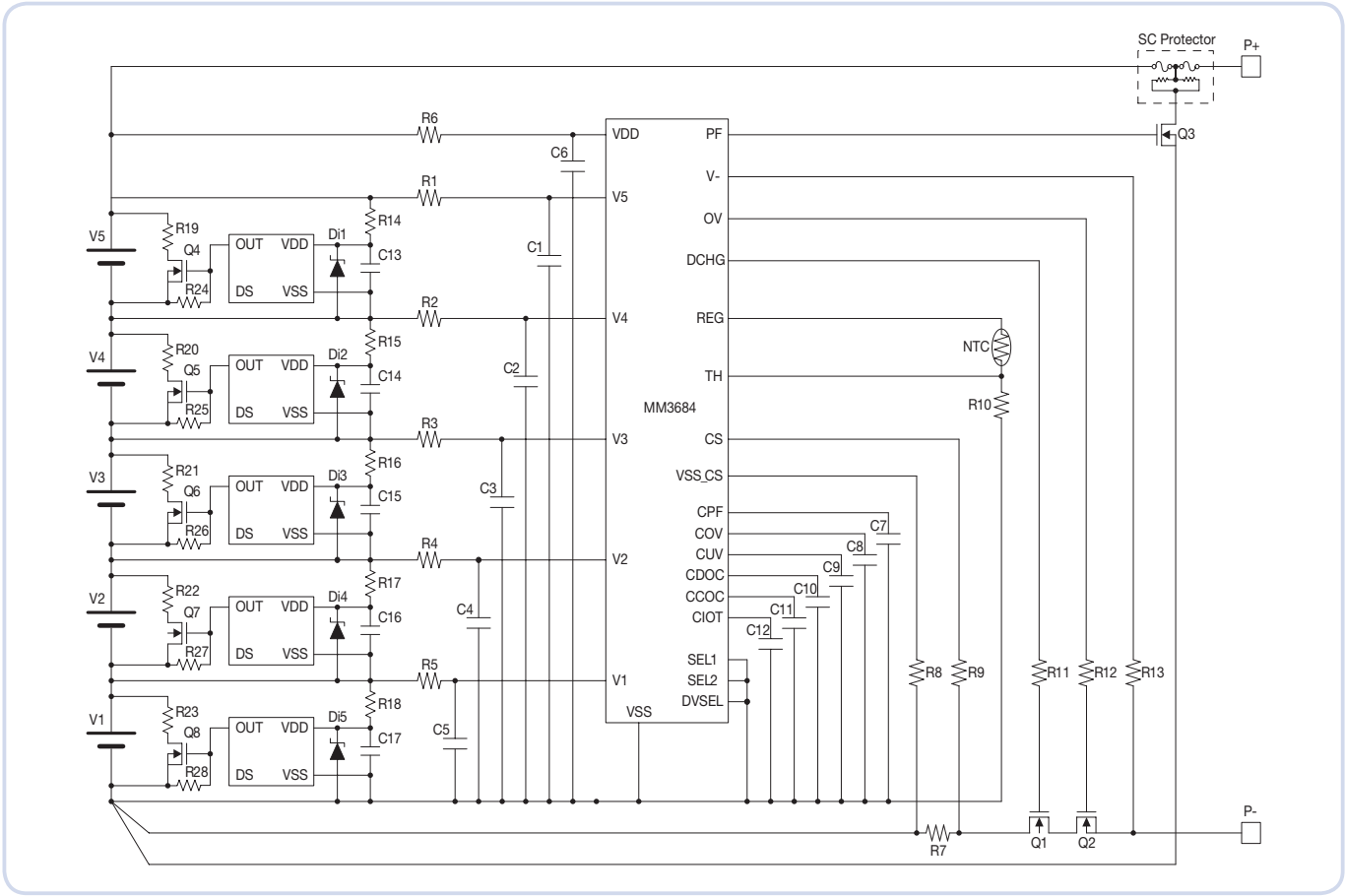

Explanation of external parts

Parts name	Roles of parts
R1, R2, R3, R4, R5, R6	CR low-pass filter to stabilize a supply ripple of VDD pin, V5 pin, V4 pin, V3 pin, V2 pin and V1 pin
C1, C2, C3, C4, C5, C6	
R8, R9, R13	Resistor to protect terminal
R11, R12	Resistor for preventing the gate destruction due to parasitic oscillation
R7	Sense resistance to observe charging/discharging current
NTC	NTC thermistor to observe to temperature
R10	The REG voltage is divided by NTC and RTH, and it's input to TH pin
C7	Capacitor to sets overcharge detection delay time 2
C8	Capacitor to sets overcharge detection/release delay time 1
C9	Capacitor to sets overdischarge detection/release delay time
C10	Capacitor to sets discharging overcurrent detection/release delay time
C11	Capacitor to sets charging overcurrent detection/release delay time
C12	Capacitor to set the ON / OFF time of the intermittent operation of the temperature protection
Q_1	Nch MOS FET to control discharging current
Q_2	Nch MOS FET to control charging current
Q_3	Nch MOS FET to fuse cut at secondary protection detection

3 to 5 cells lithium–ion/lithium–polymer battery protection IC

MM3694 Series

Outline

The MM3684 series are protection IC using high voltage CMOS process for overcharge, overdischarge, overcurrent and temperature protection of the rechargeable Lithium-ion or Lithium-polymer battery. The overcharge, overdischarge, discharging overcurrent, charging overcurrent, temperature of the rechargeable 3 to 5cell Lithium-ion or Lithium-polymer battery can be detected. The internal circuit of IC is composed by the voltage detector, the reference voltage source, delay time control circuit, and the logical circuit, etc.

Features

(Unless otherwise specified, Ta=25°C)

(1) Range and accuracy of detection/release voltage

- Overcharge detection voltage.....3.6V to 4.5V, 5mV steps ..... Accuracy ±25mV(Topr=±0 to +50°C)
- Overcharge release voltage ※1 .....3.4V to 4.5V, 50mV steps ..... Accuracy ±50mV
- Overdischarge detection voltage.....2.0V to 3.0V, 50mV steps ..... Accuracy ±80mV
- Overdischarge release voltage ※2.....2.0V to 3.5V, 50mV steps ..... Accuracy ±100mV
- Discharging overcurrent detection voltage 1 .....30mV to 300mV, 5mV steps ..... Accuracy ±15%
- Discharging overcurrent detection voltage 2 .....Twice or 4 times of discharging overcurrent 1 ※3..... Accuracy ±20%
- Short detection voltage.....4 or 8 times of discharging overcurrent 1 ※3..... Accuracy ±100mV
- Charging overcurrent detect voltage .....-300mV to -20mV, 5mV steps ..... Accuracy ±10mV

(2) Range of detection delay time

- Overcharge detection delay time.....Setting by a capacitor of COV pin..... Accuracy ±50%
- Overcharge release delay time.....Setting by a capacitor of COV pin..... Accuracy ±50%
- Overdischarge detection delay time .....Setting by a capacitor of CUV pin..... Accuracy ±50%
- Overdischarge release delay time.....Setting by a capacitor of CUV pin..... Accuracy ±50%
- Discharging overcurrent detection delay time 1 .....Setting by a capacitor of DCOC1 pin..... Accuracy ±50%
- Discharging overcurrent detection delay time 2 .....Setting by a capacitor of DCOC2 pin..... Accuracy ±50%
- Short detection delay time.....Selection from 100us, 200us, 300us..... Accuracy -50%, +100%
- Discharging overcurrent release delay time.....Setting by a capacitor of DCOC1 pin..... Accuracy ±50%
- Charging overcurrent detection delay time.....Setting by a capacitor of CCOC pin..... Accuracy ±50%
- Charging overcurrent release delay time .....Setting by a capacitor of CCOC pin..... Accuracy ±50%
- Temperature protection detection ON time .....Setting by a capacitor of CIOT pin..... Accuracy ±50%
- Temperature protection detection OFF time.....Setting by a capacitor of CIOT pin..... Accuracy ±50%

*1 Overcharge release function is selectable from 3 options(voltage decrease, charger remove, load connect).

*2 Overdischarge release function is selectable from 3 options(voltage increase , charger remove, load connect).

*3 option

(3) The setting for three cell , for four cell , and for five cell protection can be set with the SEL1,2 pin.

(4) 0V battery charge function Selection from "Prohibition" or "Permission"

(5) Power save mode built-in

- When all cells is detected overdischarge and charger disconnecting, IC becomes low consumption mode.

(6) Achieve low consumption by making the temperature detection for regulator and temperature detection circuit to intermittent operation

Features

(Unless otherwise specified, Ta=+25°C)

(7) Low current consumption

- VDD pin current consumption(Vcell=4.3V) ..... Typ. 15.0uA Max. 25.0uA
- VDD pin current consumption(Vcell=3.5V) ..... Typ. 10.0uA Max. 20.0uA
- VDD pin current consumption at power save (Vcell=1.8V) ..... Typ. 3.0uA, Max. 6.0uA
- V5 pin current consumption (Vcell=4.3V) ..... Typ. 1.0uA, Max. 2.0uA
- V5 pin current consumption (Vcell=3.5V) ..... Typ. 0.8uA, Max. 1.5uA
- V5 pin current consumption (Vcell=1.8V) ..... Max. 0.5uA

(8) Input current

- V4 pin input current (Vcell=3.5V) ..... Max. 0.3uA
- V3 pin input current (Vcell=3.5V) ..... Max. 0.3uA
- V2 pin input current (Vcell=3.5V) ..... Max. 0.3uA
- V1 pin input current (Vcell=3.5V) ..... Max. 0.3uA

(9) Absolute maximum ratings

- VDD pin ..... VSS-0.3V to VSS+30V
- V5 pin ..... V4-0.3V to VDD+0.3V
- Voltage between the input terminals ..... -0.3V to +10V
- V-, OV pin ..... VDD-30V to VDD+0.3V
- DCHG, CS pin ..... VSS-0.3V to VDD+0.3V
- SEL1, SEL2 pin ..... VSS-0.3V to VDD+0.3V
- COV, CUV pin ..... VSS-0.3V to VDD+0.3V
- CDOC1, CDOC2, CCOC, CIOT pin ..... VSS-0.3V to VDD+0.3V
- REG, TH pin ..... VSS-0.3V to VDD+0.3V
- Storage temperature ..... -55 to +125°C

(10) Recommended operating conditions

- Operating Temperature ..... -40 to +85°C
- Supply Voltage ..... VSS+3.5V to +22.5V

Pin assignment

VSOP-24A

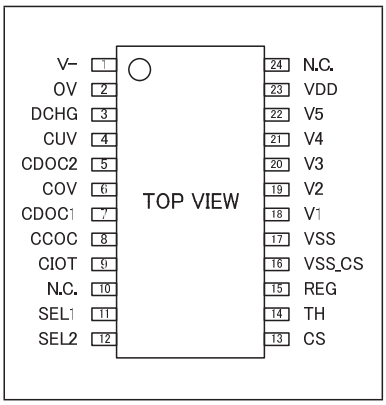

Pin No.	Pin Name	Function	
1	V-	Input terminal connected to charger negative voltage. Detected charger connection and load connection."	
2	OV	Charge control output pin. Output type is N-Ch FET open drain. Normal mode → "High" → Charge prohibited mode → "Low"	
3	DCHG	Discharge control output pin. Output type is CMOS. Normal mode → "High" Discharge prohibited mode → "Low"	
4	CUV	This pin is delay time setting of overdischarge detection and overdischarge release. If a capacitor is connected between CUV pin and VSS pin , overdischarge detection delay time setting becomes possible.	
5	CDOC2	This pin is delay time setting of discharging overcurrent detection 2. If acapacitor is connected between CDOC2 pin and VSS pin , discharging overcurrent delay time setting becomes possible.	
6	COV	This pin is delay time setting of overcharge detection 1 and overcharge release 1. If a capacitor is connected between COV pin and VSS pin , overcharge detection 1 delay time setting becomes possible.	
7	CDOC1	This pin is delay time setting of discharging overcurrent detection1 and discharging overcurrent release. If a capacitor is connected between CDOC pin and VSS pin , discharging overcurrent delay time setting becomes possible.	
8	CCOC	This pin is delay time setting of charging overcurrent detection and charging overcurrent release. If a capacitor is connected between CCOC pin and VSS pin , charging overcurrent delay time setting becomes possible.	
9	CIOT	This pin is delay time setting of intermittent operation of temperature detection. If a capacitor is connected between CIOT pin and VSS pin , temperature delay time setting becomes possible.	
10	N.C.	No Connection.	
11	SEL1	This pin is for changing function for 3cell in series or 4cell in series , 5cell in series.	SEL1="L", SEL2="L" → 5Cell in series
			SEL1="H", SEL2="L" → 4Cell in series
12	SEL2		SSEL1="L", SEL2="H" → 3Cell in series
			SEL1="H", SEL2="H" → test mode
13	CS	nput of overcurrent detection. Detected overcurrent by sense resistor between CS pin and VSS pin. Detection of an discharging overcurrent will output a High level from a DCHG pin. It protects from high current by these control	
14	TH	Temperature detection pin.	
15	REG	The regulator output pin for a thermo sense resistor drive.	
16	VSS_CS	Common pin of overcurrent detection circuit.	
17	VSS	The input pin of the negative voltage of V1 cell. The input pin of the ground of IC.	
18	V1	The input pin of the positive voltage of V1 cell, and the negative voltage of V2 cell.	
19	V2	The input pin of the positive voltage of V2 cell, and the negative voltage of V3 cell .	
20	V3	The input pin of the positive voltage of V3 cell, and the negative voltage of V4 cell .	
21	V4	The input pin of the positive voltage of V4 cell, and the negative voltage of V5 cell .	
22	V5	The input pin of the positive voltage of V5 cell .	
23	VDD	The input terminal of the power supply of IC.	
24	N.C.	No Connection.	

Application circuit

5 cells protection circuit

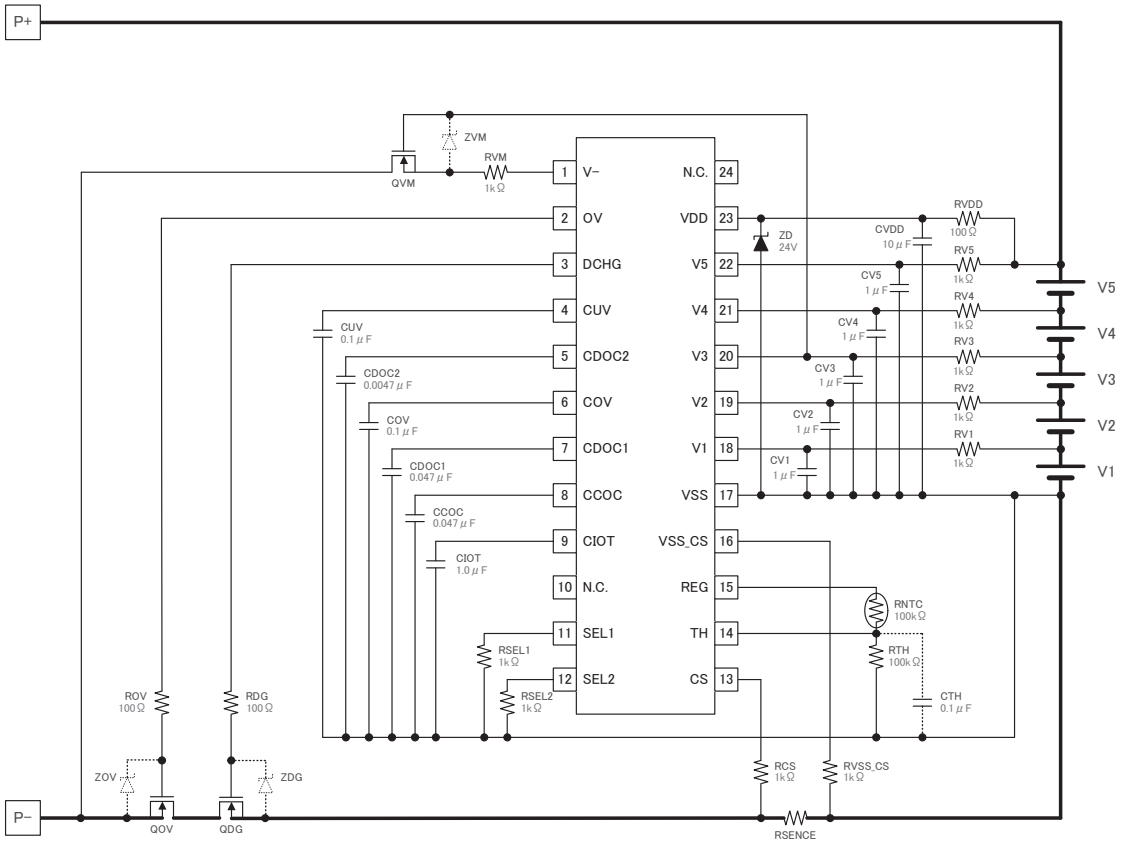

Explanation of external parts

Parts name	Roles of parts
RV1, RV2, RV3, RV4, RV5, RVDD	CR low-pass filter to stabilize a supply ripple of VDD pin, V5 pin, V4 pin, V3 pin, V2 pin and V1 pin.
CV1, CV2, CV3, CV4, CV5, CVDD	
RCS, RVSS_CS, RVM, RSEL1/2	Resistor to protect terminal.
ROV, RDG	Resistor for preventing the gate destruction due to parasitic oscillation.
RSENCE	Sense resistance to observe charging/discharging current.
RNTC	NTC thermistor to observe to temperature.
RTH	The REG voltage is divided by NTC and RTH, and it's input to TH pin.
COV	Capacitor to sets overcharge detection/release delay time 1.
CUV	Capacitor to sets overdischarge detection/release delay time.
CDOC1	Capacitor to sets discharging overcurrent detection 1/release delay time.
CDOC2	Capacitor to sets discharging overcurrent detection 2 delay time.
CCOC	Capacitor to sets charging overcurrent detection/release delay time.
CIOT	Capacitor to set the ON / OFF time of the intermittent operation of the temperature protection.
QDG	Nch MOS FET to control discharging current.
QOV	Nch MOS FET to control charging current.
QVM	FET to prevent voltage input to V-pin from rising more than voltage of VDD pin.
ZD	Zener diode to prevent destruction of IC by surge voltage.

4 to 7 cells lithium–ion/lithium–polymer battery protection IC

MM3877 Series

Outline

The MM3787 series are protection IC using high voltage CMOS process for overcharge, overdischarge, overcurrent, temperature protection, and cell balance control of the rechargeable Lithium-ion or Lithium-polymer battery.
The overcharge, overdischarge, discharging overcurrent, charging overcurrent, and short of the rechargeable 4-7cells lithium-ion or lithium-polymer battery can detected. In addition, the temperature detection by external NTC thermistor and cell balance control are also possible. The internal circuit of IC is composed by the voltage detector, the reference voltage source, oscillator, counter circuit and the logical circuit, etc. A stacking configuration using multiple ICs is also possible, so a low-cost, space-saving protection circuit can be configured for applications with more than 7 cells.

Features

(Unless otherwise specified, Ta=25°C)

(1) Range and accuracy of detection/release voltage/temperature(Unless otherwise specified, Topr=+25°C)

- Overcharge detection voltage.....3.6V to 4.5V, 5mV step ..... ±20mV
- Overcharge release voltage *1 .....3.4V to 4.5V, 50mV step ..... ±30mV
- Overdischarge detection voltage.....2.0V to 3.0V, 50mV step ..... ±50mV
- Overdischarge release voltage *2 .....2.0V to 3.5V, 50mV step ..... ±100mV
- Cell balance detection voltage.....3.6V to 4.5V, 5mV step ..... ±25mV
- Discharging overcurrent detection voltage1 .....30mV to 300mV, 5mV step ..... ±10% (Min.±5mV)
- Discharging overcurrent detection voltage2 .....60mV to 600mV, 6mV step ..... ±15% (Min.±15mV)
- Short detection voltage.....200mV to 1.0V, 50mV step ..... ±20%
- Charging overcurrent detection voltage.....-300mV to -20mV, 5mV step ..... ±10% (Min.±5mV)
- High/low temp protection detection temperature *3.....-40°C to 75°C , 5°C step..... ±5°C

(2) Range and accuracy of various delay time

- Overcharge detection delay time.....100ms to 2.048s..... *4
- Overdischarge detection delay time .....100ms to 2.048s..... *4
- Cell balance detection delay time.....100ms to 4.096s..... *4
- Discharging overcurrent detection delay time1 .....100ms to 2560ms, COC=0.01uF ..... ±25%
- Discharging overcurrent detection delay time2 .....10ms to 640ms, COC=0.01uF ..... ±25%
- Short detection delay time.....200us to 500us, 50us step..... ±50%
- Discharging overcurrent release delay time.....4ms to 2.048s..... ±25%
- Charging overcurrent detection delay time.....4ms to 2.048s..... ±25%
- Charging overcurrent release delay time .....4ms to 2.048s..... ±25%
- Temperature protection detection delay time .....4ms to 2.048s..... ±25%
- Temperature protection release delay time.....4ms to 2.048s..... ±25%

*1 Overcharge release function is selectable from 2 options(voltage decrease, charger remove).
*2 Overdischarge release function is selectable from 2 options(voltage increase , load remove).
*3 High/Low temp protection detection temperature accuracy is guaranteed by design.
Detection accuracy may change with the specification of the used NTC thermistor.
*4 Voltage monitoring of overcharge protection, overdischarge protection and cell balance control measures the voltage of each cell in turn at [Cell voltage monitoring period(=Typ.71.75ms)].
For that reason, each detection time and release time fluctuates within the range of Spec depending on the difference between the timing at which the voltage changes and the timing at which the voltage changes and the timing at which the voltage in monitored.

(3) SEL pin can be set from 4cell protection to 7 cell protection.

(4) Power save function
After overdischarge detection, if the charger is not connected and any cell voltage is below the overdischarge release voltage and the power save delay time has elapsed, the IC enters power save mode.
In power save mode, the IC stops unnecessary circuits and reduces current consumption.

Features

(Unless otherwise specified, Ta=+25°C)

(5) Cascade connection
By cascading two ICs, it is possible to protect batteries of 8 cells or more.
By connecting the OV pin and DCHG pin of the high side IC to the SOC pin and SDC pin of the low side IC respectively, it is possible to transmit charge/discharge control signal from high side IC to low side IC and the charge/load connection signal from the low side IC to high side IC. Various functions can be supported without increasing the number of external circuits in cascade connection.

(6) 0V battery charge functionSelection from "Permission" or " Inhibition"

(7) Low current consumption
- Ave. current consumption (Normal mode) ..... Typ. 20.0uA Max. 30.0uA (VCELL=3.5V)
- Current consumption (power save mode)..... Typ. 1.0uA Max. 1.5uA (VCELL=1.8V)

(8) Input current
- V7 pin input current (Normal mode)..... Typ. 0.2uA Max. 0.5uA (VCELL=3.5V)
- Vn pin input current (Normal mode)..... n=1~6Min. -0.3uA Max. +0.3uA (VCELL=3.5V)
- Vn pin input current (Cell balance mode)..... n=1~7Min. 3.0mA Typ. 6.0mA (VCELL=4.5V)

(9) Absolute maximum ratings
- Supply voltage (VDD pin) ..... VSS-0.3V to VSS+42V
- V7 pin supply voltage..... VSS-0.3 to VDD+0.3
- Voltage between cell input pins ..... -0.3V to +6.0V
- SEL pin, COC pin input supply voltage ..... VSS-0.3 to VDD+0.3
- PD pin supply voltage..... VSS-0.3 to VDD+0.3
- TH pin, CS pin supply voltage ..... VSS-0.3 to VDD+0.3
- DCHG pin supply voltage ..... VDD-42.0 to VDD+10V
- OV pin supply voltage..... VDD-42.0 to VDD+0.3V
- VLM pin, VCM pin supply voltage..... VDD-42V to VDD+0.3V
- SOC pin, SDC pin supply voltage..... VSS-0.3V to VDD+0.3V
- Storage temperature..... -55 to +125°C
- Power Dissipation 340mW

(10) Recommended operating conditions
- Operating temperature..... -40 to +85°C
- Supply voltage ..... VSS+3.5V to +31.5V

Pin assignment

VSOP-20A

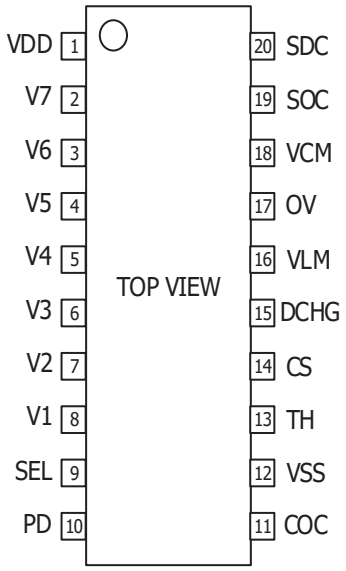

Pin No.	Function
1	The input pin of the power supply of IC.
2	The input pin of the positive voltage of V7 cell and the output pin of cell balance control of V7 cell.
3	The input pin of the positive voltage of V6, and the negative voltage of V7 cell.And the output pin of cell balance control of V6 cell.
4	The input pin of the positive voltage of V5, and the negative voltage of V6 cell.And the output pin of cell balance control of V5 cell.
5	The input pin of the positive voltage of V4, and the negative voltage of V5 cell.And the output pin of cell balance control of V4 cell.
6	The input pin of the positive voltage of V3, and the negative voltage of V4 cell.And the output pin of cell balance control of V3 cell.
7	The input pin of the positive voltage of V2, and the negative voltage of V3 cell.And the output pin of cell balance control of V2 cell.
8	The input pin of the positive voltage of V1, and the negative voltage of V2 cell.And the output pin of cell balance control of V1 cell.
9	This input pin is changing function for 4cell, 5cell, 6cell, and 7cell in series.SEL=VDD : 7cell mode, SEL=V4 : 6cell mode, SEL=V2 : 5cell mode, SEL=VSS=4cell mode
10	The output pin for controlling pull-down of load negative voltage.
11	This input pin sets delay time of discharging overcurrent detection, and selects mode.
12	The input pin of the negative voltage of V1 cell. The input pin the ground of IC.
13	Temperature detection pin.
14	The input pin of over current detection.
15	When charge/discharge control FET drive mode, DCHG pin is discharge control output pin.When cascade mode, DCHG pin is discharge control output pin and load connect signal input pin.
16	The input pin connected to load negative voltage.
17	When charge/discharge control FET drive mode, OV pin is charge control output pin.When cascade mode, OV pin is charge control output pin and charger connect signal input pin.
18	The input pin connected to charger negative voltage.
19	The input pin for charge control. And, charger connect signal output pin.
20	The input pin for discharge control. And, load connect signal output pin.

Selection guide

Product name	Detection voltage / Release voltage									
	Overcharge detection voltage	Overcharge release voltage	Overdischarge detection voltage	Overdischarge release voltage	Cell balance detection voltage	Cell balance hysteresis voltage	Discharging overcurrent detection voltage 1	Discharging overcurrent detection voltage 2	Short detection voltage	Charging overcurrent detection voltage
	Vovp	Vovr	Vuvp	Vuvr	Vcbd	Vcbr	Vdocp1	Vdocp2	Vscp	Vcocp
	V	V	V	V	V	V	V	V	V	V
MM3877C05WBE	4.250	4.100	2.750	3.000	4.200	0.010	0.100	0.200	0.350	-0.030
MM3877C06WBE	3.700	3.550	2.300	2.700	3.550	0.010	0.100	0.200	0.350	-0.030

Product name	Temperature protection detection / release temperature									
	High temp protection detection temperature for discharging	High temp protection release temperature for discharging	High temp protection detection temperature for charging	High temp protection release temperature for charging	Low temp protection detection temperature for charging	Low temp protection release temperature for charging	Low temp protection detection temperature for discharging	Low temp protection release temperature for discharging	Temp protection monitoring time	Temp protection monitoring period
	Tthp1	Tthr1	Tthp2	Tthr2	Tthp3	Tthr3	Tthp4	Tthr4	tthm	ttmon
	°C	°C	°C	°C	°C	°C	°C	°C	msec	sec
MM3877C05WBE	75	65	50	40	0	10	-	-	16.0	2.68
MM3877C06WBE	75	65	50	40	0	10	-	-	16.0	2.68

Please inquire to us, if you request a rank other than the above.

Selection guide

Product name	Detection delay time / Release delay time										
	Overcharge detection delay time	Overdischarge detection delay time	Cell balance detection delay time	Discharging overcurrent detection delay time 1 (at COC = 0.01uF)	Discharging overcurrent detection delay time 2 (at COC = 0.01uF)	Discharging overcurrent release delay time	Short detection delay time	Changing overcurrent detection delay time	Charging overcurrent release delay time	Temp protection detection delay time	Temp protection release delay tim
	tovp	tuvp	tcbd	tdocp1	tdocp2	tdocr	tscp	tcocp	tcocr	tthp	tthr
	sec	sec	sec	msec	msec	msec	usec	msec	msec	sec	msec
MM3877C05WBE	1.024	1.024	0.256	100	10	1024	350	1024	128	2.048	100
MM3877C06WBE	1.024	1.024	0.256	100	10	1024	350	1024	128	2.048	100

Product name	Option function							
	Cell balance function	Overcharge release function	Overdischarge hysteresis cancel function	Overdischarge release function	Discharging overcurrent release function	Charging overcurrent release function	Temp protection release function	0V battery charge function
MM3877C05WBE	Enable	Latch	Enable	Latch	Load remove	Charger remove	Temp	Prohibition
MM3877C06WBE	Enable	Latch	Enable	Latch	Load remove	Charger remove	Temp	Prohibition

Please inquire to us, if you request a rank other than the above.

Application circuit

1) 13cells protection circuit (Current pathway : common)

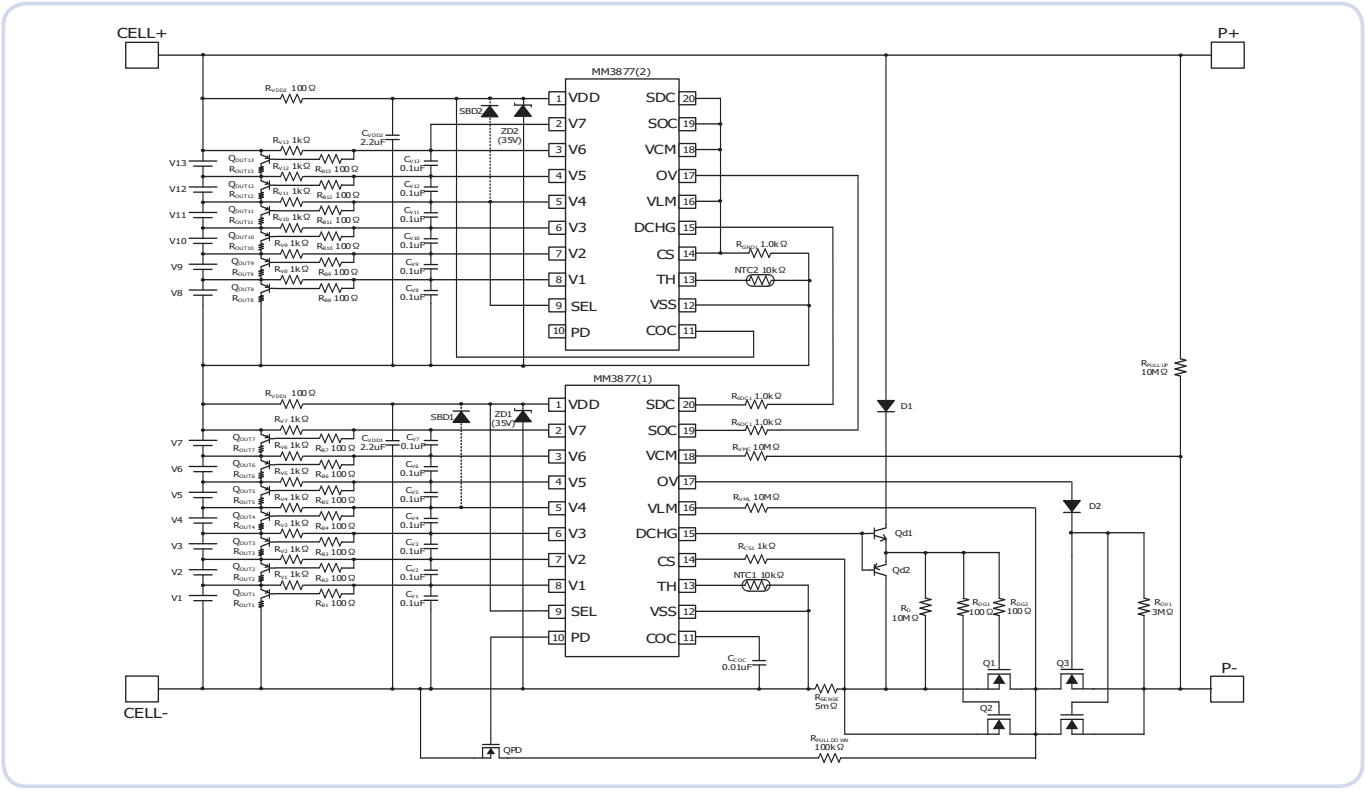

2) Explanation of external parts : 13cells protection circuit

Parts name	Roles of parts
R_{VDD1},R_{VDD2},R_{V1}-R_{V13}	CR low-pass filter to stabilize a supply ripple of VDD pin, V1 to V7 pins. This resistor is used to drive an external pnp transistor during cell balance control."
C_{VDD1},C_{VDD2},C_{V1}-C_{V13}	
ZD1,ZD2	Zener diode to prevent destruction of IC by surge voltage and motor back electromotive voltage.
SBD1,SBD2	This is a Schottky barrier diode to prevent the V4 pin voltage from exceeding VDD.
R_{B1}-R_{B13}	This resistor is the base resistor of the pnp transistor for cell balance control.
R_{OUT1}-R_{OUT13}	This resistor is the discharge resistor curing cell balance control.
Q_{OUT1}-Q_{OUT13}	PNP transistor for cell balance control.
R_{CS1},R_{VCM},R_{VLM},R_{SOC},R_{SDC},R_{GND1}	Resistor to protect terminal.
Q_{PD}	Nch MOS FET that controls the pull-down resistor when monitoring the load connection.
$R_{PULLDOWN}$	This is pull-down resistor for monitoring the load connection.
R_{SENSE}	Sense resistor to monitor charging/discharging current.
C_{COC}	Capacitor to sets discharging overcurrent detection delay time.
NTC1,NTC2	NTC thermistor to monitor to temperature.
Q_{DG1},Q_{DG2},R_D,D1	Parts for driving the discharge control FET.
R_{OV1}	Pull-down resistor to turn off the charge control FET.
R_{DG1},R_{DG2}	Resistors for preventing the gate destruction due to parasitic oscillation.
D2	This diode prevents current from flowing back to the OV pin.
Q1,Q2	Nch MOS FET to control discharging current.
Q3,Q4	Nch MOS FET to control charging current.
R_{PULLUP}	This is pull-up resistor for monitoring the charger connection.

Voltage monitor IC for lithim–ion battery secondary protect

MM3734 Series

Outline

The **MM3734** series are voltage monitor ICs for rechargeable Lithium-ion or Lithium–polymer batteries secondary protection, using a high voltage CMOS process. 1–cell lithium-ion or lithium-polymer battery can be detected overcharge state. Internal circuit is composed of voltage detectors, reference voltage sources, an oscillator, a counter circuit and logical circuits.

Features

(Unless otherwise specified, Ta=25°C)

(1) High-accuracy detection voltage

- Detection voltage.....4.0V to 4.5V, 5mV steps
  Accuracy±20mV, Accuracy±25mV (Topr=–5°C to +60°C)
- Hysteresis voltage.....0V to 1.0V, 50mV steps.
  However, “Detection voltage-Hysteresis voltage<4.0V” is disabled.

(2) Range of Detection delay time

- Detection delay time .....Selectable from 0.25s, 1.02s, 2.048s, 4.096s.

(3) Low current consumption

- Normal mode .....Typ. 1.5μA, Max. 3.0μA
- Stand-by mode .....Max. 0.8μA

(4) Absolute maximum ratings

- VDD pin.....VSS–0.3V to +12V
- OUT pin.....VDD–0.3V to VDD+0.3V
- DS pin .....VSS–0.3V to VDD+0.3V
- Storage temperature.....–55°C to +125°C
- Operation temperature.....Í40°C to +85°C

Pin assignment

SON-6C

(Top view)

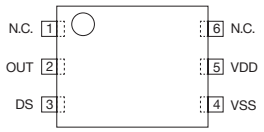

Pin No.	Symbol	Function
1	N.C.	Non connection
2	OUT	Output of detecting voltage. Output type is CMOS
3	DS	Delay shorten terminal
4	VSS	VSS terminal. Connected to ground
5	VDD	VDD terminal. Connected to IC substrait
6	N.C.	Non connection

PRODUCT LINEUP

PRODUCT	Package	Detection voltage	Release voltage	Detection delay time	Release delay time
		Vdet	Vrel	tVdet	tVrel
MM3734A01YRE	SON-6C	4.500V	4.150V	2.048s	16ms

Please inquire to us, if you request a rank other than the above.

TYPICAL APPLICATION CIRCUIT

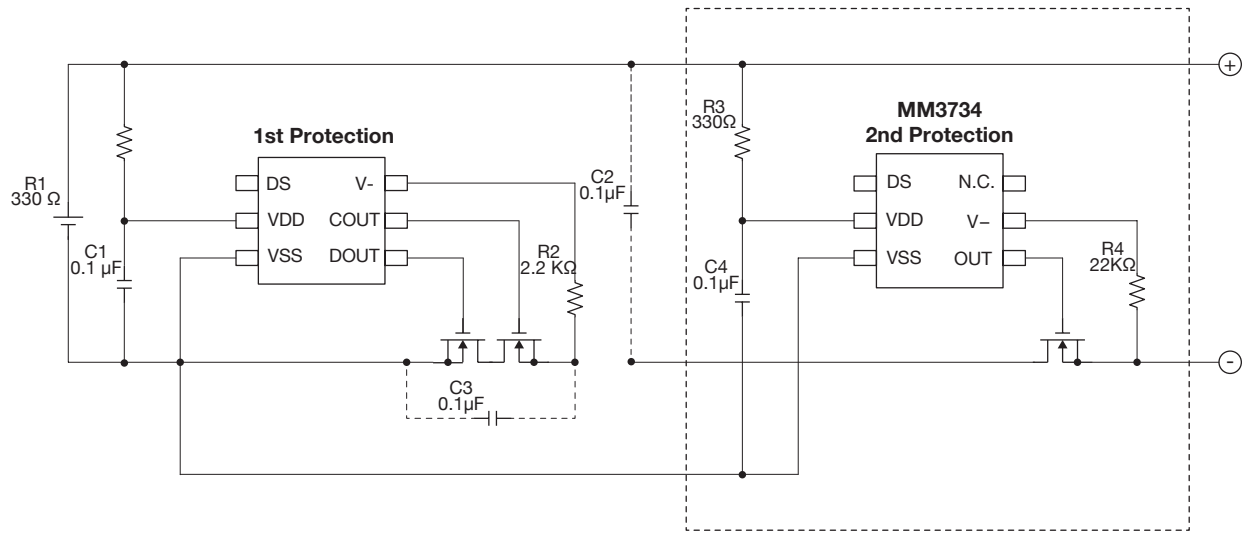

- R3 and C4 stabilize a supply voltage ripple. However, the detection voltage rises by the current of penetration in IC of the voltage detection when R3 is enlarged, and the value of R3 is adjusted to 1KΩ or less. Moreover, adjust the value of C4 to 0.01μF or more to do the stability operation, please.

2 to 4 cells lithium–ion/lithium–polymer battery secondary protection IC

MM3508A Series

Outline

MM3508A series are double protection IC for 2 to 4 serial cells lithium–ion / lithium–polymer battery for secondary protection IC. Since it has a built–in timer circuit, it is able to set the detection delay time. It can hold the output of detection for a certain period by latch function. Therefore, it can maintain Fuse cutting time. In addition, it can lower the cell voltage when it is high after Fuse cutting.

Features

(Unless otherwise specified, Ta=25°C)

(1) Range and accuracy of overcharge detection/hysteresis voltage
- Overcharge detection voltage4.0V to 4.5V, 5mV step ..... Accuracy±20mV (Topr=0 to +50°C)
- Overcharge hysteresis voltage.....50mV to 500mV, 50mV step ..... Accuracy±100mV

(2) Range of detection delay time
- Overcharge detection delay time.....1ms to $(1ms\times2^{n1})+(1ms\times2^{n2})$

*n1 and n2 can select two arbitrary integers between 0 to 13. (However n1≠n2)

(3) Low current consumption
- Typ. 3.5μA, Max. 5.0μA (Vcell=4.0V)
- Typ. 0.15μA, Max. 0.30μA (Vcell=2.3V)

(4) Absolute maximum ratings
- VDD pin..... VSS–0.3V to VSS+28V
- 0V pin..... VSS–0.3V to VDD+0.3V
- Storage temperature..... –55°C to +125°C
- Operation temperature..... –40°C to +110°C

(5) The FUSE cutting signal is the output between period of time. And the CELL voltage is released by electric discharge resistance of "60KΩ(Typ.)" after FUSE was cut.
And CELL stops an electric discharge if the CELL voltage becomes less than the electric discharge release voltage.

Pin assignment

SOT-26A

(Top view)

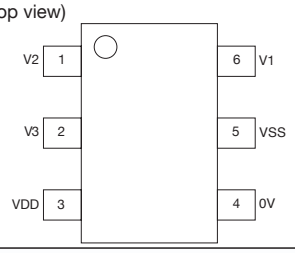

Pin no.	Symbol	Function
1	V2	The input terminal of the positive voltage of V2 cell, and the negative voltage of V3 cell
2	V3	The input terminal of the positive voltage of V3 cell, and the negative voltage of V4 cell
3	VDD	The input terminal of the power supply of IC, and the positive voltage of V4 cell
4	0V	Output of over charge detection (Output type is CMOS)
5	VSS	The input terminal of the ground of IC, and the negative voltage of V1 cell
6	V1	The input terminal of the positive voltage of V1 cell, and the negative voltage of V2 cell

SSON-6A

(Top view)

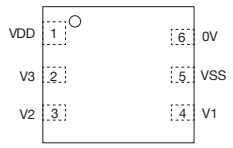

Pin no.	Symbol	Function
1	VDD	The input terminal of the power supply of IC, and the positive voltage of V4 cell
2	V3	The input terminal of the positive voltage of V3 cell, and the negative voltage of V4 cell
3	V2	The input terminal of the positive voltage of V2 cell, and the negative voltage of V3 cell
4	V1	The input terminal of the positive voltage of V1 cell, and the negative voltage of V2 cell
5	VSS	The input terminal of the ground of IC, and the negative voltage of V1 cell
6	0V	Output of over charge detection (Output type is CMOS)

1 SECONDARY BATTERY ICs

2 to 4 cells lithium-ion/lithium-polymer battery secondary protection IC

MM3508B Series

Outline

MM3508B series are double protection IC for 2 to 4 serial cells lithium-ion / lithium-polymer secondary battery. It detects battery voltage for each cell.

Each of these IC composed of four voltage detectors, reference voltage sources, oscillator, counter circuit and logical circuits.

Features

(Unless otherwise specified, Ta=25°C)

(1) Range and accuracy of overcharge detection/hysteresis voltage

- Overcharge detection voltage.....4.0V to 4.5V, 5mV step ..... Accuracy±20mV (Topr=0 to +50°C)
- Overcharge hysteresis voltage.....50mV to 500mV, 50mV step ..... Accuracy±100mV

(2) Range of detection delay time

- Overcharge detection delay time.....1ms to $(1ms\times2^{n1})+(1ms\times2^{n2})$

*n1 and n2 can select two arbitrary integers between 0 to 13. (However n1≠n2)

(3) Low current consumption

- Typ. 3.5μA, Max. 5.0μA (Vcell=4.0V)
- Typ. 0.15μA, Max. 0.30μA (Vcell=2.3V)

(4) Absolute maximum ratings

- VDD pin.....VSS-0.3V to VSS+28V
- 0V pin.....VSS-0.3V to VDD+0.3V
- Storage temperature.....-55°C to +125°C
- Operation temperature.....-40°C to +110°C

Pin assignment

SOT-26A

(Top view)

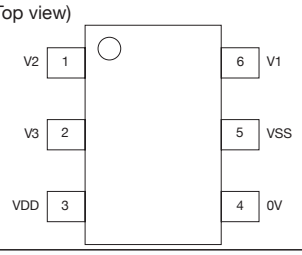

Pin no.	Symbol	Function
1	V2	The input terminal of the positive voltage of V2 cell, and the negative voltage of V3 cell
2	V3	The input terminal of the positive voltage of V3 cell, and the negative voltage of V4 cell
3	VDD	The input terminal of the power supply of IC, and the positive voltage of V4 cell
4	0V	Output of over charge detection (Output type is CMOS)
5	VSS	The input terminal of the ground of IC, and the negative voltage of V1 cell
6	V1	The input terminal of the positive voltage of V1 cell, and the negative voltage of V2 cell

SSON-6A

(Top view)

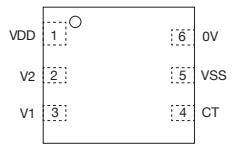

Pin no.	Symbol	Function
1	VDD	The input terminal of the power supply of IC, and the positive voltage of V4 cell
2	V3	The input terminal of the positive voltage of V3 cell, and the negative voltage of V4 cell
3	V2	The input terminal of the positive voltage of V2 cell, and the negative voltage of V3 cell
4	V1	The input terminal of the positive voltage of V1 cell, and the negative voltage of V2 cell
5	VSS	The input terminal of the ground of IC, and the negative voltage of V1 cell
6	0V	Output of over charge detection (Output type is CMOS)

2 to 3 cells lithium–ion/lithium–polymer battery secondary protection IC

MM3508C Series

Outline

MM3508C series are double protection IC for 2 to 3 serial cells lithium–on / lithium–polymer battery for secondary protection IC. It detects overcharge voltage with high accuracy for each cell.

The terminal CT is used to control the output voltage of the terminal 0V.

Features

(Unless otherwise specified, Ta=25°C)

(1) Range and accuracy of overcharge detection/hysteresis voltage

- Overcharge detection voltage.....4.0V to 4.5V, 5mV step ..... Accuracy±20mV (Ta=0 to +50°C)
- Overcharge hysteresis voltage.....50mV to 500mV, 50mV step ..... Accuracy±160mA

(2) Range of detection delay time

- Overcharge detection delay time.....1ms to $(1ms \times 2^{n1})+(1ms \times 2^{n2})$

*n1 and n2 can select two arbitrary integers between 0 to 13. (However n1≠n2)

(3) Low current consumption

- Typ. 3.0μA, Max. 5.0μA (Vcell=4.0V)
- Typ. 2.5μA, Max. 4.0μA (Vcell=2.3V)

(4) Absolute maximum ratings

- VDD pin.....VSS-0.3V to VSS+18V
- OV pin .....VSS-0.3V to VDD+0.3V
- Storage temperature.....-55°C to +125°C
- Operation temperature.....-40°C to +110°C

(5) The terminal CT is used to control the output voltage of the terminal 0V.

Pin assignment

SOT-26A

(Top view)

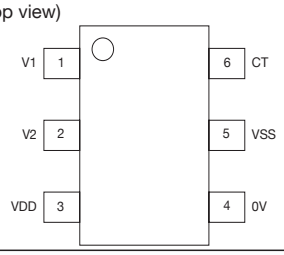

Pin no.	Symbol	Function
1	V1	The input terminal of the positive voltage of V1 cell, and the negative voltage of V2 cell
2	V2	The input terminal of the positive voltage of V2 cell, and the negative voltage of V3 cell
3	VDD	The input terminal of the power supply of IC, and the positive voltage of V4 cell
4	0V	Output of over charge detection (Output type is CMOS)
5	VSS	The input terminal of the ground of IC, and the negative voltage of V1 cell
6	CT	The input terminal of OV output control signal

SSON-6A

(Top view)

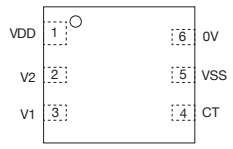

Pin no.	Symbol	Function
1	VDD	The input terminal of the power supply of IC, and the positive voltage of V3 cell
2	V2	The input terminal of the positive voltage of V2 cell, and the negative voltage of V3 cell
3	V1	The input terminal of the positive voltage of V1 cell, and the negative voltage of V2 cell
4	CT	The input terminal of OV output control signal
5	VSS	The input terminal of the ground of IC, and the negative voltage of V1 cell
6	0V	Output of over charge detection (Output type is CMOS)

Selection guide

MODEL	Package	Function	Overcharge detection voltage [V]	Overcharge hysteresis voltage [mV]	Detection delay time [s]	Latch function	Standby function	Terminal CT
			V_{CELLU}	V_{HYS}	T_{OV}			
MM3508A01RRE	SSON-6A	2~4cell	4.220±0.02	500±100	4.10±0.9	○	○	-
MM3508A02RRE	SSON-6A	2~4cell	4.350±0.02	500±100	4.10±0.9	○	○	-
MM3508A03RRE	SSON-6A	2~4cell	4.450±0.02	500±100	4.10±0.9	○	○	-
MM3508A04RRE	SSON-6A	2~4cell	4.320±0.02	500±100	4.10±0.9	○	○	-
MM3508A05RRE	SSON-6A	2~4cell	4.370±0.02	500±100	4.10±0.9	○	○	-
MM3508A06RRE	SSON-6A	2~4cell	4.500±0.02	500±100	4.10±0.9	○	○	-
MM3508A07RRE	SSON-6A	2~4cell	4.375±0.02	500±100	4.10±0.9	○	○	-
MM3508B01RRE	SSON-6A	2~4cell	4.450±0.02	500±100	5.00±1.5	-	○	-
MM3508B06RRE	SSON-6A	2~4cell	4.350±0.02	V4:620±100 V3~V1:270±100	4.00±1.2	-	○	-
MM3508B07RRE	SSON-6A	2~4cell	4.300±0.02	V4:620±100 V3~V1:270±100	4.00±1.2	-	○	-
MM3508B08RRE	SSON-6A	2~4cell	4.450±0.02	V4:620±100 V3~V1:270±100	4.00±1.2	-	○	-
MM3508B09RRE	SSON-6A	2~4cell	4.500±0.02	V4:620±100 V3~V1:270±100	4.00±1.2	-	○	-
MM3508B10RRE	SSON-6A	2~4cell	4.400±0.02	V4:620±100 V3~V1:270±100	4.50±1.35	-	○	-
MM3508C01RRE	SSON-6A	2~3cell	4.350±0.02	390±160	4.00±1.2	-	-	○
MM3508C01NRH	SOT-26A	2~3cell	4.350±0.02	390±160	4.00±1.2	-	-	○
MM3508C02RRE	SSON-6A	2~3cell	4.350±0.02	390±160	5.65±1.7	-	-	○
MM3508C02NRH	SOT-26A	2~3cell	4.350±0.02	390±160	5.65±1.7	-	-	○
MM3508C03RRE	SSON-6A	2~3cell	4.450±0.02	390±160	5.65±1.7	-	-	○
MM3508C03NRH	SOT-26A	2~3cell	4.450±0.02	390±160	5.65±1.7	-	-	○
MM3508C04RRE	SSON-6A	2~3cell	4.450±0.02	390±160	4.00±1.2	-	-	○

Please inquire to us, if you request a rank other than the above.

Typical application circuit

■MM3508A ■MM3508B Series (When using it for 4 cells)

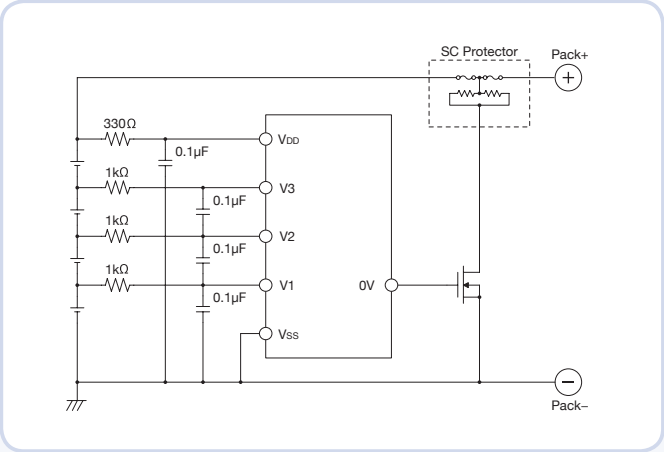

■MM3508C Series (When using it for 3 cells)

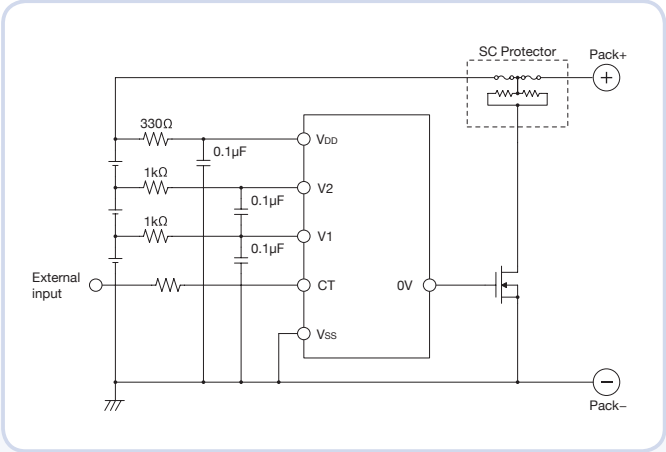

1 to 3 cells lithium–ion/lithium–polymer battery secondary protection IC

MM3563 Series

Outline

MM3563 series are secondary protection IC using high voltage CMOS process for overcharge protection of the rechargeable lithium–ion or lithium-polymer battery.
The high accuracy overcharge detection of each cell of the rechargeable 1 to 3–cell Lithium-ion or Lithium-polymer battery is possible.
Each of these IC composed of four voltage detectors, reference voltage sources, oscillator, counter circuit and logical circuits.
The ultra-small package SSON-6A is used to minimize footprints.

Features

(Unless otherwise specified, Ta=25°C)

(1) Range and accuracy of overcharge detection/hysteresis voltage
- Overcharge detection voltage4.0V to 4.5V, 5mV step ..... Accuracy±25mV (Topr=0 to +60°C)
- Overcharge hysteresis voltage.....detection voltage -50mV to 500mV..... Accuracy±50mV to 100mV

(2) Range of overcharge detection delay time
- Overcharge detection delay time.....1ms to $(1ms\times2^{n1})+(1ms\times2^{n2})$

*n1 and n2 can select two arbitrary integers between 0 to 13. (However n1≠n2)

(3) Low current consumption
- Typ. 1.5μA Max. 3.0μA (Vcell=4.0V)
- Typ. 0.15μA Max. 0.30μA (Vcell=2.3V)

(4) Absolute maximum ratings
- VDD pin..... VSS-0.3V to 18V
- 0V pin..... VSS-0.3V to VDD+0.3V
- Storage temperature..... -55°C to +125°C
- Operation temperature..... -40°C to +110°C

Pin assignment

SOT-26A

(Top view)

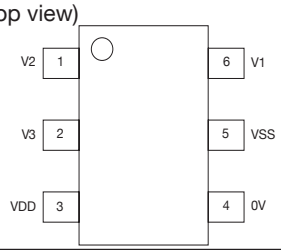

Pin no.	Symbol	Function
1	V2	The input terminal of the positive voltage of V2 cell, and the negative voltage of V3 cell
2	V3	The input terminal of the positive voltage of V3 cell
3	VDD	The input terminal of the power supply of IC
4	0V	Output of over charge detection. Output type is CMOS
5	VSS	The input terminal of the ground of IC, and the negative voltage of V1 cell
6	V1	The input terminal of the positive voltage of V1 cell, and the negative voltage of V2 cell

SSON-6A

(Top view)

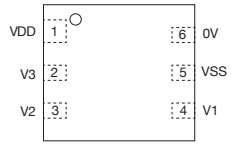

Pin no.	Symbol	Function
1	VDD	The input terminal of the power supply of IC
2	V3	The input terminal of the positive voltage of V3 cell
3	V2	The input terminal of the positive voltage of V2 cell, and the negative voltage of V3 cell
4	V1	The input terminal of the positive voltage of V1 cell, and the negative voltage of V2 cell
5	VSS	The input terminal of the ground of IC, and the negative voltage of V1 cell
6	0V	Output of over charge detection. Output type is CMOS

Selection guide

Product name	Overcharge detection voltage [V]	Overcharge hysteresis voltage [mV]	Detection delay time [s]	Stand by function
	$V_{CELL}U$	V_{HYS}	T_{OV}	
MM3563B01NRH	4.350±0.025	340±100	2.0±30%	○
MM3563B02NRH	4.350±0.025	100±50	2.0±30%	○
MM3563B02RRE	4.350±0.025	100±50	2.0±30%	○
MM3563B03NRH	4.350±0.025	100±50	6.0±30%	○
MM3563B03RRE	4.350±0.025	100±50	6.0±30%	○
MM3563B04NRH	4.450±0.025	200±70	2.0±30%	○
MM3563B04RRE	4.450±0.025	200±70	2.0±30%	○
MM3563B05RRE	4.350±0.025	500±100	4.1±30%	○
MM3563B06RRE	4.450±0.025	500±100	4.1±30%	○
MM3563B07RRE	4.300±0.025	100±50	2.0±30%	○
MM3563B08RRE	4.400±0.025	200±70	2.0±30%	○
MM3563B09RRE	4.220±0.025	500±100	4.1±30%	○
MM3563B11RRE	4.350±0.025	300±80	6.0±30%	○
MM3563B13RRE	4.500±0.025	500±100	4.1 ±30%	○

Please inquire to us, if you request a rank other than the above.

Typical application circuit

When using it for 3 cells

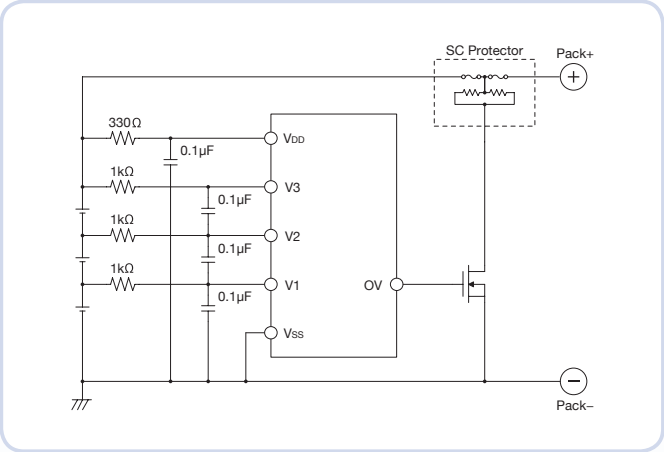

3, 4cells lithium–ion/lithium–polymer battery secondary potection protection IC

MM3625 Series

Outline

The **MM3625** series are secondary protection IC using high voltage CMOS process for overcharge protection of the rechargeable lithium–ion or lithium–polymer battery.
The high accuracy overcharge detection of each cell ofthe rechargeable 3,4 cell Lithium-ion or Lithium-polymer battery is possible.

The IC has a regulator and it ispossible to stop regulator by detected overdischarge.
The internal circuit of IC is composed by the voltagedetector, the reference voltage source, delay time control circuit, the logical circuit, and regulator circuit etc.

Features

(Unless otherwise specified, Ta=25°C)

(1) Range and accuracy of detection/release voltage

- Overcharge detection voltage — 3.6V to 4.5V, 5mV steps ..... Accuracy±25mV (Topr=0 to +50°C)
- Overcharge release voltage — 3.4V to 4.5V, 50mV steps ..... Accuracy±50mV
- VOU OFF voltage — 2.1V to 3.2V, 10mV steps ..... Accuracy±50mV
- VOUT ON voltage *1 — 2.3V to 3.4V, 50mV steps ..... Accuracy±75mV

*1 This parameter can set when starting conditions of VOUT are voltage release

(2) Range and accuracy of detection/release delay time *2

- Overcharge detection delay time .....time1ms to $(1ms\times2^{n1})+(1ms\times2^{n2})+(1ms\times2^{n3})$.... Accuracy±25%
- Overcharge release delay time.....1ms to $(1ms\times2^{n1})$..... Accuracy±25%
- VOUT OFF delay time .....1ms to $(1ms\times2^{n1})+(1ms\times2^{n2})+(1ms\times2^{n3})$..... Accuracy±25%

*2 n1,n2 and n3 can select arbitrary integers between 0 to 17. (However n1≠n2≠n3)

(3) Range and accuracy of regulator output voltage

- VOUT pin output voltage .....1.8V to 5.0V, 50mV steps ..... Accuracy±100mV

(4) The setting for three cell and for four cell protection can be set with the SEL pin

(5) Regulator output can be control with the EN pin

- It does not stop regulator during “H” level is applied to EN pin. When EN pin is “L” level and cell voltage lower than VOUT OFF voltage, it stop regulator

(6) FUSE pin can control with the CTL pin

If “H” level is applied to CTL pin without cell voltage, FUSE pin outputs “H” level. In case of “L” level is applied to CTL pin, FUSE pin outputs “H” level by overcharge detecton

(7) Low current consumption

- Current consumption1(VDD pin) Vcell=3.5V .....Typ. 4.5μA Max. 6.5μA
- Current consumption1(VDD pin) Vcell=2.5V .....Max. 0.1μA(When starting conditions of VOUT are EN pin.)
  Max. 1.0μA(When starting conditions of VOUT are cell voltage.

(8) Absolute maximum ratings

- VDD pin — VSS-0.3V to VSS+20V
- Voltage between the input pins of voltage of battery — -0.3V to +10V
- FUSE pin, EN pin, SEL pin,CTL pin supply voltage — VSS-0.3V to VDD+0.3V
- VOUT pin output voltage — VSS-0.3V to VSS+20V
- VOUT pin output current — 150μA
- Storage temperature — -55°C to +125°C
- Operating temperature — -55°C to +125°C

(9) Recommened operating conditions

- Operating temperature — -40°C to +85°C
- Supply Voltage — VSS 4.5V to VSS 18.0V
- VOUT pin output current — 0 to 100μA

Pin assignment

PLP-10A

(Top view)

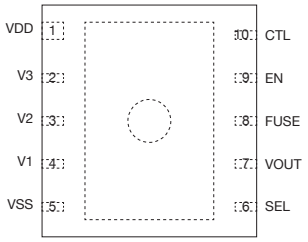

Pin no.	Symbol
1	VDD
2	V3
3	V2
4	V1
5	VSS
6	SEL
7	VOUT
8	FUSE
9	EN
10	CTL

Selection guide

Product name	Overcharge detection voltage	Overcharge release voltage	VOUT OFF voltage	VOUT ON voltege	Overcharge detection delay time	Overcharge output keep time	Overcharge release delay time	VOUT OFF delya time	VOUT pin output voltage	Current consumption1 (VDD)	Current consumption1 (VDD)	Overcharger output latch function	Overcharge timer reset delay function	VOUT output starting conditions
	V_{DET1}	V_{REL1}	V_{OFF}	V_{REL2}	t_{VDET1}	$t_{VDET1-2}$	t_{VREL1}	t_{VDET2}	V_{OUT}	I_{DD1}	I_{DD2}			
	V	V	V	V	sec	sec	msec	msec	V	μA	μA			
MM3625A01RRE	4.425	-	2.750	-	4.10	90.11	-	10.0	2.900	6.0	0.1	○	-	EN pin
MM3625A02RRE	4.300	-	2.500	-	4.10	90.11	-	10.0	3.300	6.0	0.1	○	-	EN pin
MM3625B02RRE	4.450	4.250	2.500	-	4.10	-	16.0	10.0	3.300	6.0	0.1	-	-	EN pin
MM3625B03RRE	4.450	4.250	2.750	-	7.17	-	16.0	10.0	3.300	6.0	0.1	-	-	EN pin
MM3625B04RRE	4.500	4.300	2.750	-	7.17	-	16.0	10.0	3.300	6.0	0.1	-	-	EN pin
MM3625Y01RRE	4.425	-	2.750	-	4.10	90.11	-	4096.0	2.900	6.0	0.1	○	-	EN pin
MM3625Z01RRE	4.425	-	2.750	-	4.10	90.11	-	4096.0	2.900	6.0	0.1	○	-	EN pin

* Y01 and Z01 rank do not have a SEL pin. Y01 rank is 3cells protection. Z01 rank is 4cells protection.
Y01 rank and Z01 rank differ in other rank and operation. Please check by specifications individual for details.

Please inquire to us, if you request a rank other than the above.

Typical application circuit

4 cells protection circuit

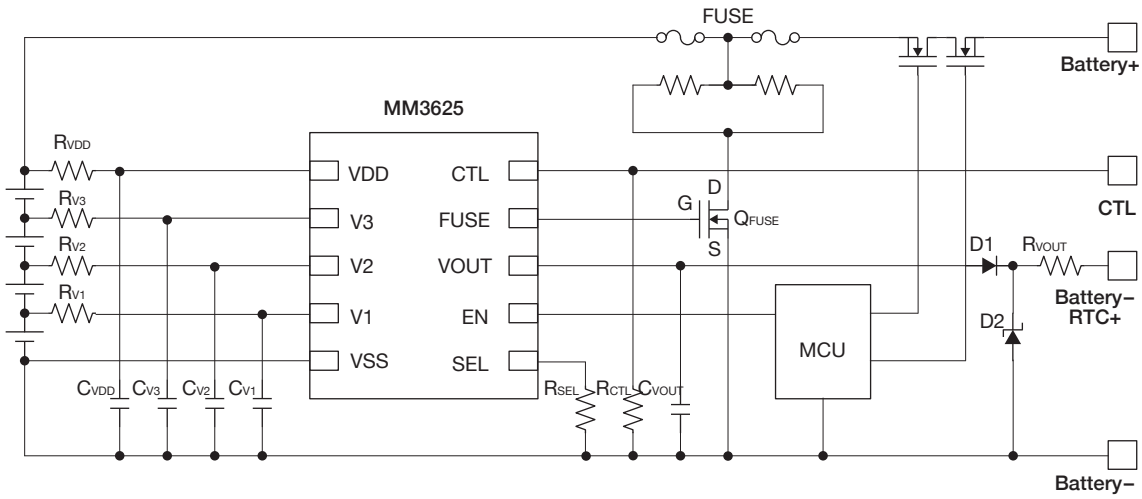

3 cells protection circuit

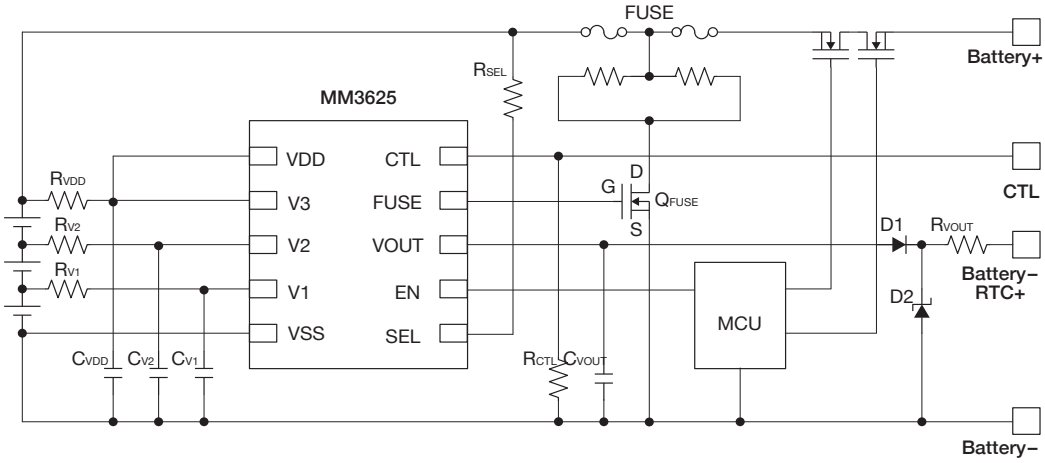

Voltage monitoring IC with protection IC

MW3790 Series

Outline

The MW3790 is a voltage monitoring IC with a function of the protection IC for lithium ion batteries.
For a solution including a charge circuit, the MW3790 on the battery pack realizes accurate measurement of the battery voltage. This solution can maximize the CC (constant current) charge mode of the charge circuit,and reduce the charge. As a communication interface, MIPI® BIF, which is a battery interface developed byMIPI® Alliance (an international organization), is used.

Features

(Unless otherwise specified, Ta=25°C)

(1) 0V battery charge function permission or inhibition....Inhibition
1.5V ..... Accuracy±0.10V

(2) High accuracy of voltage detection circuit
- Overcharge detection voltage.....4.425V ..... Accuracy±0.020V
- Overdischarge detection voltage.....2.450V ..... Accuracy±0.035V
- Discharge overcurrent detection voltage.....34.0mV ..... Accuracy±5.0mV
- Charge overcurrent detection voltage .....–22.0mV ..... Accuracy±3.3mV
- Short detection voltage1.....80.0mV ..... Accuracy±9.0mV

(3) Low current consumption

(4) Protection mode latch function
- Overcharge.....Disable
- Overdischarge.....Disable
- Discharge overcurrent.....Disable
- Charge overcurrent .....Enable

(5) EEPROM.....equipped

(6) Communication method.....MIPI® BIF compliant

Applications

(1) Voltage monitoring
(2) Li-ion battery protection

Pin assignment

PLP-8G

(Top view)

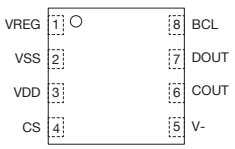

Pin no.	Symbol	Function
1	VREG	Regulator output terminal
2	VSS	VSS terminal
3	VDD	VDD terminal
4	CS	Current detection terminal
5	V-	Negative power supply voltage input terminal
6	COUT	Charge FET control terminal
7	DOUT	Discharge FET control terminal
8	BCL	BCL terminal for BIF communication

Selection guide

Product name	Package	Overcharge detection voltage	Overcharge release voltage	Overdischarge detection voltage	Overdischarge release voltage	Discharging overcurrent detection voltage	Charging overcurrentCharging detection voltage	Short detection voltage1	Short detection voltage2
		Vdet1	Vrel1	Vdet2	Vrel2	Vdet3	Vdet4	Vshort1	Vshort12
MW3790MT1RRE	PLP-8G	4.425	4.225	2.450	2.800	0.034	-0.022	0.080	VDD-0.9
MW3790MT4RRE	PLP-8G	4.475	4.275	2.450	2.800	0.034	-0.028	0.080	VDD-0.9
MW3790MT5RRE	PLP-8G	4.425	4.225	2.450	2.800	0.035	-0.035	0.080	VDD-0.9

Please inquire to us, if you request a rank other than the above.

Bock diagram

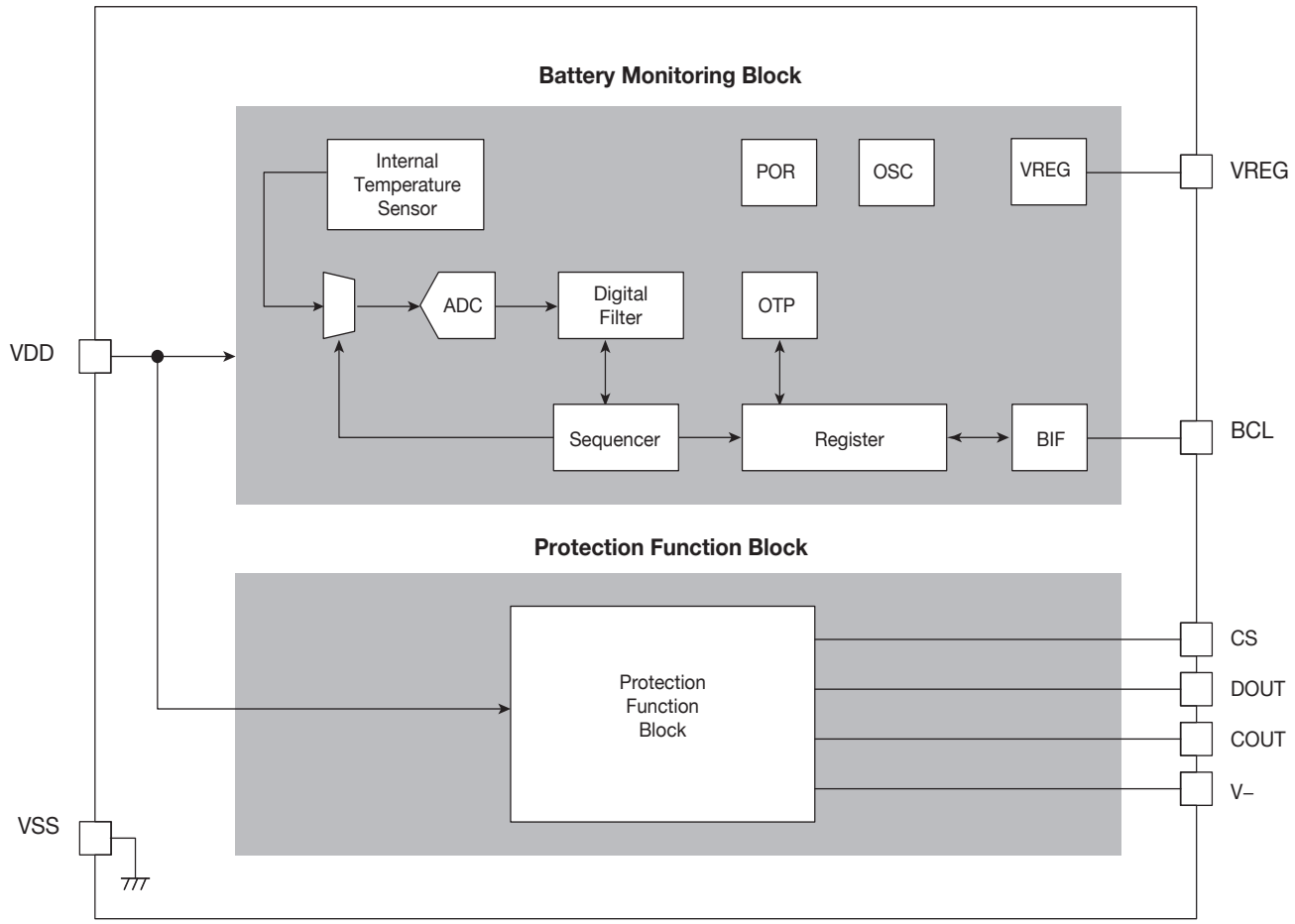

Voltage monitoring IC with protection IC

MW3793 Series

Outline

The MW3793 is a voltage monitoring IC with a function of the protection IC for lithium ion batteries.
For a solution including a charge circuit, the MW3793 on the battery pack realizes accurate measurement of the battery voltage. This solution can maximize the CC (constant current) charge mode of the charge circuit, and reduce the charge. As a communication interface, MIPI® BIF, which is a battery interface developed by MIPI® Alliance (an international organization), is used.

Features

(Unless otherwise specified, Ta=25°C)

(1) 0V battery charge function permission or inhibition.....Inhibition
1.5V ..... Accuracy±0.10V

(2) High accuracy of voltage detection circuit
- Overcharge detection voltage.....4.425V ..... Accuracy±0.020V
- Overdischarge detection voltage.....2.450V ..... Accuracy±0.035V
- Discharge overcurrent detection voltage.....34.0mV ..... Accuracy±5.0mV
- Charge overcurrent detection voltage .....–22.0mV ..... Accuracy±3.3mV
- Short detection voltage1.....80.0mV ..... Accuracy±9.0mV

(3) Low current consumption

(4) Protection mode latch function
- Overcharge.....Disable
- Overdischarge.....Disable
- Discharge overcurrent.....Disable
- Charge overcurrent .....Enable

(5) Communication method.....MIPI® BIF compliant

Applications

(1) Voltage monitoring
(2) Li-ion battery protection

Pin assignment

PLP-8H

(Top view)

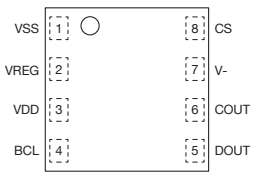

Pin no.	Symbol	Function
1	VSS	VSS terminal
2	VREG	Regulator output terminal
3	VDD	VDD terminal
4	BCL	BCL terminal for BIF communication
5	DOUT	Discharge FET control terminal
6	COUT	Charge FET control terminal
7	V-	Negative power supply voltage input terminal
8	CS	Current detection terminal

Selection guide

Product name	Package	Overcharge detection voltage	Overcharge release voltage	Overdischarge detection voltage	Overdischarge release voltage	Discharging overcurrent detection voltage	Charging overcurrentCharging detection voltage	Short detection voltage1	Short detection voltage2
		Vdet1	Vrel1	Vdet2	Vrel2	Vdet3	Vdet4	Vshort1	Vshort12
MW3793MT1RRE	PLP-8H	4.425	4.225	2.450	2.800	0.034	-0.022	0.080	VDD-0.9
MW3793MT4RRE	PLP-8H	4.475	4.275	2.450	2.800	0.034	-0.028	0.080	VDD-0.9
MW3793MT5RRE	PLP-8H	4.425	4.225	2.450	2.800	0.035	-0.035	0.080	VDD-0.9

Please inquire to us, if you request a rank other than the above.

Block diagram

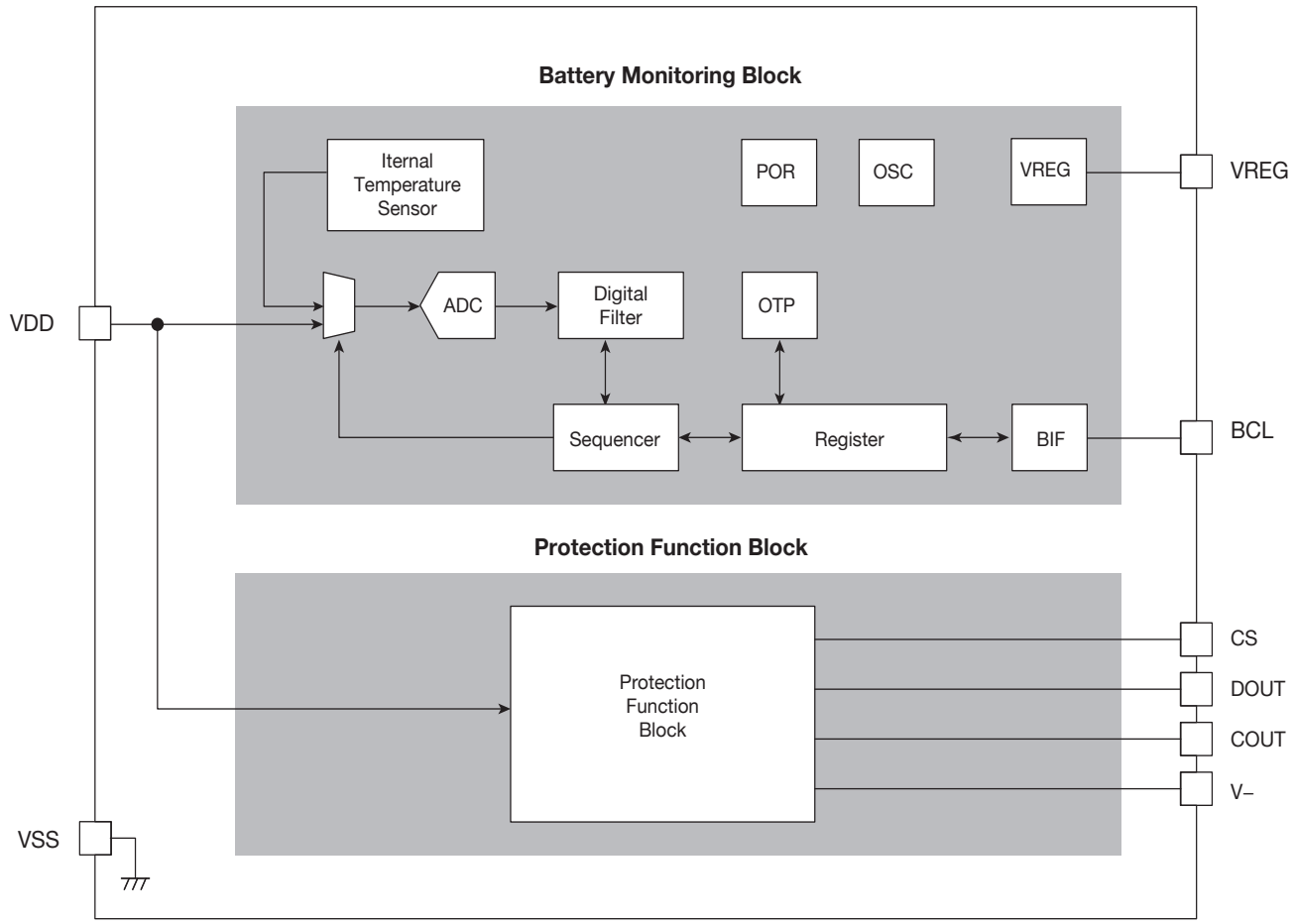

Voltage and temperature monitoring IC with BIF

MM3757 Series

Outline

The MM3757 is a voltage and temperature monitoring IC. For a solution including a charge circuit, the MM3757 on the battery pack realizes accurate measurement of the battery voltage.
This solution can maximize the CC (constant current) charge mode of the charge circuit, and reduce the charge. As a communication interface, MIPI® BIF, which is a battery interface developed by MIPI® Alliance (an international organization), is used.

Features

(Unless otherwise specified, Ta=25°C)

(1) Highly accurate measurement of battery voltage and temperature

(2)) Communication method.....MIPI® BIF compliant

Applications

Voltage monitoring

Pin assignment

PLP-6H

(Top view)

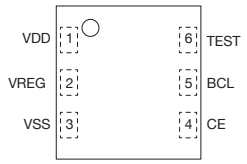

Pin no.	Symbol	Function
1	VDD	VDD terminal
2	VREG	Regulator output terminal
3	VSS	VSS terminal. Connected to ground
4	CE	Chip enable terminal
5	BCL	MIPI® BIF BCL terminal
6	TEST	Test terminal

Block diagram

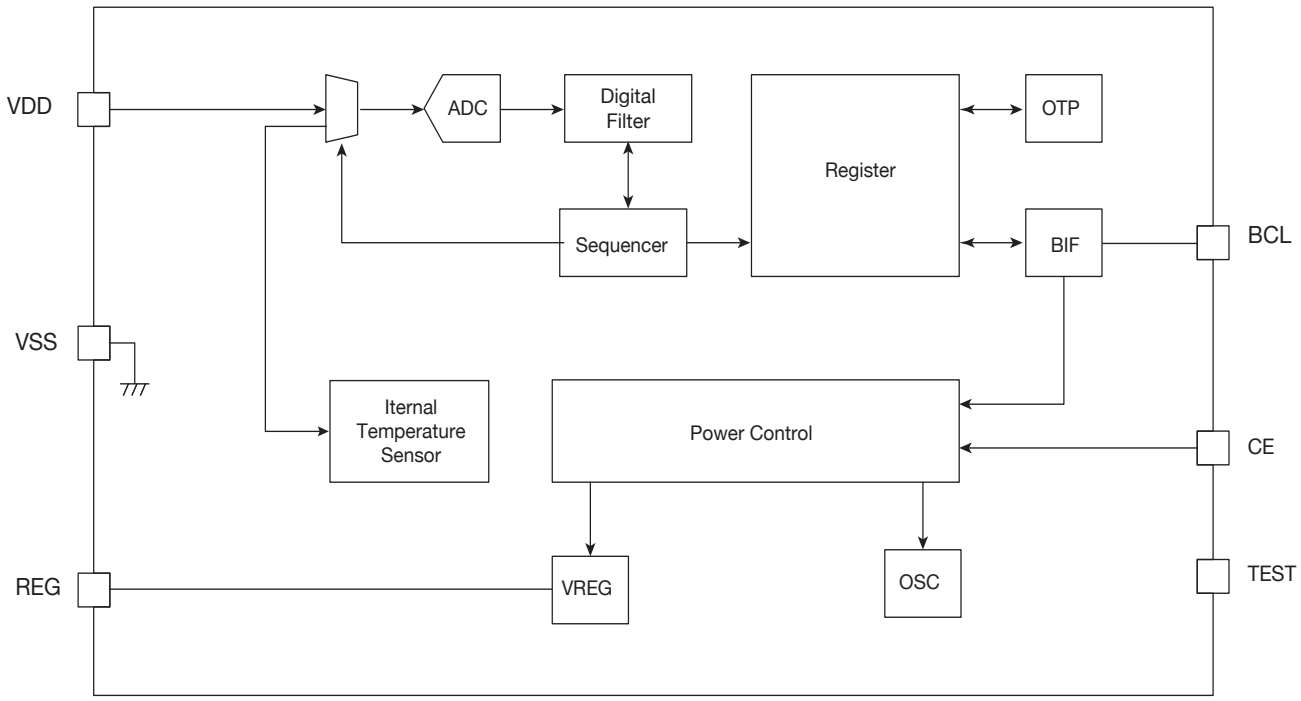

Voltage monitor IC for lithium–ion/lithium–polymer cell balance

MM3513 Series

Outline

MM3513 series are voltage monitor ICs for rechargeable lithium–ion or lithium–polymer batteries, using a high voltage CMOS process.
Each lithium-ion or lithium-polymer battery can be balanced.

Each of these ICs is composed of voltage detectors, reference voltage sources, an oscillator, a counter circuit and logical circuits.

Features

(Unless otherwise specified, Ta=25°C)

(1) High-accuracy detection voltage

- Detection voltage.....3.5V to 4.5V, 5mV steps ..... Accuracy±20mV
  Accuracy±25mV (Topr=-5°C to +60°C)
- Hysteresis voltage.....0V to 0.4V, 50mV steps.
  However, “Detection voltage-Hysteresis voltage<3.5V” is disabled.

(2) Range of Detection delay time

- Detection delay time .....Selectable from 0.25s, 1.0s, 1.2s, 3.0s, 4.5s.

(3) Low current consumption

- Normal mode .....Typ. 1.5μA, Max. 3.0μA
- Stand-by mode .....Max. 0.5μA

(4) Absolute maximum ratings

- VDD pin.....VSS-0.3V to +12V
- OUT pin.....VDD-0.3V to VDD+0.3V
- DS pin .....VSS-0.3V to VDD+0.3V
- Storage temperature.....-55°C to +125°C
- Operation temperature.....-40°C to +85°C

Pin assignment

SOT-25A

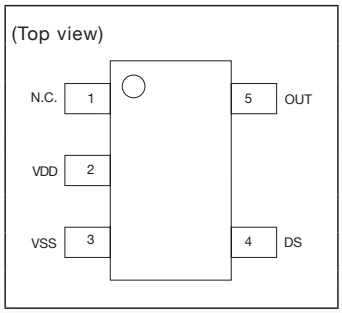

Pin no.	Symbol	Function
1	N.C.	Non connection
2	VDD	VDD terminal (Connected to IC substrait)
3	VSS	VSS terminal (Connected to ground)
4	DS	Delay shorten terminal
5	OUT	Output of detecting voltage (Output type is CMOS)

Selection guide

Product name	Package	Detection voltage [V]	Hysteresis voltage [V]	Detection delay time [sec]
		Vdet	Vhys	tVdet
MM3513A01NRH	SOT–25A	4.150	0.010	0.25
MM3513B01NRH	SOT–25A	3.750	0.010	0.25
MM3513C01NRH	SOT–25A	4.200	0.010	0.25
MM3513D01NRH	SOT–25A	3.600	0.010	0.25
MM3513D02NRH	SOT–25A	3.600	0.100	0.25
MM3513E03NRH	SOT–25A	4.350	0.380	3.0
MM3513F01NRH	SOT–25A	3.650	0.010	0.25
MM3513H01NRH	SOT–25A	4.175	0.010	0.25
MM3513J01NRH	SOT–25A	3.475	0.010	0.25
MM3513K01NRH	SOT–25A	4.180	0.010	0.25
MM3513L01NRH	SOT–25A	4.175	0.000	0.25

3,000pcs/Reel

Please inquire to us, if you request a rank other than the above.

Typical application circuit

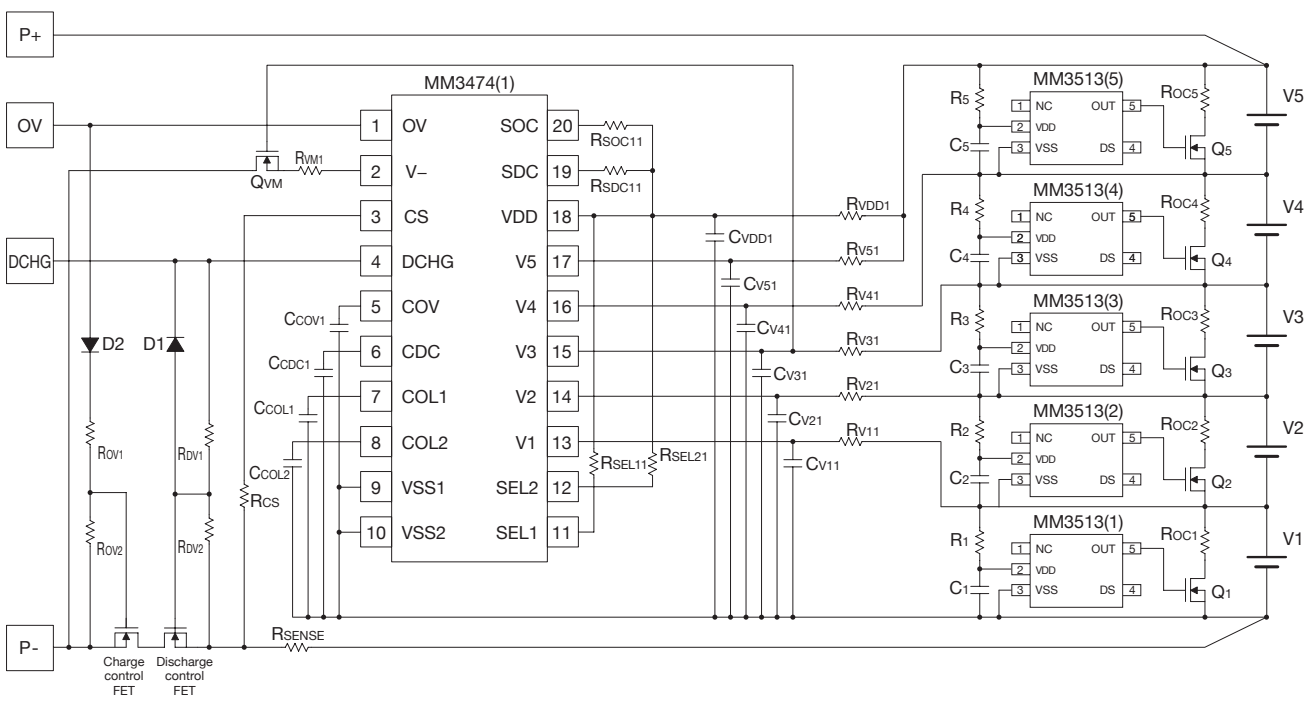

- Resistors R1 to R5 and capacitors C1 to C5 stabilize a supply voltage ripple. However, if the resistors R1 to R5 are increased, the detection voltage raises due to through-current in the IC. Therefore, adjust the value to 1k ohm or less. Moreover, the capacitors C1 to C5 should be 0.01μF or more to ensure stable operation.

- For resistors RDC1 to RDC5, the value of bypass current is determined.

Fuel gage IC for lithium–ion battery

MM8013

Outline

MM8013 is a high accuracy fuel gauge IC for 1–cell lithium–ion battery or lithium-polymer battery.
MM8013 measures temperature, voltage and current by high-precision delta-sigma AD converter and executes current integration both at discharging and charging using specific battery characteristics parameter and the measurement values.
The MM8013 offers excellent management ability for battery power.
The MM8013 achieves safety and security by following functions: battery degradation detection using capacitance change, anomaly detection.

Features

(Unless otherwise specified, Ta=25°C)

(1) High accuracy battery power management
- Battery power is based on current integration value which is measured periodically and is controlled to minimize its error by correction using open voltage (OCV) and battery characteristics parameter.

(2) High precision voltage measurement
- Electric current and voltage value are measured by high accuracy 16bit delta-sigma AD converter.
- The current resolution is 1mA and the voltage resolution is 1mV.

(3) Battery degradation detection
- Total capacity of battery is measured periodically and capacitance change status is monitored. Degradation detection is done using the depth of capacitance change.

(4) Low Current Consumption
- Current consumption .....60μA (operation)
  20μA (Low Power Active)
  1μA (Shutdown mode)

(5) Correspondence interface .....I²C interface

(6) Traceability
- Battery ID and manufacture / shipment information are stored in nonvolatile memory and are accessible.

(7) Operating Ambient temperature.....-20°C to +85°C

(8) Operating voltage .....2.5V to 5.5V

Pin assignment

PLP-12A

(Top view)

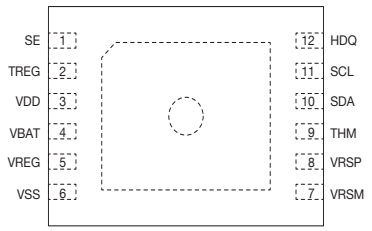

Pin no.	Symbol	Function
1	SE	General purpose output pin
2	TREG	Not Supported
3	VDD	Power supply pin
4	VBAT	Voltage sensor input pin
5	VREG	Regulator output pin
6	VSS	Power supply pin
7	VRSM	Current sensor input pin
8	VRSP	Current sensor input pin
9	THM	Thermistor input
10	SDA	I^2C data input/output
11	SCL	I^2C clock input
12	HDQ	General purpose output pin

Typical application circuit

Example of the battery pack side loading

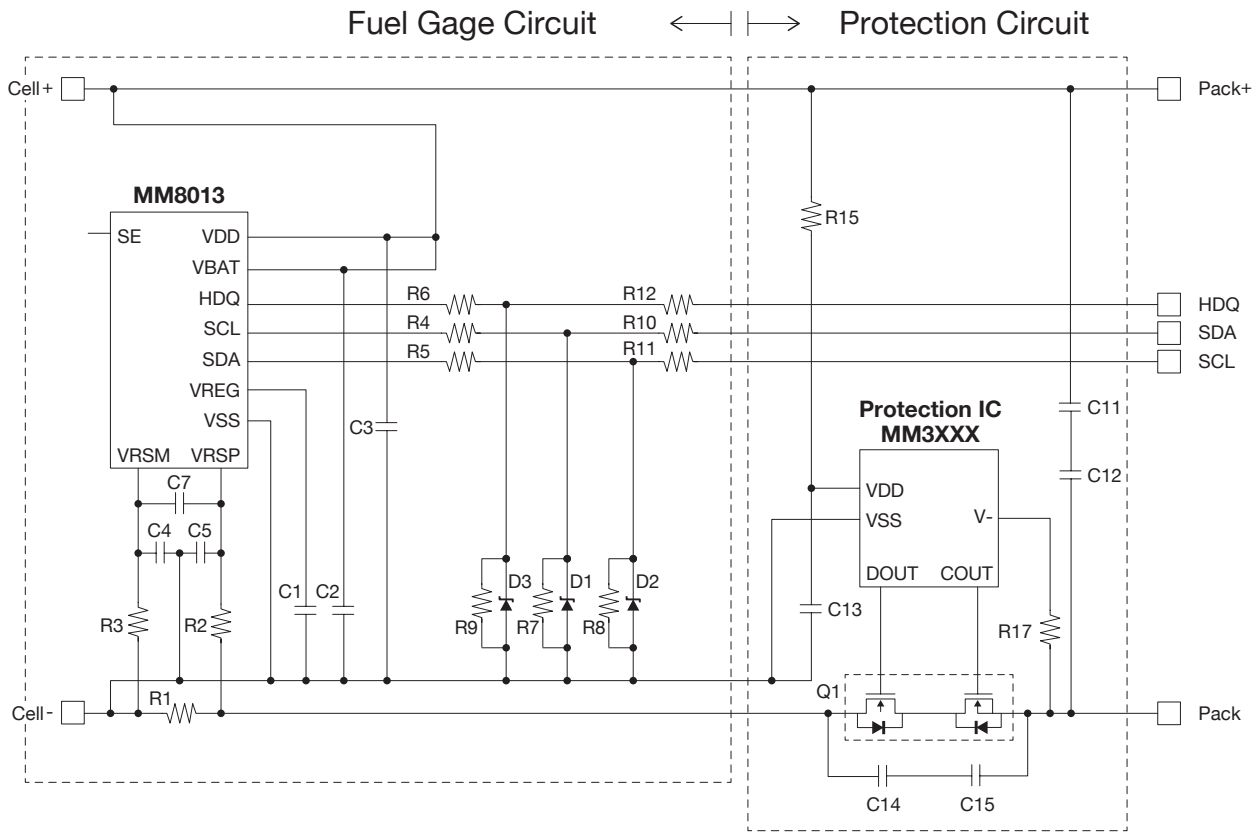

Fuel gage IC for lithium–ion battery

MM8013W

Outline

The **MM8013W** is a high accuracy fuel gauge IC for 1-cell lithium-ion battery or lithium-polymer battery.
The MM8013W measures temperature, voltage and current by high-precision delta-sigma AD converter and executes current integration both at discharging and charging using specific battery characteristics parameter and the measurement values.

The MM8013W offers excellent management ability for battery power.
MM8013W01 achieves both of high-accuracy battery power prediction and ultra-low power consumption if the host MCU actively controls operation mode of the MM8013W01.

oprFeatures

(Unless otherwise specified, Ta=25°C

(1) Host-controllable operation mode for ultra-low power consumption
- MM8013W01 achieves both of high-accuracy battery power prediction and ultra-low power consumption if the host MCU actively controls operation mode of the MM8013W01 (using “Interval Active Mode”).

(2) High precision voltage measurement
- Electric current and voltage value are measured by high accuracy 16bit delta-sigma AD converter.
- The current resolution is 1mA and the voltage resolution is 1mV.

(3) Battery degradation detection
- Total capacity of battery is measured periodically and capacitance change status is monitored. Degradation detection is done using the depth of capacitance change.

(4) Low Current Consumption
- Current consumption .....60μA (Operation)
  20μA (Low Power Active)
  6.4μA (Interval Active mode)
  1μA (Shutdown mode)

(5) Correspondence interface .....I^2C interface

(6) Traceability
- Battery ID and manufacture / shipment information are stored in nonvolatile memory and are accessible.

(7) Operating Ambient temperature .....-20°C to +85°C

(8) Operating voltage .....2.5V to 5.5V

Pin assignment

PLP-12B

(Top view)

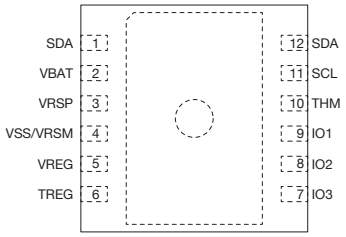

Pin no.	Symbol	Function
1	VDD	Power supply pin
2	VBAT	Voltage sensor input pin
3	VRSP	Current sensor input pin
4	VSS/VRSM	Power supply pin / Current sensor input pin
5	VREG	Regulator output pin
6	TREG	Regulator output for Thermistor
7	IO3	General purpose port
8	IO2	General purpose port
9	IO1	General purpose port
10	THM	Thermistor input
11	SCL	I^2C clock input
12	SDA	I^2C data input/output

Typical application circuit

Example of the set side loading

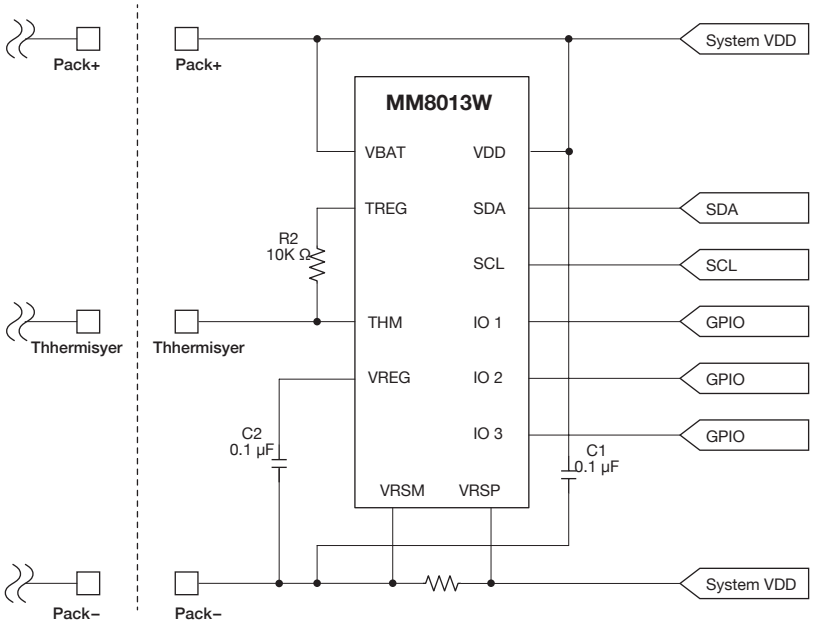

Fuel gage IC for lithium–ion battery

MM8033

Outline

The **MM8033** is a high accuracy fuel gage IC for 1–cell lithium–ion battery or lithium-polymer battery.
The MM8033 measures temperature, voltage and current by high-precision delta-sigma AD converter and executes current integration both at discharging and charging using specific battery characteristics parameter and the measurement values.

The MM8033 offers excellent management ability for battery power.
The MM8033 achieves safety and security by following functions: battery degradation detection using capacitance change, anomaly detection.

Features

(Unless otherwise specified, Ta=25°C)

(1) High accuracy battery power management
- Battery power is based on current integration value which is measured periodically and is controlled to minimize its error by correction using open voltage (OCV) and battery characteristics parameter.

(2) High precision voltage measurement
- Electric current and voltage value are measured by high accuracy 16bit delta-sigma AD converter.
- The current resolution is 1mA and the voltage resolution is 1mV.

(3) Battery degradation detection
- Total capacity of battery is measured periodically and capacitance change status is monitored. Degradation detection is done using the depth of capacitance change.

(4) Low Current Consumption
- Current consumption 32μA (Operation)
  20μA (Low Power Active)
  1μA (Shutdown)

(5) Correspondence interface.....I^2C interface

(6) Operating Ambient temperature.....–20°C to +85°C

(7) Operating voltage.....2.5V to 5.5V

Pin assignment

PLP-10D

(Top view)

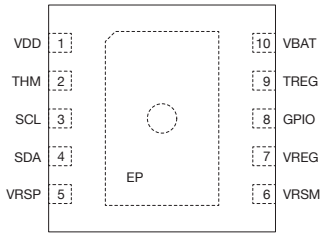

Pin no.	Symbol	Function
1	VDD	Power supply pin
2	THM	Thermistor input
3	SCL	I^2C clock input
4	SDA	I^2C data input/output
5	VRSP	Current sensor input pin
6	VRSM	Current sensor input pin
7	VREG	Regulator output pin
8	GPIO	Alert Indication output
9	TREG	Regulator output for Thermistor
10	VBAT	Voltage sensor input pin
–	EP	Exposed Pad.Connect to VRSM.

Pin assignment

WLCSP-9A

(Top view)

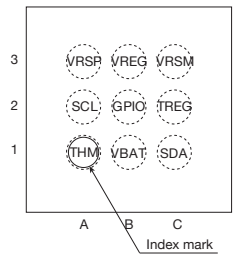

Pin no.	Symbol	Function
A1	THM	Thermistor input
A2	SCL	I²C clock input
A3	VRSP	Current sensor input pin
B1	VBAT	Voltage sensor input pin
B2	GPIO	Alert Indication output
B3	VREG	Regulator output pin
C1	SDA	I²C data input/output
C2	TREG	Regulator output for Thermistor
C3	VRSM	Current sensor input pin

Typical application circuit

Example of the set side loading

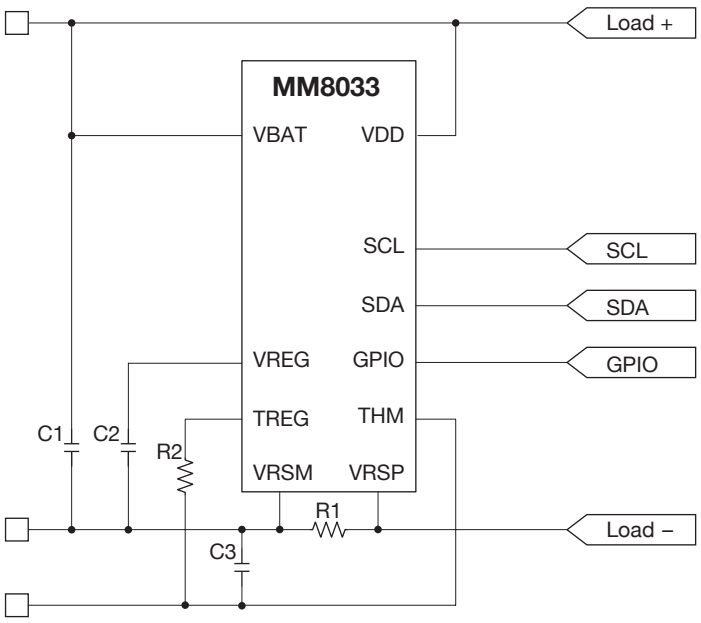

Fuel gauge IC for lithium–ion battery

MM3556

Outline

The **MM3556** is a high accuracy fuel gage IC for 1–cell lithium–ion battery or lithium-polymer battery.
The MM3556 calculates battery relative state of charge (RSOC [%]) using temperature, voltage value, which are measured by high precision ⊿ΣADC, and internal battery model. Electric current data is not needed for this calculation. Hence the MM3556 offers smarter system than general coulomb type fuel gage which needs sense resistor.
The MM3556 achieves low cost, small footprint and low power consumption and is the best solution for battery power prediction of mobile devices.

Features

(Unless otherwise specified, Ta=25°C)

(1) High accuracy prediction of RSOC
- The MM3556 predicts high accuracy RSOC corresponding to the host device's various operating conditions.
- The predicted value is continuous value. Under standard operating condition, voltage is minimum operation voltage value when RSOC is 0%. And battery power is 0 then.

(2) High precision voltage measurement
- Voltage is accurately measured by 16 bit ⊿ΣADC. The resolution is 1mV.

(3) Sense resistor is not necessary
- Circuit becomes simple, low cost and small.
- The system is free from accumulated error induced by coulomb counter.

(4) OTPROM for battery parameter storage
- OTPROM can store plural battery parameters for high accuracy RSOC prediction.
  Host device can decrease load for controlling parameters.

(5) Thermistor voltage-to-temperature conversion circuit
- The IC has battery pack thermistor voltage input pin and uses converted battery temperature for RSOC calculation.
- Host device can get this temperature value via I2C.

(6) Low Current Consumption
- Operating current.....Typ. 28μA / MAX. 45μA
- Sleep mode current .....Typ. 5μA / MAX. 10μA

(7) Correspondence interface.....I²C interface

(8) Operating Ambient temperature.....–20°C to +85°C

(9) Operating voltage.....2.2V to 5.0V

Pin assignment

PLP-8F

(Top view)

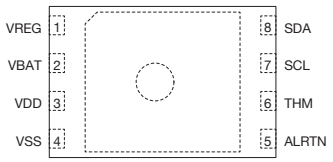

Pin no.	Symbol	Function
1	VREG	Regulator Output Pin
2	VBAT	Pin for measurement of battery voltage
3	VDD	Power supply pin
4	VSS	Power supply pin
5	ALRTN	Alert output pin
6	THM	External temperature input pin
7	SCL	I²C clock input
8	SDA	I²C data output

Typical application circuit

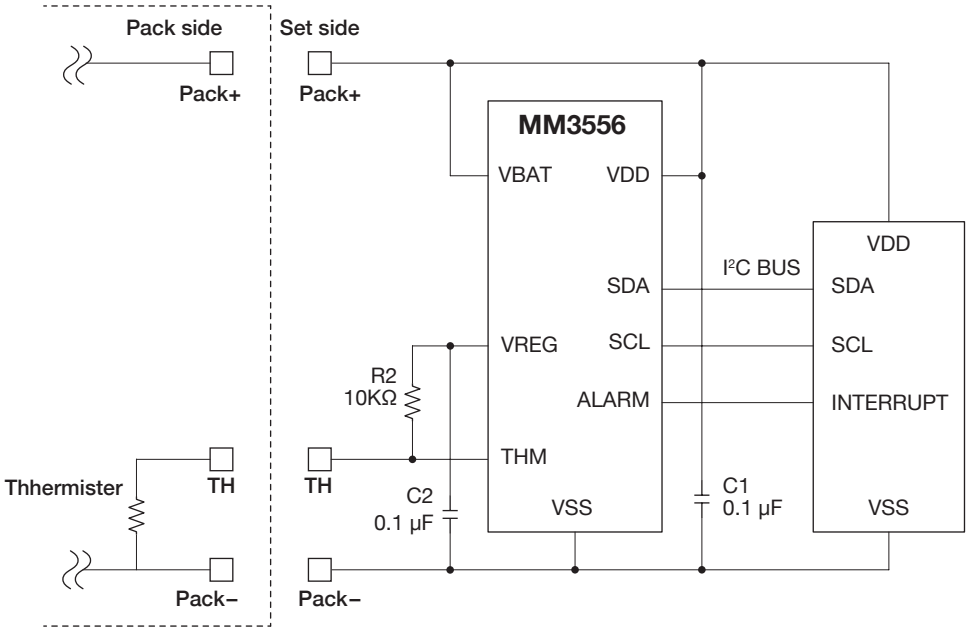

- If the impedance of VDD and GND wire is high, it causes noise and instable operation of the IC.
  Reconsider the wiring and suppress the impedance. Input capacitance should be placed as close to the IC as possible.
- Impedance of wiring from pack+ (P+) to VBAT and from pack- (P-) to VSS should be suppressed as low as possible. Voltage drop by wiring resistance looks detection voltage error and affects accuracy of battery power prediction.
- ALRTN pin is open–drain output. When using the pin, pull up the pin with external resistance.
- Output capacitance, C2, is necessary for phase compensation of the regulator. To suppress property fluctuation by noise, the capacitance should be placed as close to the IC as possible.

1cell Lithium–ion battery linear charge cotrol IC /Single function

MM3458

Outline

This IC is a linear charge control IC for 1–cell lithium–ion and lithium-polymer batteries.
This IC does not require an externally provided sensing resistor or reverse-current protection diode, enabling reductions in the component count and the amount of generated heat.
A function to detect rises in IC temperature during high-power charging is also included to allow charging at the optimal charging rate for any given temperature.

Features

(Unless otherwise specified, Ta=25°C)

(1) BAT Regulation Voltage .....4.2V±30mV (±0.7%)
(2) Fast Charge Current .....558mA±5% (RICHG=2.32kΩ)
(3) Trickle-charge current, Fast-charge current, Charge completion current can be set using external resistors (maximum charging current is 1.5A).
(4) Battery temperature detection function is provided via a thermistor, and so the charging voltage and current can be controlled according to the battery temperature.
(5) Chip temperature detection enables control of IC temperature rises at high-power charging. The battery can therefore be charged with optimal charging regulation.
(6) Built-in charging timer ..... Charging timer time can be freely set using external resistor.
(7) LED Driver.....Charging status 1ch

*Battery temperature detection
(Constant Current Mode/Constant Voltage Mode)

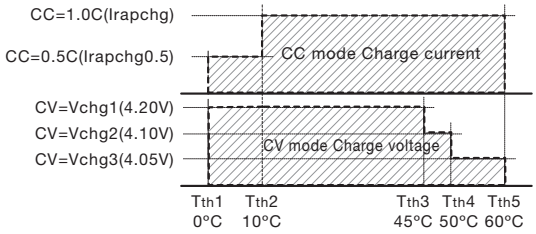

Applications

(1) Mobile phones, Smart phones
(2) Portable music players
(3) Tablet PCs
(4) Digital still cameras
(5) Portable games

Pin assignment

SSON-10A

(Top view)

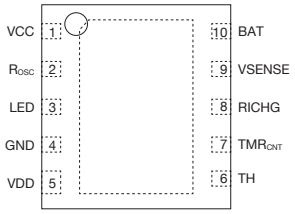

Pin no.	Symbol	Function
1	VCC	Power supply, charge Tr input pin. Connect to an AC adaptor
2	Rosc	Oscillation frequency setting resistance connection pin. fosc=0.912V/(1.425E-10*Rosc) Estimation: The fosc value for each Rosc value is specified on Data sheet
3	LED	LED connect pin (Nch open drain output) Turn on during charging
4	GND	Ground pin
5	VDD	Battery temperature detecting reference voltage pin It is not recommended to be used other than as battery temperature detecting reference voltage (resistance connection) since it is also used for internal charge current reference voltage
6	TH	Battery temperature detection input pin. Connect to a thermistor
7	TMRcnt	Timer (trickle charge timer, fast charge timer) ON/OFF control pin High: Timer stops, Low/open: Timer is valid
8	RICHG	Charge current setting resistance connection pin. ICHG=674×1.92V/RICHG Estimation: The Charge Current value for each RICHG value is specified on product specifications
9	VSENSE	Battery voltage detection, constant voltage charge control pin (Connect to the positive side of a battery pack)
10	BAT	Charge Tr output pin(Connect to the positive side of a battery pack)

Block diagram

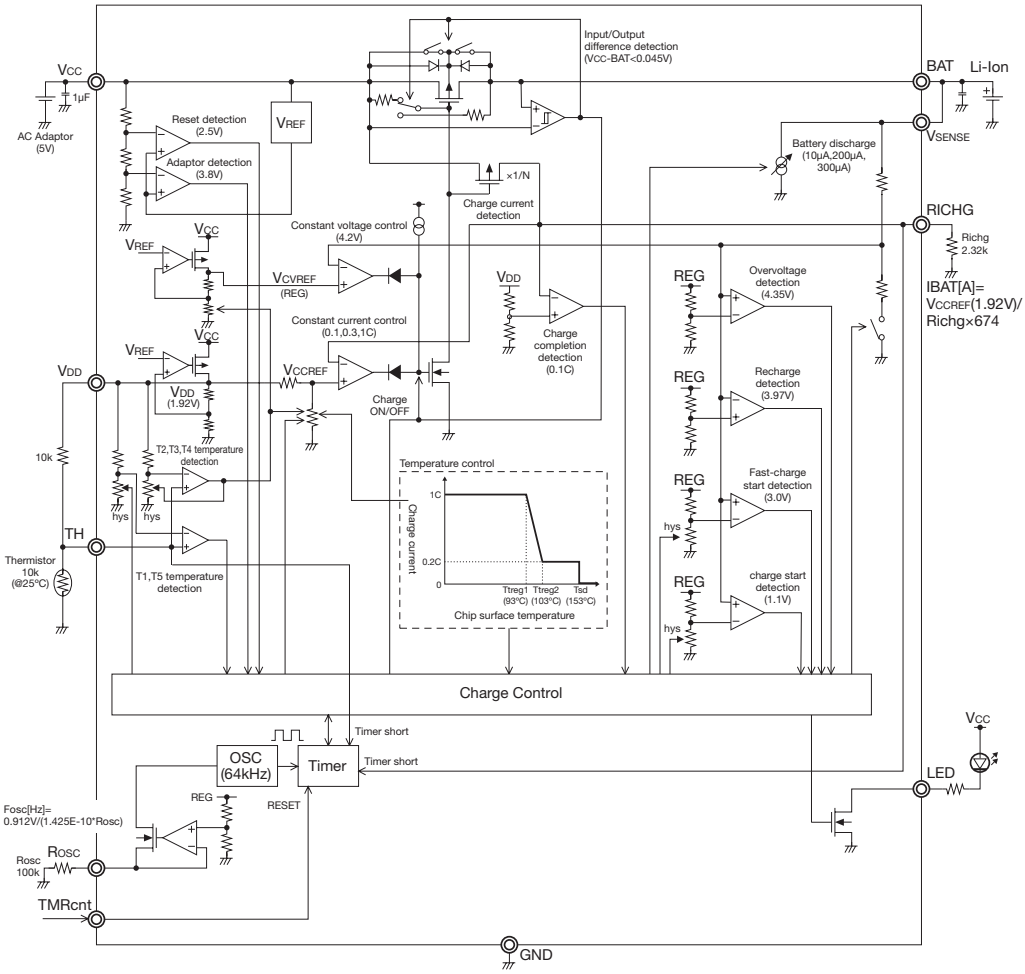

Typical application circuit

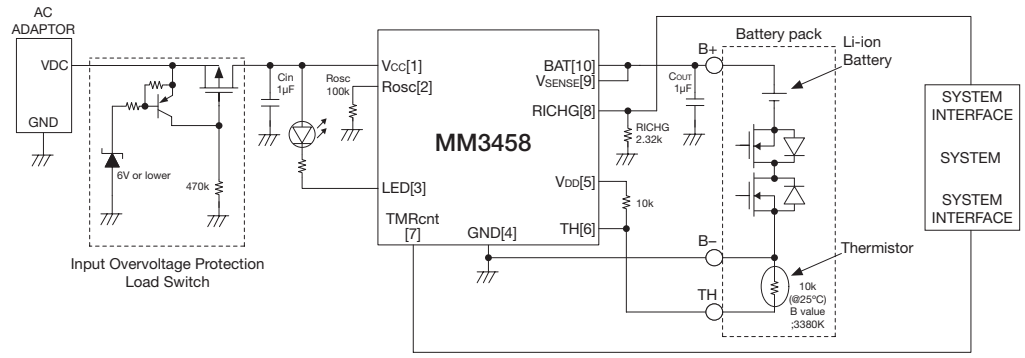

1 SECONDARY BATTERY ICs

1cell Lithium–ion battery linear charge cotrol IC /Single function (CV adjustable type)

MM3635

Outline

This IC is a linear charge control IC for 1-cell lithium-ion and lithium-polymer batteries.
It is capable of charging from 0V of battery voltage, so it is adaptive for low capacity battery (coin) .
It is capable of setting of BAT regulation voltage according to various battery.

It does not require an externally provided sensing resistor or reverse-current protection diode, enabling reductions in the component count and the amount of generated heat.
A function to charge control (ON/OFF) at high/low battery temperature ensures the safety of battery.

Features

(Unless otherwise specified, Ta=25°C)

(1) BAT Regulation Voltage .....4.2V±30mV / 4.05V±50mV (Setting by CVSEL pin)
(2) Fast Charge Current .....15mA±1.8mA (RICHG=74.2kΩ)
(3) Charging from 0V of battery voltage
(4) Trickle-charge current, Fast-charge current, Charge completion current can be set using external resistors
maximum charging current is 0.7A
(5) Battery temperature detection function is provided via a thermistor, and so the charging ON/OFF can becontrolled according to the battery temperature.
(6) Chip temperature detection enables control of IC temperature rises at high-power charging. The battery can therefore be charged with optimal charging regulation.
(7) Built-in charging timer.
(8) LED Driver .....Charging status 1ch

Applications

(1) Mobile phones , Smart phones
(2) Portable music players
(3) Tablet PCs
(4) Digital still cameras
(5) Portable games

Pin assignment

SSON-10A

(Top view)

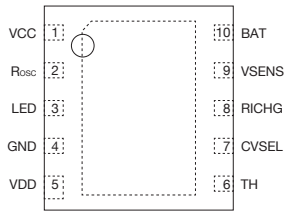

Pin no.	Symbol	Function
1	VCC	Power supply, charge Tr input pin. Connect to an AC adaptor
2	Rosc	Oscillation frequency setting resistance connection pin. fosc=0.912V/(1.425E-10*Rosc) Estimation: The fosc value for each Rosc value is specified on Data sheet
3	LED	LED connect pin (Nch open drain output) Turn on during charging
4	GND	Ground pin
5	VDD	Battery temperature detecting reference voltage pin It is not recommended to be used other than as battery temperature detecting reference voltage (resistance connection) since it is also used for internal charge current reference voltage
6	TH	Battery temperature detection input pin. Connect to a thermistor
7	CVSEL	A change pin of the charge constant voltage L or Open: CV=4.05V, H: CV=4.20V
8	RICHG	Charge current setting resistance connection pin. ICHG=674×1.92V/RICHG Estimation: The Charge Current value for each RICHG value is specified on product specifications
9	VSENSE	Battery voltage detection, constant voltage charge control pin (Connect to the positive side of a battery pack)
10	BAT	Charge Tr output pin(Connect to the positive side of a battery pack)

Block diagram

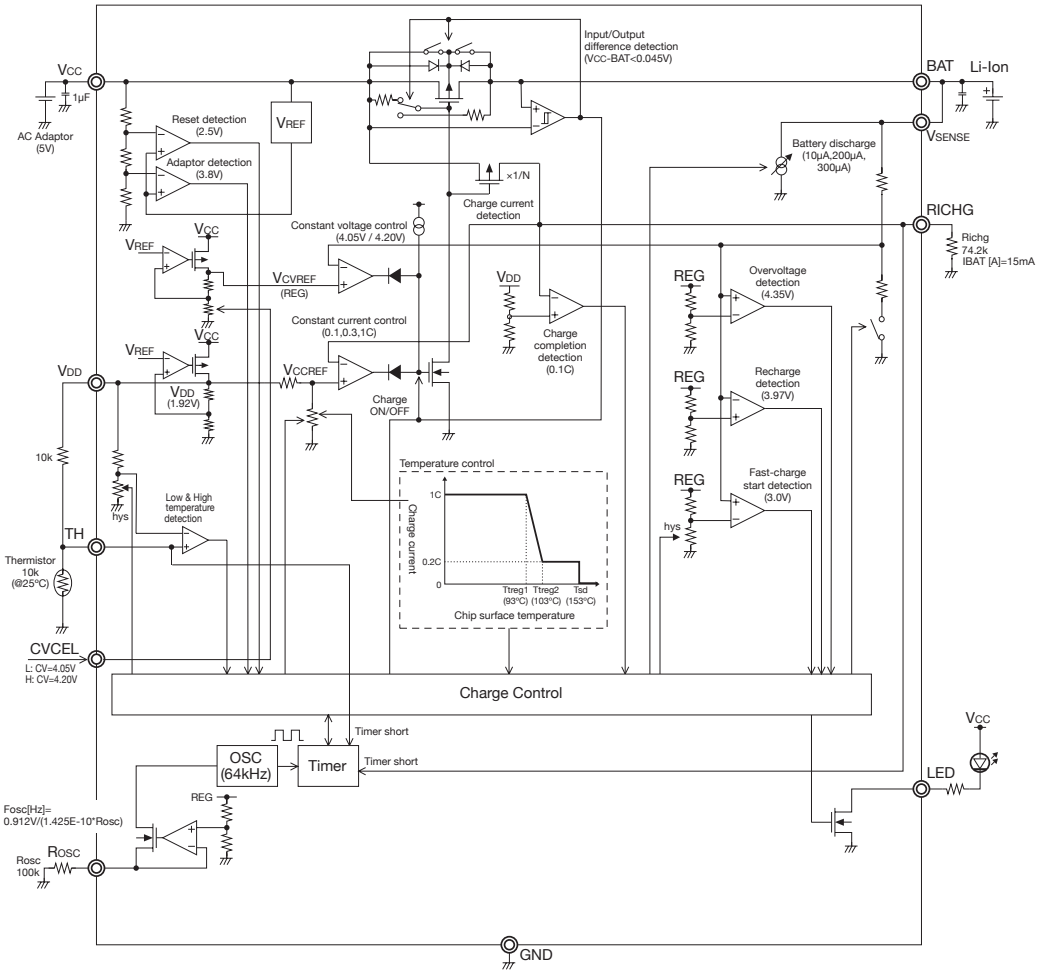

Typical application circuit

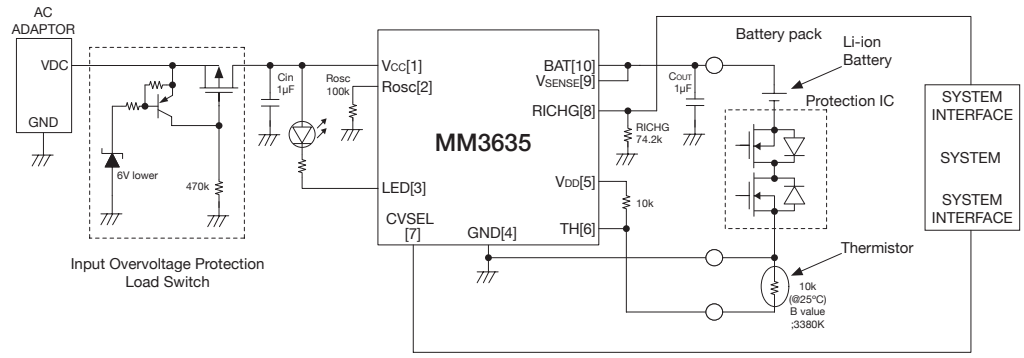

1 SECONDARY BATTERY ICs

1cell Lithium–ion battery linear charge cotrol IC /Single function

MM3835W

Outline

This IC is a linear charge control IC for 1–cell lithium–ion and lithium-polymer battery.
This IC can control accurate charge current, so it is suitable for wearable devices used low-capacitance battery.

This IC have multiple rank matched BAT regulation voltage for each battery .
Charging voltage and current can be controlled safely according to the battery temperature based on JEITA guideline.

Features

(Unless otherwise specified, Ta=25°C)

(1) BAT Regulation Voltage 4.1V, 4.2V, 4.35V
(2) Fast Charge Current .....3mA to 1000mA
(3) BAT leakage current (Input is unconnected)....100nA (max)
(4) A change pin of the charge completion current. (TERMSEL)
L/Open:1/10 of fast charge current
H: 1/20 of fast charge current
(5) Battery temperature detection function is provided via a thermistor, and so the charging voltage and current can be controlled according to the battery temperature.
(6) Chip temperature detection enables control of IC temperature rises at high-power charging. The battery can therefore be charged with optimal charging regulation.
(7) Built-in charging timer. Charging timer time can be freely set using external resistor.
(8) LED Driver .....Charging status 1ch

Applications

(1) Mobile phones , Smart phones
(2) Portable music players
(3) Tablet PCs
(4) Digital still cameras
(5) Portable games

Pin assignment

SSON-10A

(Top view)

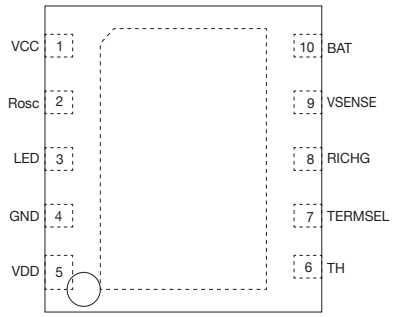

Pin no.	Symbol	Function
1	VCC	Power supply, charge Tr input pin. Connect to an AC adaptor.
2	Rosc	Oscillation frequency setting resistance connection pin fosc=0.912V/(1.425E-10*Rosc) Estimation: The fosc value for each Rosc value is specified on Data sheet.
3	LED	LED connect pin (Nch open drain output) Turn on during charging.
4	GND	Ground pin
5	VDD	Battery temperature detecting reference voltage pin It is not recommended to be used other than as battery temperature detecting reference voltage (resistance connection) since it is also used for internal charge current reference voltage.
6	TH	Battery temperature detection input pin. Connect to a thermistor.
7	TERMSEL	A change pin of the charge completion current. L/Open:1/10 of fast charge current,H: 1/20 of fast charge current
8	RICHG	Charge current setting resistance connection pin Estimation: The Charge Current value for each RICHG value is specified on product specifications.
9	VSENSE	Battery voltage detection, constant voltage charge control pin (Connect to the positive side of a battery pack)
10	BAT	Charge Tr output pin(Connect to the positive side of a battery pack)

Selection guide

Model name	Setting Current [mA]		BAT Regulation Voltage [V]	Recharge Detection Voltage [V]
	Min.	Max.		
MM3835W01RRE	3	200	4.20	3.97
MM3835W02RRE	200	1000	4.20	3.97
MM3835W03RRE	3	200	4.35	4.12
MM3835W04RRE	200	1000	4.35	4.12
MM3835W05RRE	200	1000	4.20	3.97
MM3835W06RRE	200	1000	4.35	4.12
MM3835W07RRE	200	1000	4.10	3.88

Block diagram

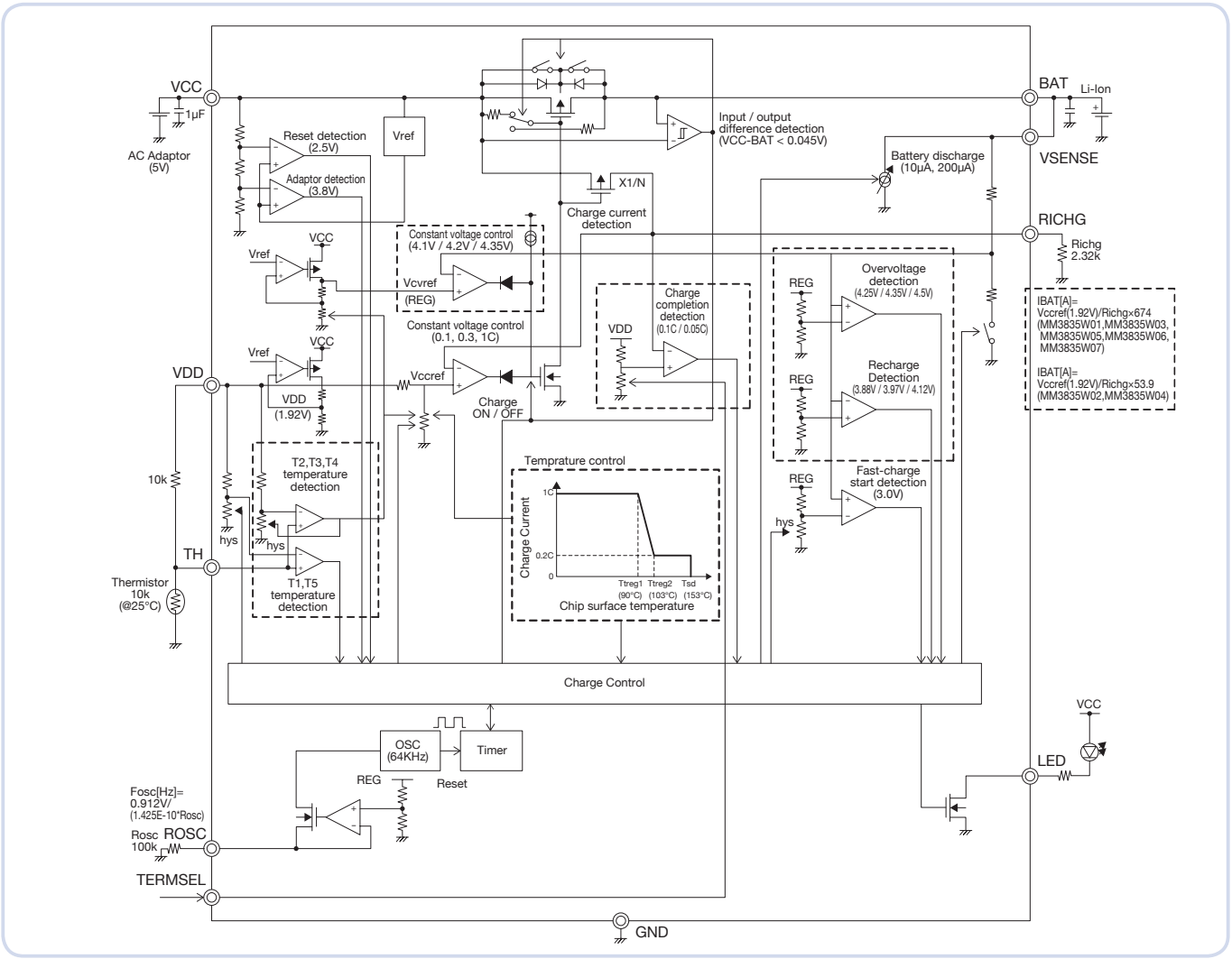

Typical application circuit

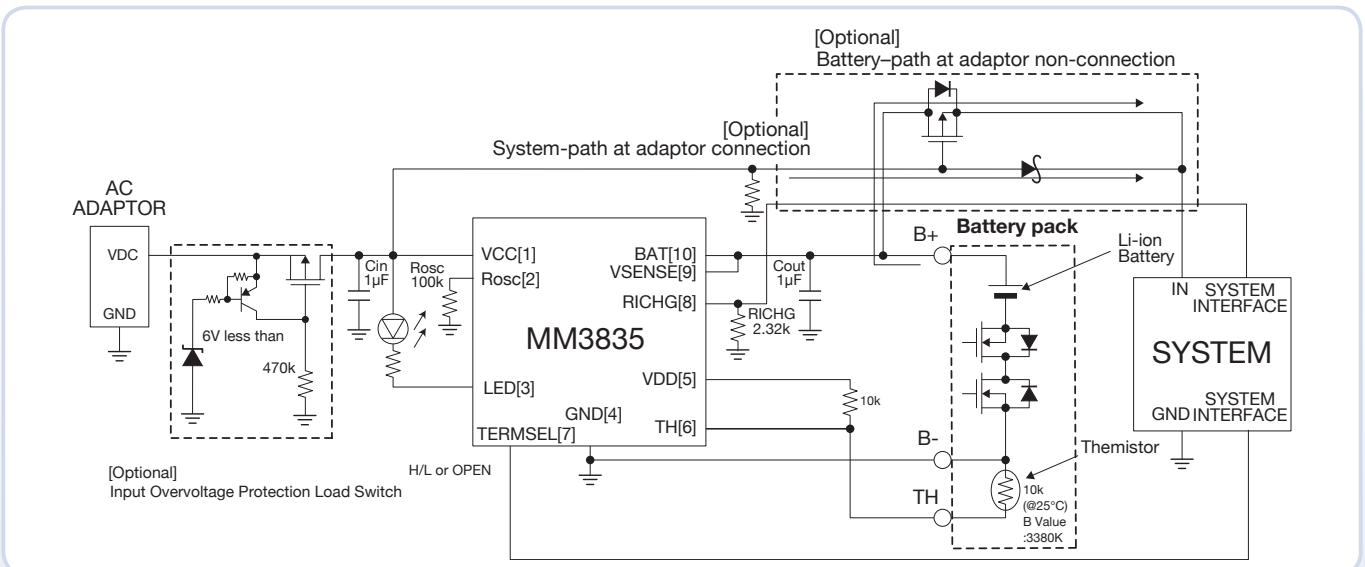

1cell Lithium–ion battery linear charge cotrol IC /Single function (For iron phosphate Li-Ion)

MM3658

Outline

This IC is a linear charge control IC for 1–cell lithium-ion phosphate battery.
The chip temperature detection function can limit the temperature rise in the IC during high power charging and the temperature detection function enables the temperature for charge to be controlled.
The package is a small size SSON-10pin.

Features

(Unless otherwise specified, Ta=25°C)

(1) BAT Regulation Voltage .....3.6V±30mV (±0.8%)
(2) Fast Charge Current .....558mA±5% (RICHG=2.32kΩ)
(3) The external resistor enables fast-charge current/charge completion current to be set
- Maximum charge current 1.5A

(4) A charge timer is embedded in this IC. The external resistor enables the charge timer to be set arbitrarily.
(5) The chip temperature detection function can limit the temperature rise in the IC during high power charging.
It can be charged at an optimal rate.
(6) The battery temperature detection function with thermistor input enable the temperature for charge to be controlled.
(7) LED Driver..... 1ch

Applications

(1) Shavers
(2) Portable Devices

Pin assignment

SSON-10A

(Top view)

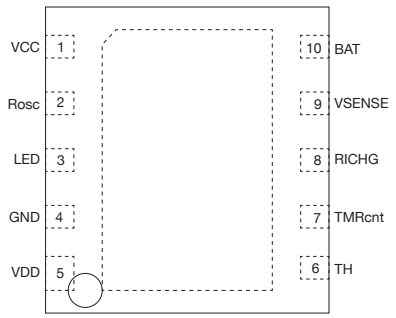

Pin no.	Symbol	Function
1	VCC	Power supply, charge Tr input pin. Connect to an AC adaptor
2	Rosc	Oscillation frequency setting resistance connection pin fosc=0.912V/(1.425E-10 Rosc) Estimation : The fosc value for each Rosc value is specified on Data sheet
3	LED	LED connect pin (Nch open drain output) Turn on during charging
4	GND	Ground pin
5	VDD	Battery temperature detecting reference voltage pin It is not recommended to be used other than as battery temperature detecting reference voltage (resistance connection) since it is also used for internal charge current reference voltage
6	TH	Battery temperature detection input pin. Connect to a thermistor
7	TMRcnt	Timer (fast charge timer) ON/OFF control pin High: Timer stops, Low/open: Timer is valid
8	RICHG	Charge current setting resistance connection pin ICHG=674×1.92V/RICHG Estimation: The Charge Current value for each RICHG value is specified on product specifications
9	VSENSE	Battery voltage detection, constant voltage charge control pin (Connect to the positive side of a battery pack)
10	BAT	Charge Tr output pin (Connect to the positive side of a battery pack)

Block diagram

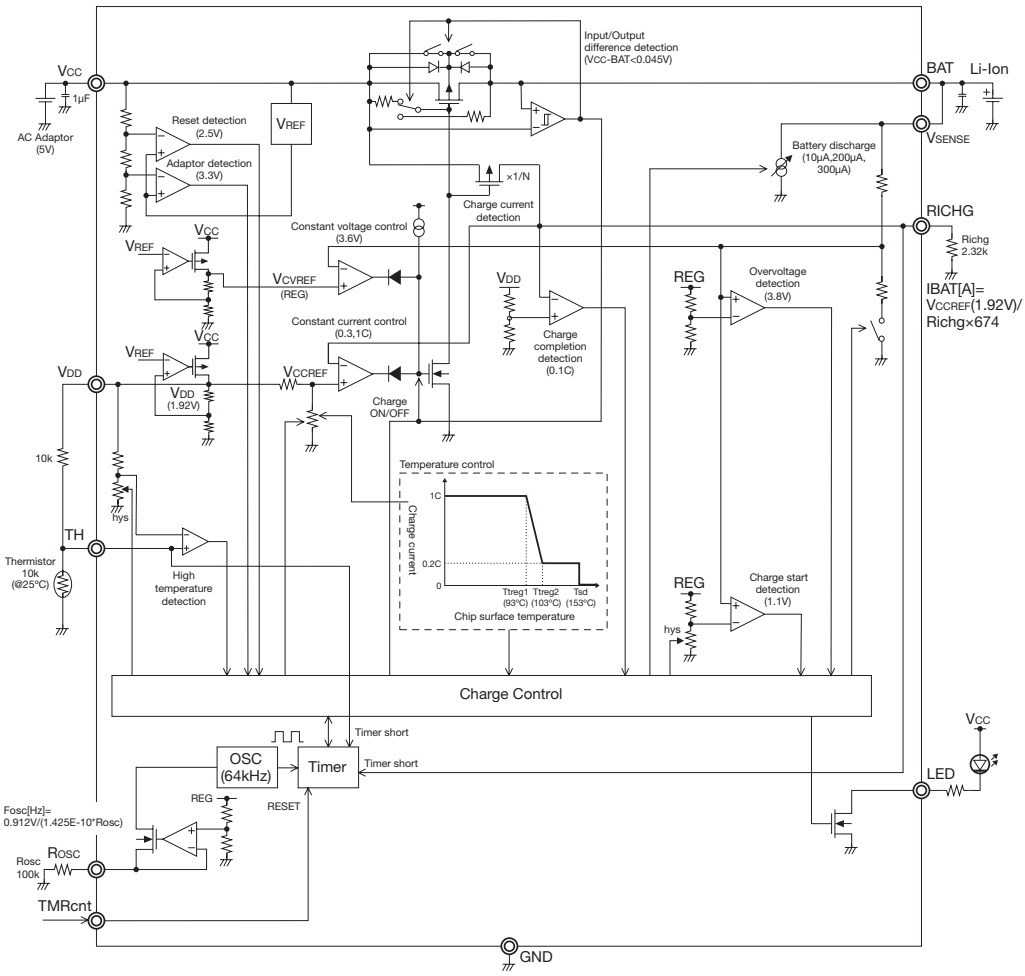

Typical application circuit

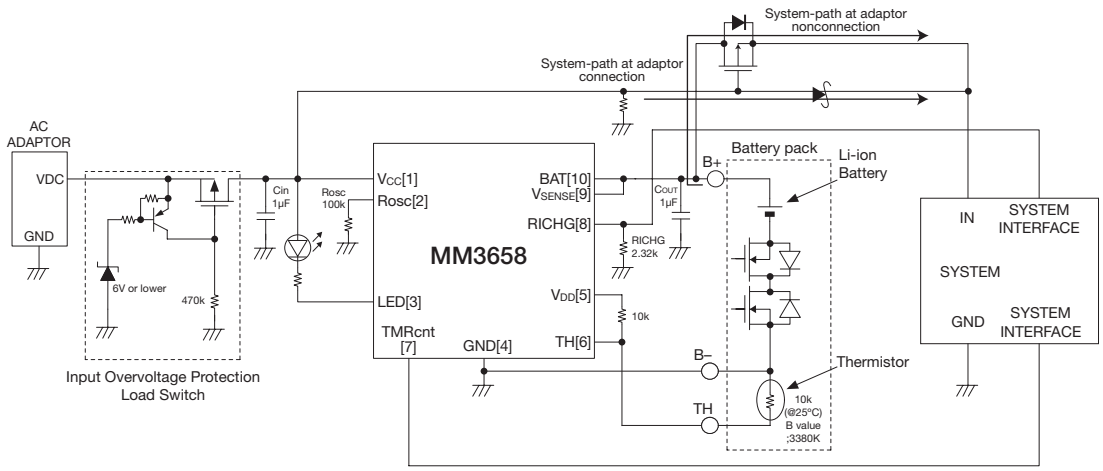

1 SECONDARY BATTERY ICs

1cell Lithium–ion battery linear charge cotrol IC /Single function (Ultra small type)

MM3865

Outline

This IC is a linear charge control IC for 1–cell lithium–ion and lithium-polymer battery. High-accuracy charging current control of 3 to 500mA is possible. It is a compact, low-consumption IC that is ideal for mobile devices with low-capacity batteries.

Features

(Unless otherwise specified, Ta=25°C)

(1) VIN Rating Voltage 13V
(2) Charging votage .....4.1V to 4.45V (50mV step)
(3) Charge current setting .....3 to 500mA
(4) Full charge detection current setting .....0.3mA to 250mA
(5) Ultra low battery leakage current .....10nA(max)
(6) Space saving package .....SSON-6E (1.8mm x 1.6mm x 0.55mm)

Applications

(1) Small mobile device(earphone, Healthcare device, others)

Pin assignment

SSON-6E

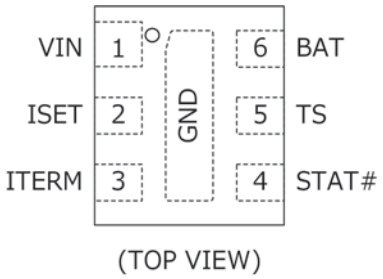

Pin No.	Pin Name	Pin Description
1	VIN	Power supply input pin for charging. Connect a DC power supply (AC adapter or USB port).
2	ISET	Charge current setting pin. Connect a register RISET to GND.
3	ITERM	Full charge current setting pin. Connect a register RITERM to GND.
4	STAT#	Charging status indicator. It is NchMOS open drain output.
5	TS	Thermistor temperature detection pin.
6	BAT	Charge current output pin. Connect to the positive side of the battery.
Exposed pad	GND	Ground pin. It also serves as a heat radiation PAD.

Selection guide

MM3865 x x x RRE

Battery temperature monitoring function
A : JEITA Compliant
B : Hot/Cold
C : Hot/Cool/Cold

Recharge function
0 : exist
1 : none

BAT regulation voltage ($V_{BATREG1}$)
1 : 4.10V
2 : 4.15V
3 : 4.20V
4 : 4.25V
5 : 4.30V
6 : 4.35V
7 : 4.40V
8 : 4.45V

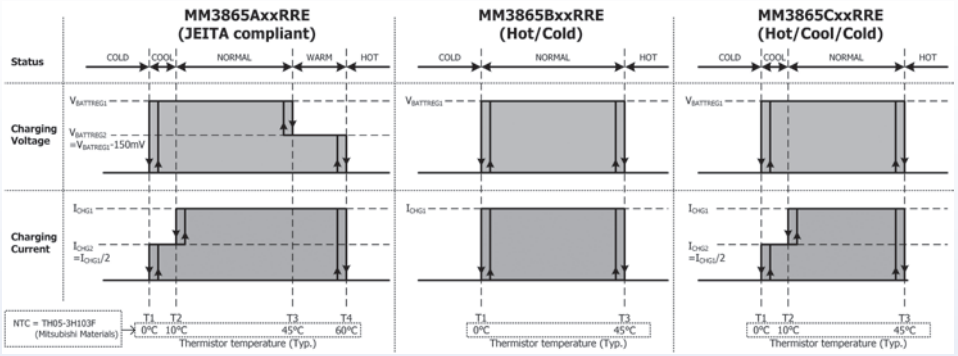

Block diagram

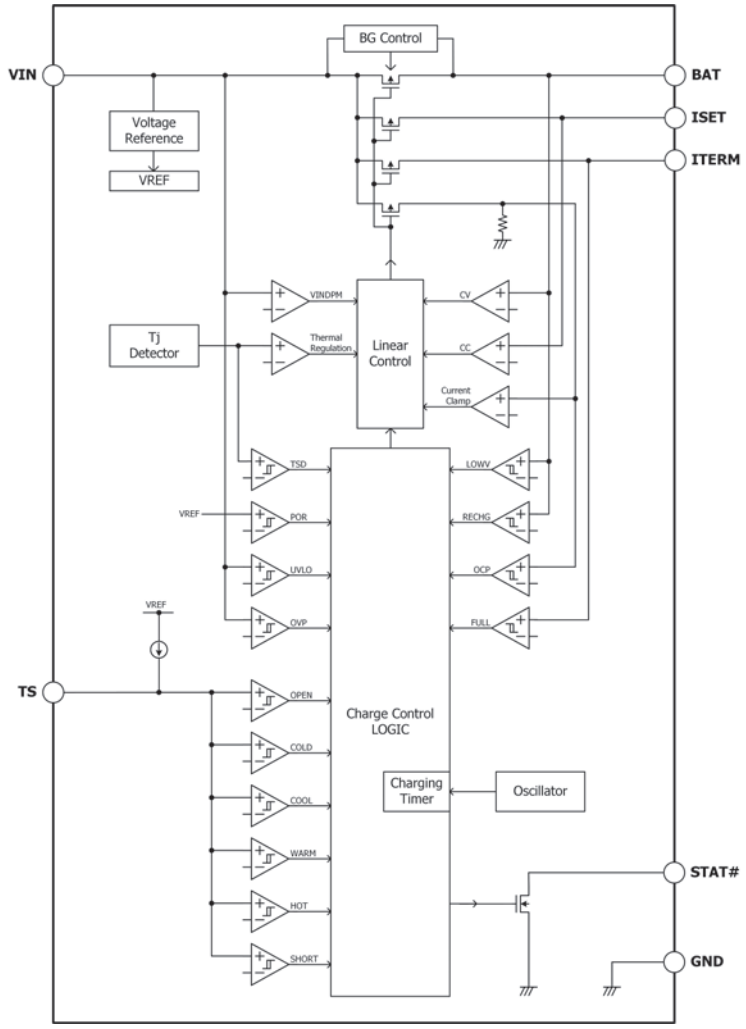

Typical application circuit

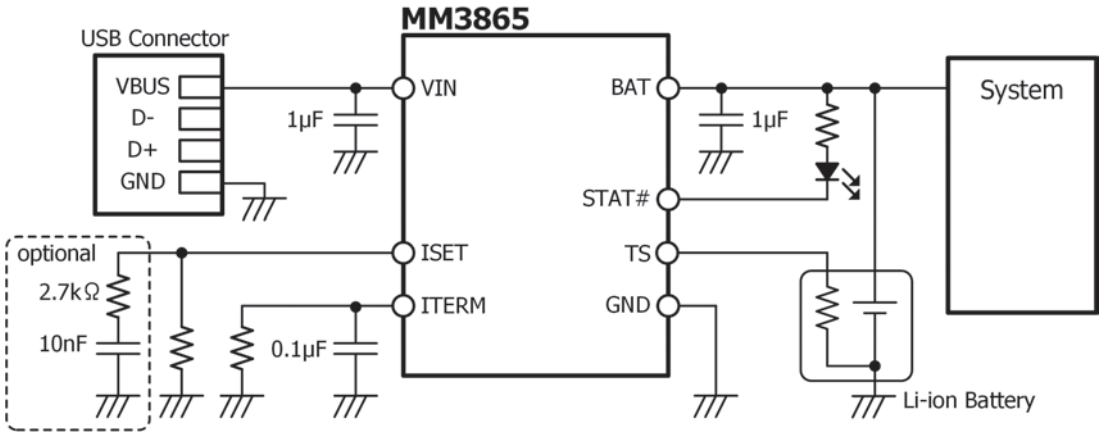

1cell Lithium–ion battery linear charge cotrol IC /built-in system-path

MM3538

Outline

This IC is a linear charging control IC with built–in system paths, and includes a chip with system path function and lithium–ion/ lithium–polymer secondary battery charging function.
The IC features a built-in load switch with overvoltage detection function and input current limit required for system paths, and built-in power FETs, backflow prevention diodes, and current sensor function required for charging and discharging.
The IC comes equipped with an adapter and USB automatic recognition function, and allows the individual settings for charging control voltage and current with I²C communication.

Features

(Unless otherwise specified, Ta=25°C)

(1) ADP/USB charging automatic identification function ..... Available (USB bus D+/D– pin)
(2) I²C bus control function ..... Available (CC/CV/Charge ON/OFF)
(3) Charging battery temperature profile ..... Supports JEITA recommendation (variable by I²C bus communication)
(4) System path current limit of ADP mode ..... Arbitrarily adjustable (ILIM pin)
(5) High Voltage input ..... Tolerates 24V (IN pin)
(6) Operating system out from battery ..... Available (built-in low on resistance FET)
(7) Linear charger control for Lithium–ion and Lithium–polymer Available
(8) Charge current setting ..... Available (ISET pin)
(9) Charge timer setting ..... Available (TMR pin)
(10) Indicator ..... Input power connected (INGOOD pin)
Charge condition (CHG pin)
BAT voltage condition (OUTGOOD pin)
I²C alarm(SAL pin)

Applications

(1) Tablet PCs
(2) Mobile phones , Smart phones
(3) Digital still cameras
(4) Portable music players
(5) Portable games

Pin assignment

WLCSP-25A

(Top view)

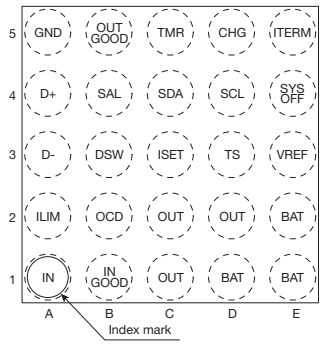

Pin no.	Function
A1	IN
A2	ILIM
A3	D-
A4	D+
A5	GND
B1	INGOOD
B2	OCD
B3	DSW
B4	SAL
B5	OUTGOOD
---	--

Pin no.	Function
C1/C2/D2	OUT
C3	ISET
C4	SDA
C5	TMR
D1/E1/E2	BAT
D3	TS
D4	SCL
D5	CHG
E3	VREF
E4	SYSOFF
E5	ITERM

Block diagram

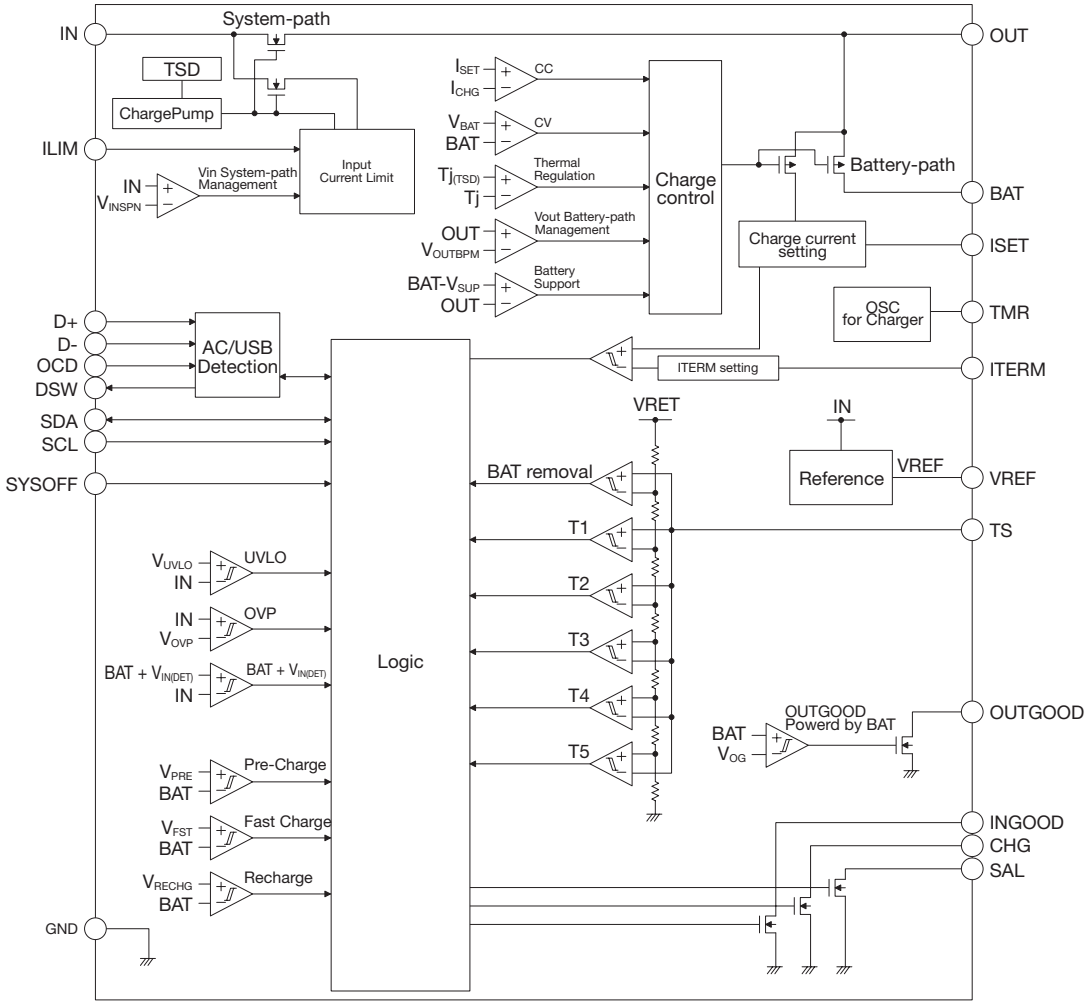

Typical application circuit

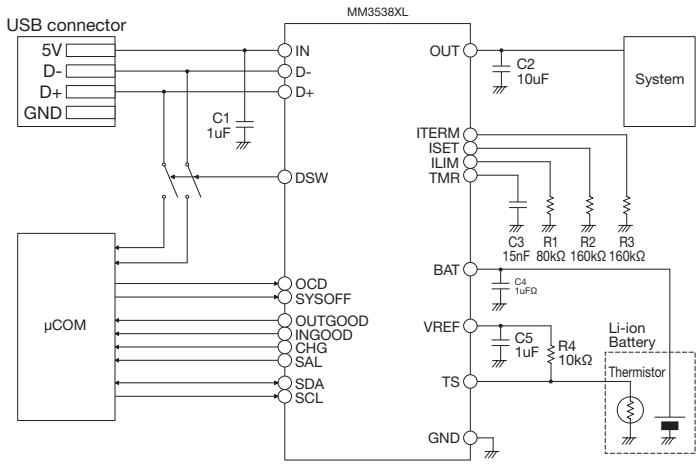

1 SECONDARY BATTERY ICs

1cell Lithium–ion battery switching charge cotrol IC /built-in system-path

MM3439

Outline

This IC contains built-in system path switch for switching between AC adaptor/USB and battery charge control function. With these functions, this IC monitors three power supplies constituted by an AC adaptor, the USB port, and lithium-ion secondary battery and controls system drive power supply and charging.
In order to implement safe and secure charging to comply with JEITA guideline, charging pressure and current can be changed when battery temperature is high or low.

Features

(Unless otherwise specified, Ta=+25°C)

(1) Synchronous buck lithium-ion/lihium-polymer charge control
(2) Built-in system path SW
(3) Overvoltage protection circuit (OVP) control function (PchMOS external controller)
(4) I²C interface allows the charging voltage, and current control and display the state (such as status and configuration of error)
(5) Compliance with JEITA guideline
(6) When the USB current limit is supported by built-in battery
(7) When charging, the system priority function
(8) To reduce heat generation during charging, Built-in thermal regulation
(9) Electrical characteristics(Unless otherwise specified, Ta=+25°C)

- Consumption current 1(ADP mode, USB mode) .....1.5mA typ. 3mA max.
- Consumption current 2(BAT mode).....30μA typ. 50μA max.
- ADP/USB UVLO.....4.20V
- VADP/VUSB OVP.....5.70V
- BAT pin voltage for CV control.....4.20V±30mV
- BAT pin voltage of overvoltage detection.....4.35V
- Current limit of USB path (100mA) .....80mA typ. 100mA max.
  (500mA).....460mA typ. 500mA max.

Applications

(1) Mobile phones, Smart phones
(2) Portable music players
(3) Tablet PCs
(4) Digital still cameras
(5) Portable games

Pin assignment

SQFN-32A

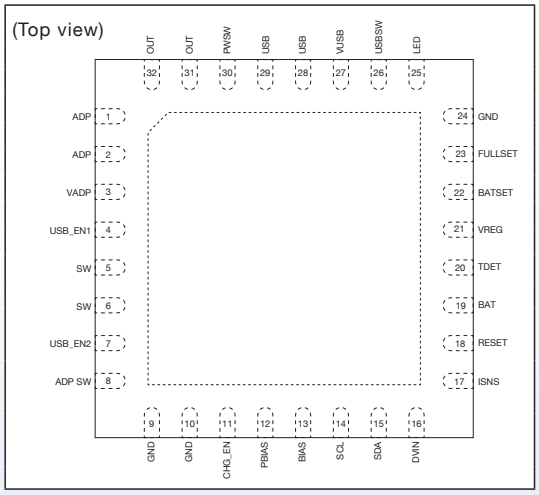

Pin no.	Symbol	Pin no.	Symbol
1	ADP	17	ISNS
2	ADP	18	RESET
3	VADP	19	BAT
4	USB_EN1	20	TDET
5	SW	21	VREG
6	SW	22	BATSET
7	USB_EN2	23	FULLSET
8	ADPSW	24	GND
9	GND	25	LED
10	GND	26	USBSW
11	CHG_EN	27	VUSB
12	PBIAS	28	USB
13	BIAS	29	USB
14	SCL	30	PWSW
15	SDA	31	OUT
16	DVIN	32	OUT

Block diagram

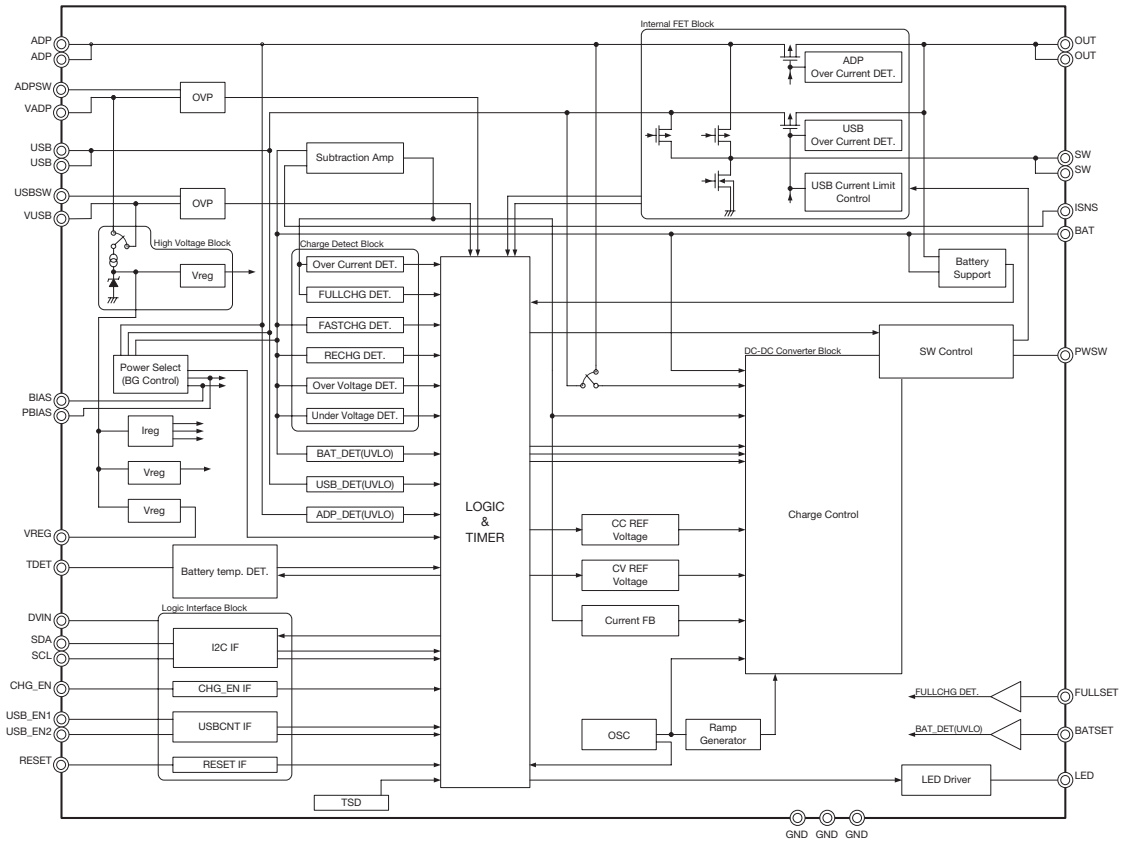

Typical application circuit

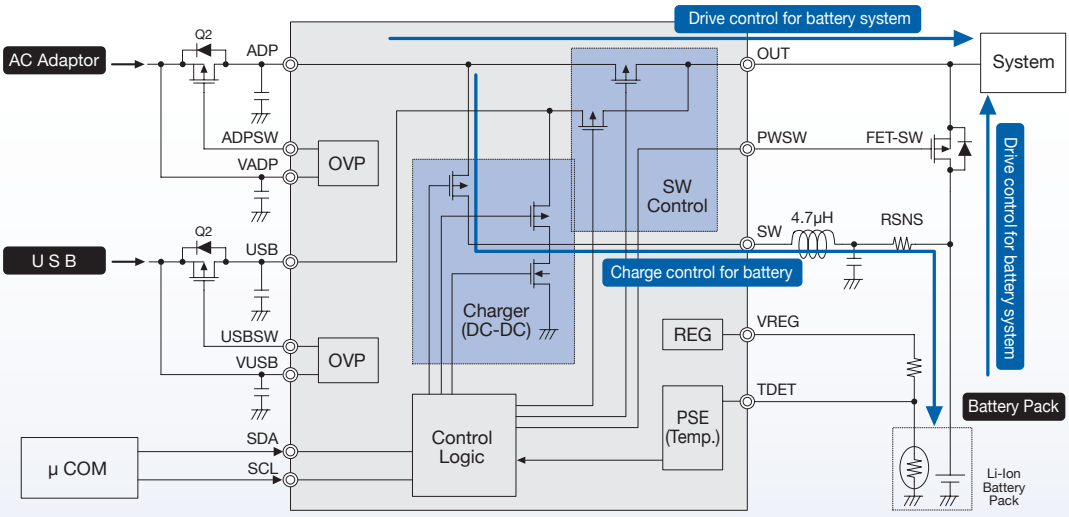

1 SECONDARY BATTERY ICs

1cell Lithium–ion battery switching charge cotrol IC /built-in system-path (included ADC/RTC)

MM3539

Outline

This IC contains built–in system path switch for switching between AC adaptor/USB and battery charge control function. With these functions, this IC monitors three power supplies constituted by an AC adaptor, the USB port, and lithium–ion secondary battery and controls system drive power supply and charging. In order to implement safe and secure charging to comply with **JEITA guideline**, charging pressure and current can be changed when battery temperature is high or low. battery status can be monitored in detail by built-in ADC for battery voltage and monitoring temperature. This IC contains built-in real time clock.

Features

(Unless otherwise specified, Ta=25°C)

(1) Synchronous Buck Lithium–ion / Lihium-polymer charge control
(2) Built-in System path SW
(3) Overvoltage protection circuit (OVP) control function (PchMOS external controller)
(4) I²C interface allows the charging voltage, and current control and display the state. (such as status and configuration of error)
(5) Compliance with JEITA guideline
(6) When the USB current limit is supported by built-in battery
(7) When charging, the system priority function
(8) To reduce heat generation during charging, Built-in thermal regulation
(9) Consumption current 1 (ADP mode, USB mode) .....1.5mA typ. 3mA max.
(10) Consumption current 2 (BAT mode).....30μA typ. 50μA max.
(11) ADP/USB UVLO.....4.20V
(12) VADP/VUSB OVP.....5.70V
(13) BAT pin voltage for CV control.....4.20V±30mV
(14) BAT pin voltage of overvoltage detection.....4.35V
(15) Current limit of USB path (100mA).....80mA typ. 100mA max.
(500mA).....460mA typ. 500mA max.
(16) ADC included.....Battery voltage (8bit), TDET pin voltage (8bit)
(17) Real time clock included

Applications

(1) Mobile phones, Smart phones
(2) Portable music players
(3) Tablet PCs
(4) Digital still cameras
(5) Portable games

Pin assignment

WLCSP-48B

(Top view)

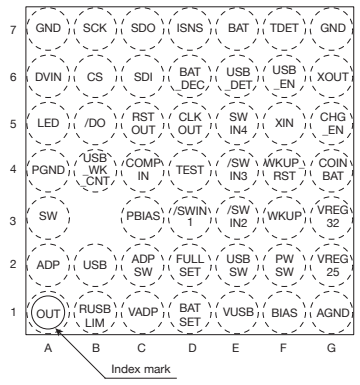

Pin no.	Symbol	Pin no.	Symbol	Pin no.	Symbol
A1	OUT	C4	COMPIN	E6	USB_DET
A2	ADP	C5	RSTOUT	E7	BAT
A3	SW	C6	SDI	F1	BIAS
A4	PGND	C7	SDO	F2	PWSW
A5	LED	D1	BATSET	F3	WKUP
A6	DVIN	D2	FULLSET	F4	/WKUP_RST
A7	GND	D3	/SWIN1	F5	CHG_EN
B1	RUSBLIM	D4	TEST	F6	USB_EN
B2	USB	D5	CLKOUT	F7	TDET
B4	USB/_WK_CNT	D6	BAT_DEC	G1	AGND
B5	/DO	D7	ISNS	G2	VREG25
B6	CS	E1	VUSB	G3	VREG32
B7	SCK	E2	USBSW	G4	COINBAT
C1	VADP	E3	/SWIN2	G5	XIN
C2	ADPSW	E4	/SWIN3	G6	XOUT
C3	PBIAS	E5	SWIN4	G7	GND

Block diagram

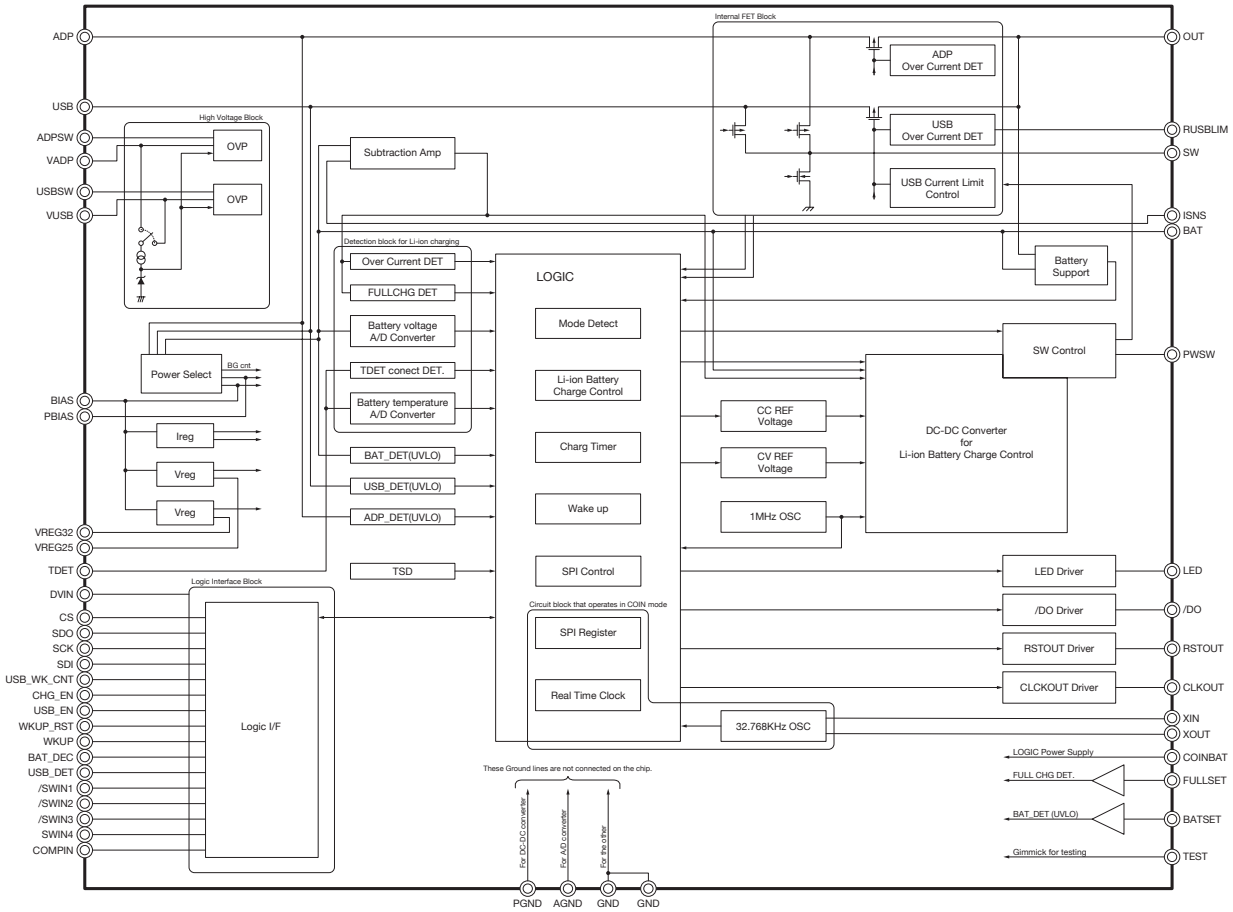

Typical application circuit

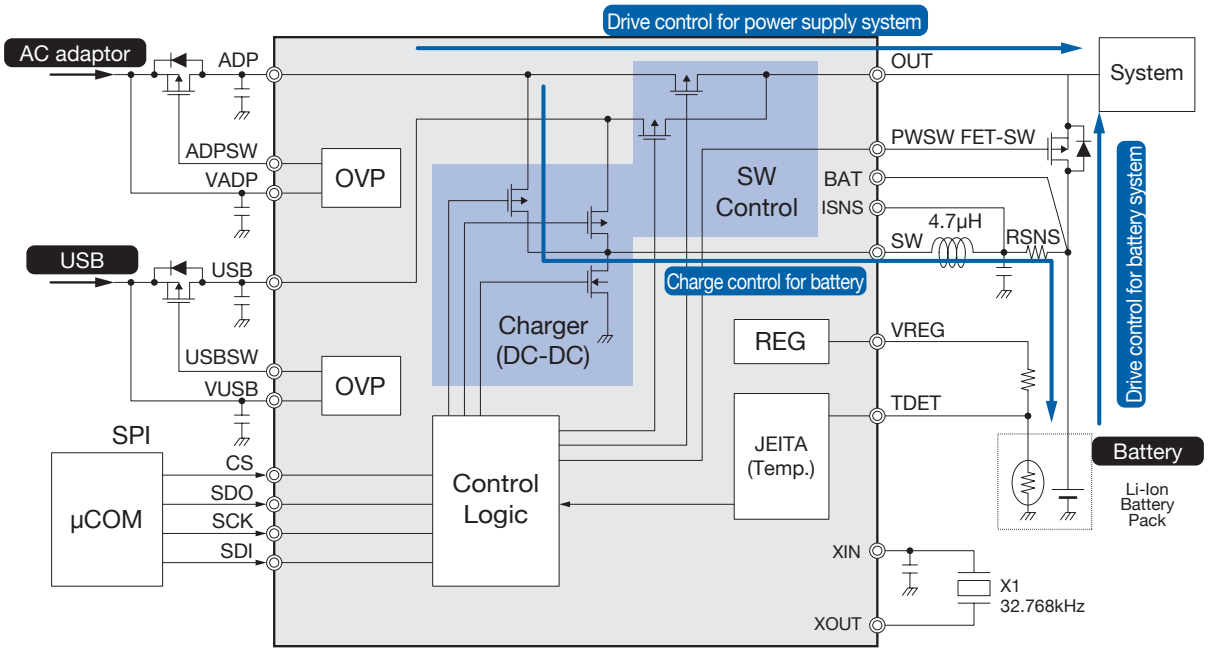

4 DISCONTINUATION INFOMATION

4 Products to be discontinued

The following products will be phased out or discontinued.
Please note that we will no longer accept any new enquires.

Part Number	Function
LAG665	Stereo Head Phone IC
LAG668	Stereo Head Phone IC
LMF501	Radio receiver IC
LVA519	Synchronous Detector IC
MM1021	Synchronous Detector IC
MM1024	Video amplifier IC for superimpose
MM1025	DRAM Back–up IC
MM1026, 1245	Battery Back–up IC
MM1027	SRAM Back–up IC
MM1028	SRAM Back–up IC
MM1029	Video amplifier IC for superimpose
MM1031	Video Amplifier IC
MM1034	HBS–Compatible Driver and Receiver
MM1035	Watchdog Timer IC
MM1038	Motor control IC
MM1041	Video Amplifier IC
MM1053	Video Switch IC
MM1060	3–Terminal regulator IC
MM1065, 1165	3–Terminal regulator IC
MM1067	Sync Separator + Sync detector IC
MM1069	Sync Separator + Sync detector IC
MM1075	Watchdog Timer IC
MM1081	SRAM Back–up IC
MM1093	4fsc Clock Generator
MM1095	Watchdog Timer IC
MM1096	Watchdog Timer IC
MM1099	Watchdog Timer IC
MM1100	COMPANDOR
MM1106	Watchdog Timer and Battery Back–up IC
MM1108	Synchronous Separator IC
MM1109	Synchronous Separator IC
MM1111~1118	Video Switch IC
MM1120	Video Switch IC
MM1124	Video Switch IC
MM1134	Battery Back–up IC
MM1135, 1136	Watchdog Timer IC
MM1140	Video Switch IC
MM1142	Watchdog Timer IC
MM1166	Video amplifier IC for superimpose
MM1177	Charge control for Coin–type Battery

Part Number	Function
MM1180, 1181	Regulator IC
MM1185	Watchdog Timer IC
MM1186	75Ω driver IC
MM1188	Video Switch IC
MM1196	75Ω driver IC
MM1203	Video Amplifier IC
MM1207, 1205	Video Amplifier IC
MM1206	Voltage Detector IC
MM1210	Voltage Detector IC
MM1215, 1216	Regulator IC
MM1222~1224	75Ω driver IC
MM1225~1228	75Ω driver IC
MM1231~1234	Video Switch IC
MM1238	Video Switch IC
MM1251, 1252, 1253	Voltage Detector IC
MM1257	3–Terminal regulator IC
MM1268	RGB Encoder
MM1288	TFT Liquid Crystal Interface IC
MM1290	Battery Back–up IC
MM1291	Li–ion Battery protection IC for 1cell
MM1292, 1302	Li–ion Battery protection IC for 2cells
MM1293	Li–ion Battery protection IC for 3cells
MM1294	Li–ion Battery protection IC for 4cells
MM1304	VCA with LPF of Y system and BPF of C system
MM1305	Voltage Detector IC
MM1311	Video Switch IC for I^2C BUS
MM1320	3–Terminal regulator IC
MM1327	Wide Video Detection IC
MM1331	DC–DC convertor IC
MM1332	Li–ion Battery protection IC for 1cell
MM1349	Switching Regulator IC
MM1357	Switching Regulator IC
MM1369	Q sound IC
MM1377, 1378	OP–AMP and Shunt Regulator
MM1381, 1382, 1383	Video Amplifier IC
MM1389	Video Switch IC
MM1426	Regulator IC
MM1437	Regulator and System Reset IC
MM159x	Regulator IC
MM1002	Video amplifier IC for superimpose

The following products will be phased out or discontinued.
Please note that we will no longer accept any new enquires.

Part Number	Function
MM6558	Dual OP–AMP
MM6564	Dual OP–AMP
PST518	System Reset IC
PST523	System Reset IC
PST529	System Reset IC
PST531	System Reset IC
PST572	System Reset IC
PST573	System Reset IC (Active–High)
PST574	System Reset IC
PST575	System Reset IC
PST591~595	System Reset IC (built–in delay circuit)
PST600	System Reset IC
PST611	System Reset IC
PST620,621	System Reset IC
PST623	System Reset IC
PST70xx	System Reset IC
PST7512,7801	Second Protect IC
PST90xx	System Reset IC
MM1270	Regulator IC
MM1301	Li–ion Battery protection IC for 1cell
MM1336	Stereo Headphones IC
MM1376	Stereo Headphones IC
MM1407	Audio IC
MM1421	Li–ion Battery protection IC for 1cell
MM1448	Composite regulator IC
MM1516	Composite regulator IC
MM1529	Secondary–side control for AC Adaptor
MM3042~3045	Regulator IC
MM3051~3055	Regulator IC
MM3002	OP–AMP
MM1581	Lithium–Ion Battery Charge Control IC
MM309x, MM310x	Regulator IC(150mA)

The information shown here is current as of February 2013.

4 Phased Out Products

The following products will be phased out or discontinued.
Please note that we will no longer accept any new enquires.
For customers who currently use the products, please contact your distributors for details on user support.

Part Number	Function
MM1333	Lithium–Ion Battery Charge Control IC
MM1373	Second Protect IC
MM1375	RGB Video Amplifier
MM1385	Regulator IC (150mA)
MM1412	Li–ion Battery protection IC for 2cells
MM1424	TCXO IC
MM1434	QXPANDER
MM1422, MM1423 MM1442, MM1443	I²C Bus Controlled 4–input 3–output AV Switch
MM1451	Second Protect IC
MM1478	Regulator IC+System Reset IC
MM1481	Regulator IC+System Reset IC
MM1482	Regulator IC+System Reset IC
MM1491	Li–ion Battery protection IC for 1cell
MM1492	I²C BUS Controlled 5–Input 2–Output AV Switch
MM1495	I²C BUS Control 5–Input 2–Output AV Switch
MM1519	Component Input Video Swich with I²C Bus
MM1522	Linear Temperature Sensor
MM1532	Lithium–Ion Battery Charge Control IC
MM1539	Video Signal Driver for DVD Players
MM1566	Video Signal Driver for DVD Players
MM157x	Regulator IC (150mA)
MM1616	Visibility Correction Light Sensor
MM1623, MM1758	Video Signal Driver for DVD Players
MM1630	I²C Bus Control Broadband Video Switch
MM1699	I²C Bus Control 13–Input 4–Output Audio Switch
MM3005~3010	CMOS Switching Regulator IC
MM302x	Regulator IC (60mA)
MM303x	Regulator IC (100mA)
PST93xx	System Reset IC
PST993,PST994	System Reset IC
MM1433	Lithium–Ion Battery Charge Control IC
PST37xx	System Reset IC
PST38xx	System Reset IC
MM1485	Lithium–Ion Battery Charge Control IC
MM1530A	Shunt Regulator
MM1538	Motor Driver IC
MM1469	Motor Driver IC
MM1669	Motor Driver IC
MM1779	PD IC for DVD Players
MM1567	Video Signal Driver for DVD
MM1568	Video Signal Driver for DVD
MM156x	Regulator IC (500mA)
MM1631	I²Cbus controlled audio switch
MM1687	Regulator IC+System Reset IC
MM1688	Regulator IC+System Reset IC
MM1689	Regulator IC (2ch)

Part Number	Function
MM1692	Video Signal Driver for DVD
MM1697	Video Switch IC
MM1707	Lithium–Ion Battery Charge Control IC
MM1729	PDIC for CD
MM1730	PDIC for DVD
MM1731~MM1734	Video Switch IC
MM1746	PDIC for CD
MM1756	Video Driver IC
MM1757	HD–compatible Video Driver IC
MM1763	AV Switch+75Ω Driver IC
MM1764	AV Switch+75Ω Driver IC
MM1783	Video Switch IC
MM1788	Video Driver IC
MM1792	Regulator IC (3ch)
MM1793	Video Switch IC
MM1794	Video Driver IC
MM1797	HD–compatible 75Ω Driver IC
MM192x	Regulator IC(1A)
MM3018	Regulator IC+System Reset IC
MM3090	Li–ion Battery protection IC for 1cell
MM3099	Li–ion Battery protection IC for 1cell
MM3112	Li–ion Battery protection IC for 2cells
MM3113	Li–ion Battery protection IC for 3cells
MM3114	Li–ion Battery protection IC for 4cells
MM314x	Regulator IC (150mA)
MM3168	VCXO IC
MM3173, MM3174	Regulator IC+System Reset IC
MM3188	Temperature Switch IC
MM329x	Regulator IC (300mA)
PST31xx	System Reset IC
PST32xx	System Reset IC
PST33xx	System Reset IC
PST34xx	System Reset IC
PST92xx	System Reset IC
MM1414	Protection for Lithium–Ion Batteries (3 to 4 cells)
MM1636	Video Driver IC
PST35xx	System Reset IC (external capacitor)
PST36xx	System Reset IC (external capacitor)
PST41xAxxx	Reset IC with Built–In Delay Circuit
PST42xAxxx	Reset IC with Built–In Delay Circuit
PST43xAxxx	Reset IC with Built–In Delay Circuit
PST44xAxxx	Reset IC with Built–In Delay Circuit
MM3204	Lithium–Ion Battery Charge Control IC

The information shown here is current as of February 2013.

5 PACKAGE

5 Packsge Line-up

Package Type	Pin Count	Package Name	Package Size (mm)			Pin Pitch (mm)	Refer Number
			He	D	A	C	
Lead–through Type	3	TO–92A	5.40	3.80	7.50	2.50	P.354
Flat Lead Type	6	SON–6A	3.00	1.60	0.80	0.50	P.337
	6	SON–6C	2.00	1.60	0.55	0.50	P.338
	6	SON–6D	3.00	2.90	0.80	0.95	P.338
	6	SON-6F	1.60	1.60	0.80	0.50	P.339
	5	SOT89–5A	4.25	4.50	1.50	1.50	P.345
Gullwing Type	8	HSOP–8A	6.20	5.00	1.55	1.27	P.322
	8	HSOP–8C	6.20	5.00	1.55	1.27	P.322
	8	HSOP-8E	6.00	5.02	1.53	0.805	P.323
	28	HSOP–28A	9.90	18.60	2.30	0.80	P.323
	28	HSOP–28C	9.90	17.60	1.90	0.80	P.324
	4	SC–82ABA	2.10	2.00	0.95	1.30	P.336
	4	SC–82ABB	2.10	2.00	0.90	1.30	P.336
	6	SC–88A	2.10	2.00	0.90	0.65	P.337
	3	SOT–23A	2.80	2.90	1.15	1.90	P.343
	5	SOT–25A	2.80	2.90	1.15	0.95	P.344
	6	SOT–26A	2.80	2.90	1.15	0.95	P.344
	6	SOT–26B	2.80	2.90	1.15	0.95	P.345
	7	SOP–7B	6.20	5.00	1.55	1.27	P.339
	8	SOP–8C	6.20	5.20	1.55	1.27	P.340
	8	SOP–8D	6.20	5.00	1.55	1.27	P.340
	8	SOP-8G	6.20	5.20	1.55	1.27	P.341
	8	SOP–8J	6.00	5.02	1.65	1.27	P.341
	10	SOP–10A	6.20	5.00	1.55	1.00	P.342
	16	SOP–16B	6.20	10.20	1.55	1.27	P.342
	28	SOP–28B	9.90	17.60	1.85	1.27	P.343
	3	TO–252C	9.90	6.60	2.30	2.30	P.354
	5	TO–252–5A	9.90	6.60	2.30	1.27	P.355
	8	TSOP–8A	3.10	2.00	0.75	0.50	P.355
	16	TSOP–16B	6.40	5.00	1.10	0.65	P.356
	16	TSOP–16D	6.40	5.00	1.10	0.65	P.356
	20	TSOP–20A	6.40	6.50	1.10	0.65	P.357
	20	TSOP–20D	6.40	6.50	1.10	0.65	P.357
	20	TSOP–20E	6.40	6.50	1.10	0.65	P.358
	20	TSOP–20F	6.40	6.50	1.20	0.65	P.358
	8	VSOP–8B	4.00	2.90	1.30	0.65	P.359
	8	VSOP–8C	4.00	2.95	1.30	0.65	P.359
	8	VSOP–8D	4.00	2.80	1.30	0.65	P.360
	20	VSOP-20A	7.60	8.66	1.63	0.635	P.360
	24	VSOP–24A	7.60	7.90	1.25	0.65	P.361

Package Type	Pin Count	Package Name	Package Size (mm)			Pin Pitch (mm)	Refer Number
			He	D	A	C	
Non–Lead Type	4	PLP-4A	1.00	1.00	0.60	0.65	P.324
	4	PLP-4B	1.60	1.20	0.60	0.60	P.325
	4	PLP-4C	1.00	1.00	0.60	0.65	P.325
	4	PLP-4D	3.20	1.70	0.48	0.925	P.326
	4	PLP-4E	2.85	1.25	0.50	0.725	P.326
	4	PLP-4-1228	2.85	1.25	0.58	0.48	P.327
	4	PLP-4-2140	4.00	2.10	0.50	0.40	P.327
	6	PLP-6A	2.00	1.80	0.60	0.50	P.328
	6	PLP-6C	0.60	1.20	1.20	0.40	P.328
	6	PLP-6F	0.60	1.50	1.50	0.50	P.329
	6	PLP-6G	2.10	4.10	0.50	0.500	P.329
	6	PLP-6H	1.70	1.80	0.50	0.500	P.330
	6	PLP-6J	1.70	1.80	0.50	0.45	P.330
	6	PLP-6-2130	0.60	3.00	2.10	0.60	P.331
	8	PLP-8E	0.60	1.60	1.20	0.40	P.331
	8	PLP-8F	3.00	2.00	0.60	0.50	P.332
	8	PLP-8G	2.40	2.60	0.60	0.50	P.332
	8	PLP-8H	1.80	1.80	0.58	0.45	P.333
	10	PLP-10A	2.50	2.70	0.60	0.50	P.333
	10	PLP-10D	3.00	3.00	0.60	0.50	P.334
	12	PLP-12A	4.00	2.90	0.60	0.40	P.334
	12	PLP-12B	3.00	3.00	0.60	0.50	P.335
	24	PLP-24A	3.00	3.00	0.60	0.40	P.335
	16	SQFN-16A	3.00	3.00	0.75	0.50	P.346
	16	SQFN-16B	3.00	3.00	0.75	0.500	P.346
	24	SQFN-24A	4.00	4.00	0.75	0.50	P.347
	32	SQFN-32A	5.00	5.00	0.75	0.50	P.347
	4	SSON-4B	1.40	1.10	0.55	0.50	P.348
	6	SSON-6A	2.00	1.80	0.75	0.50	P.348
	6	SSON-6E	1.60	1.80	0.55	0.50	P.349
	6	SSON-6J	1.40	1.40	0.55	0.50	P.349
	6	SSON-6L	2.00	2.00	0.75	0.65	P.350
	6	SSON-6M	1.40	1.40	0.55	0.50	P.350
	6	SSON-6N	3.60	1.80	0.65	0.35	P.351
	8	SSON-8B	2.30	2.30	0.75	0.50	P.351
	8	SSON-8C	3.00	3.00	0.55	0.65	P.352
	8	SSON-8E	2.00	2.00	0.75	0.50	P.352
	8	SSON-8G	1.60	1.60	0.55	0.40	P.353
	10	SSON-10A	2.50	2.70	0.60	0.50	P.353
	6	WLCSP-6B	1.09	0.81	0.38	0.40	P.361
	6	WLCSP-6C	0.38	1.09	0.81	0.40	P.362
	10	WLCSP-10A	1.50	1.10	0.28	0.40	P.362
	25	WLCSP-25A	1.936	1.936	0.345	0.40	P.363
	48	WLCSP-48B	3.47	3.47	0.40	0.50	P.363

* Recommendation Land Pattern is a reference value. To design practically, correction(s) should be made for optimized dimensions considering the effects of the board type to be mounted, mount(soldering) method, type and coating thickness of cream solder.

5 PACKAGE

Unit: mm

Package Name	Dimentional Drawing	Recommended Land Pattern
HSOP-8A	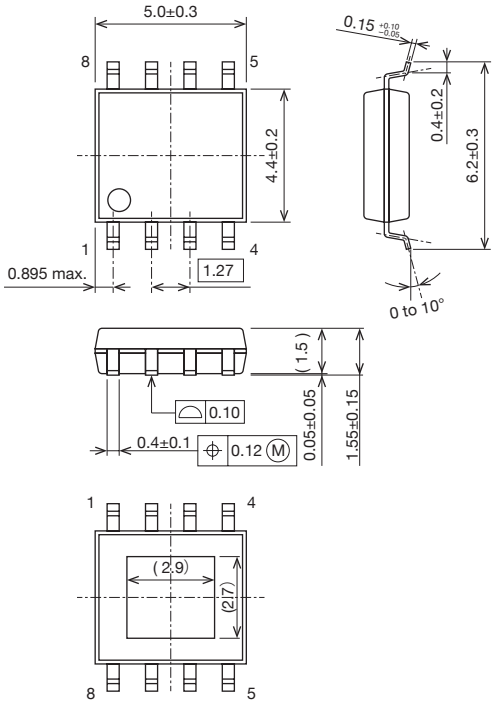	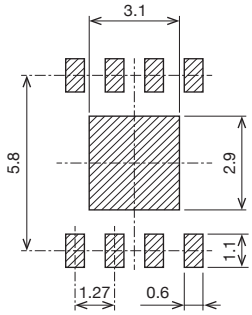
HSOP-8C	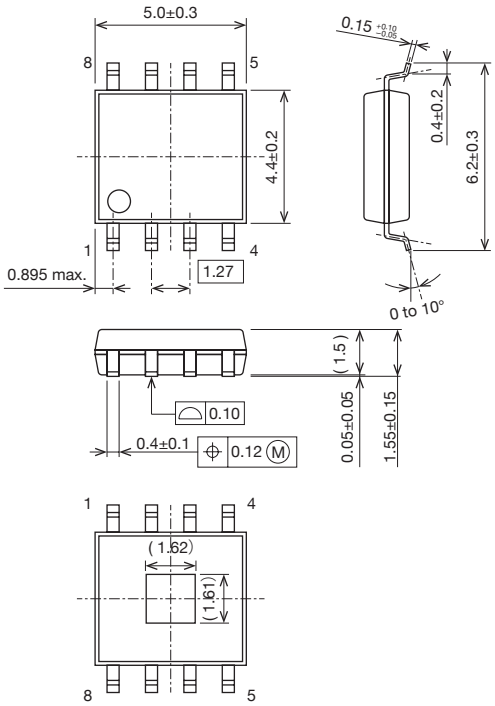	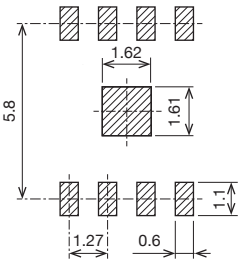

Unit: mm

Package Name	Dimentional Drawing	Recommended Land Pattern
HSOP-8E	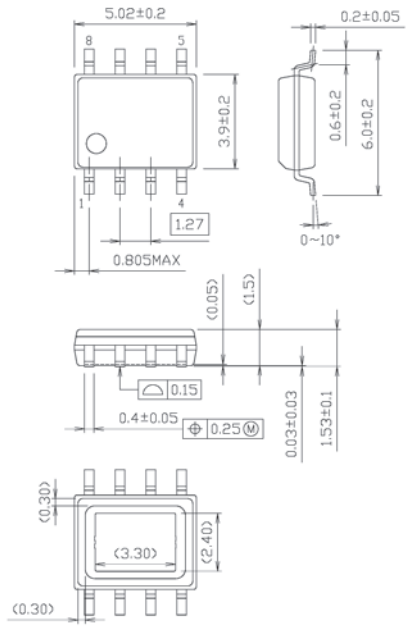	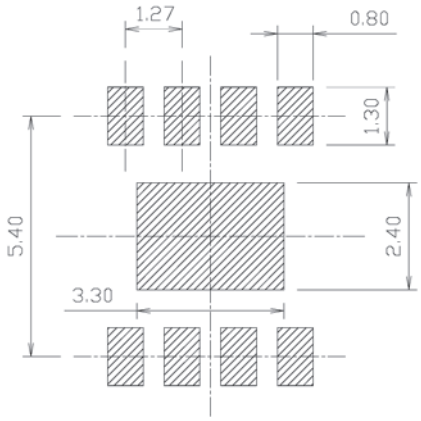
HSOP-28A	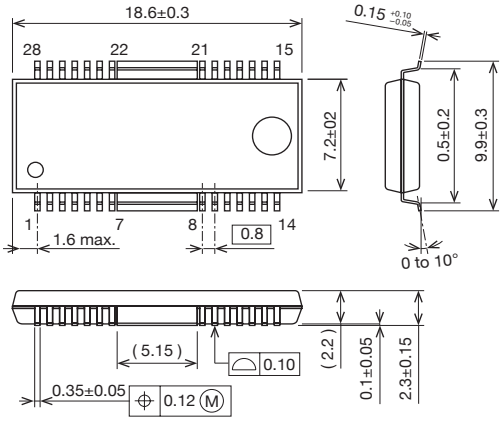	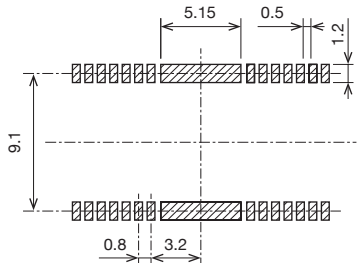

Unit: mm

Package Name	Dimentional Drawing	Recommended Land Pattern
HSOP-28C	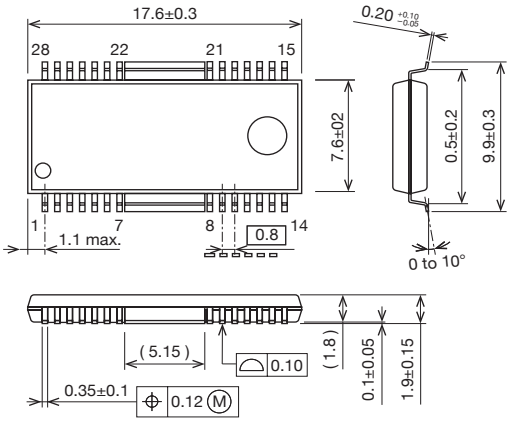	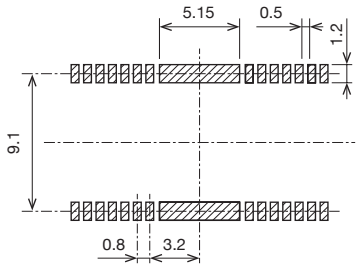
PLP-4A	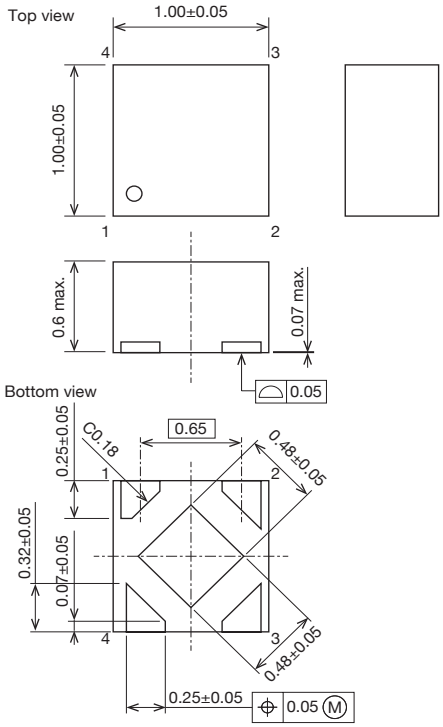	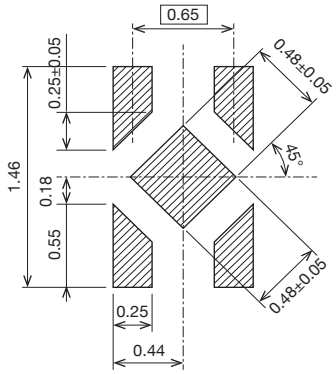

Unit: mm

Package Name	Dimentional Drawing	Recommended Land Pattern
PLP-4C	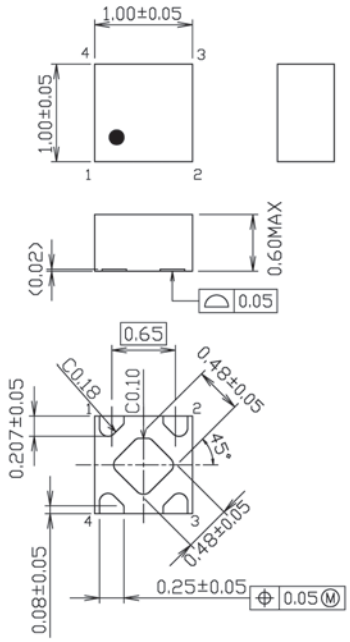	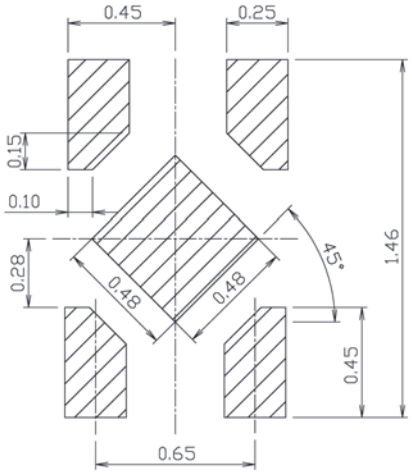
PLP-4B	Top view 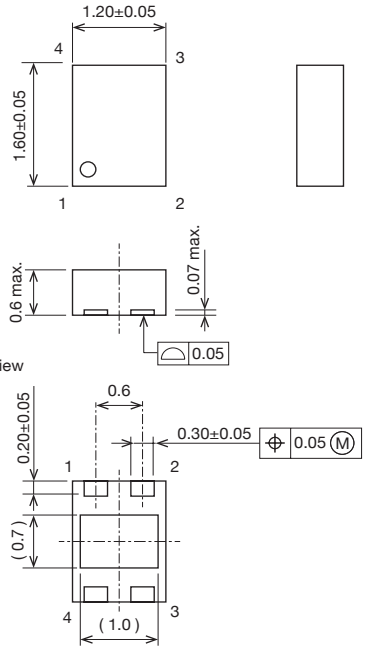	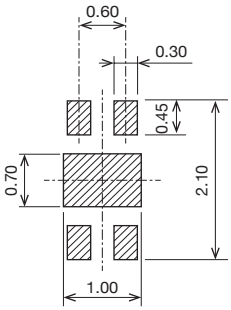

Unit: mm

Package Name	Dimentional Drawing	Recommended Land Pattern
PLP-4D	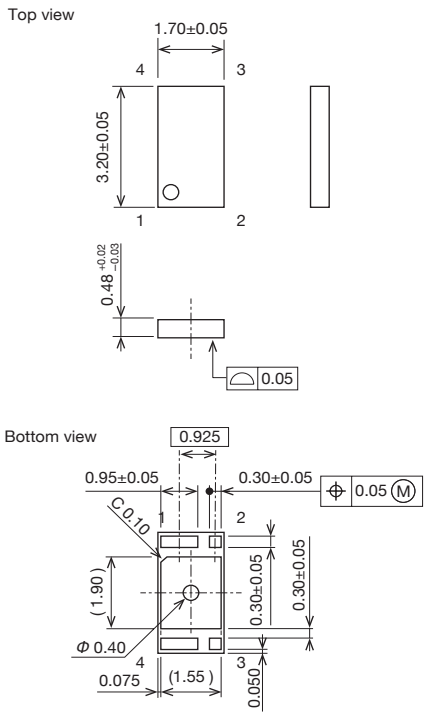	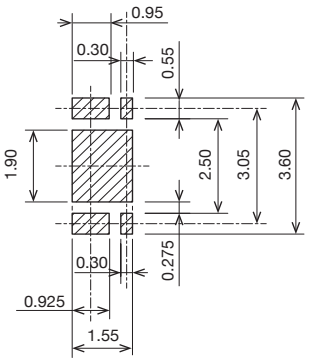
PLP-4E	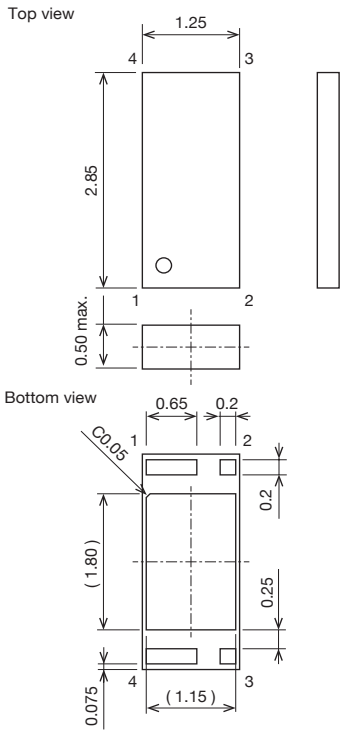	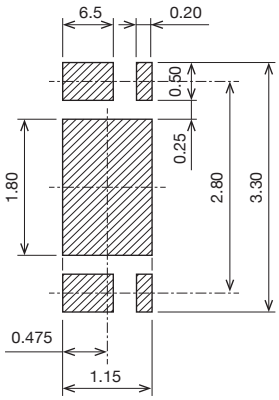

Unit: mm

Package Name	Dimentional Drawing	Recommended Land Pattern
PLP-4-1228	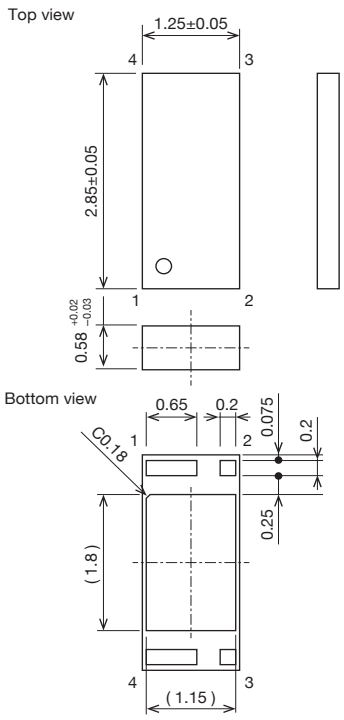	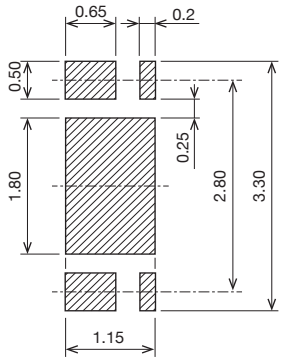
PLP-4-2140	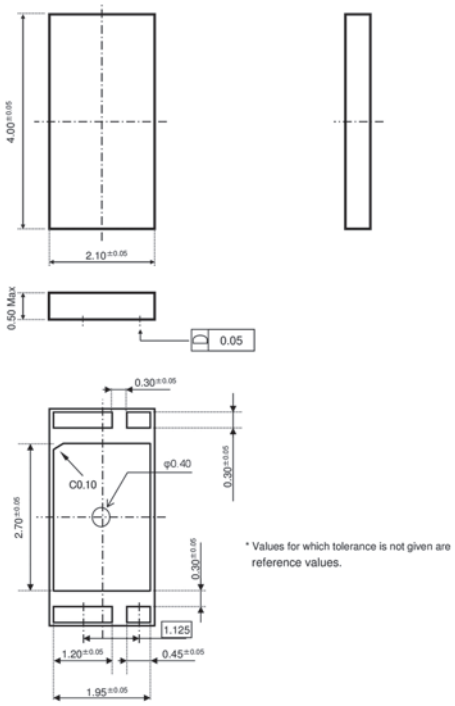	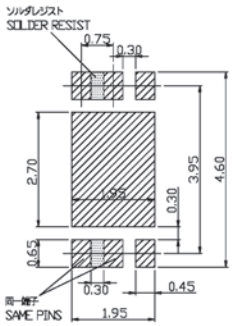

Unit: mm

Package Name	Dimentional Drawing	Recommended Land Pattern
PLP-6A	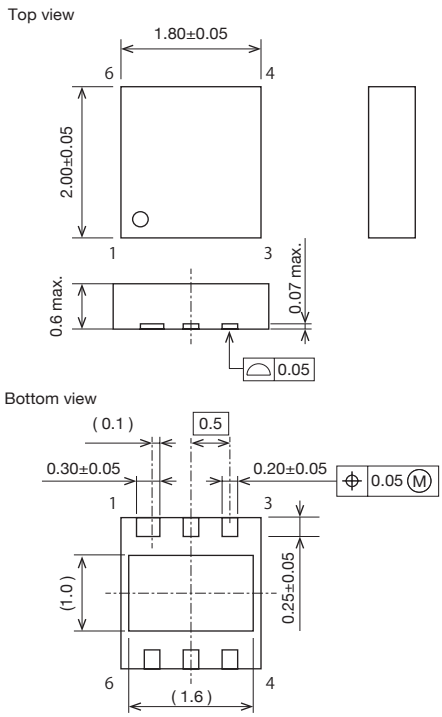	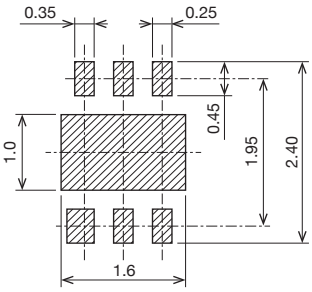
PLP-6C	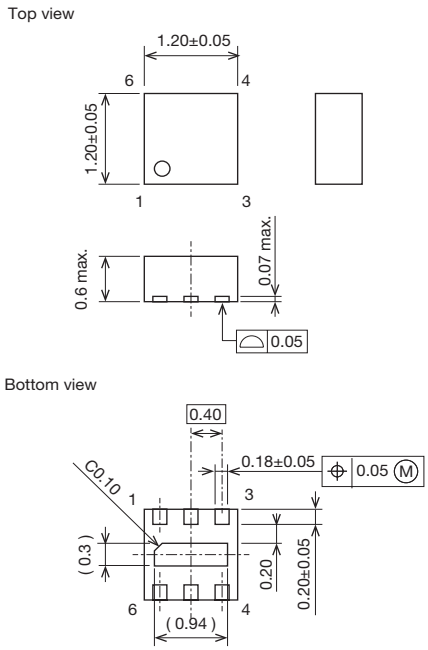	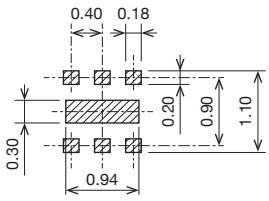

Unit: mm

Package Name	Dimentional Drawing	Recommended Land Pattern
PLP-6F	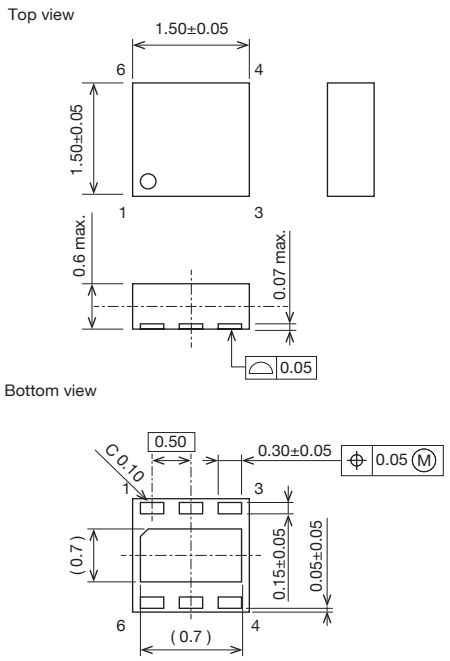	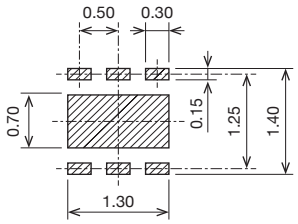
PLP-6G	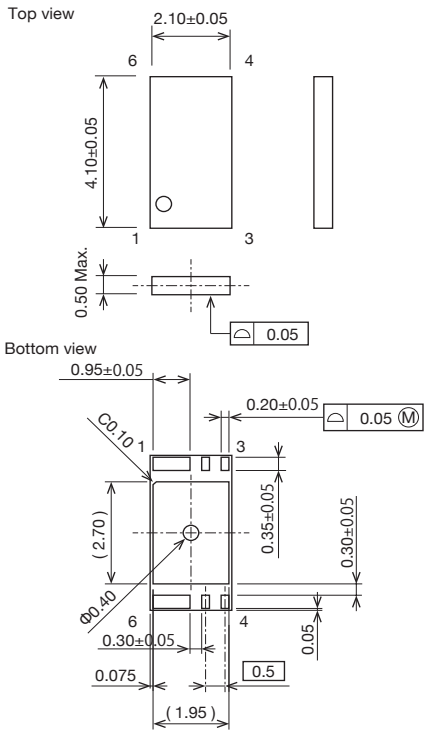	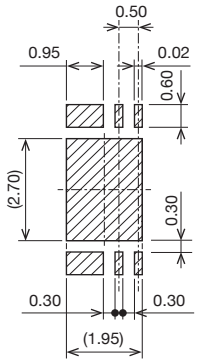

Unit: mm

Package Name	Dimentional Drawing	Recommended Land Pattern
PLP-6H	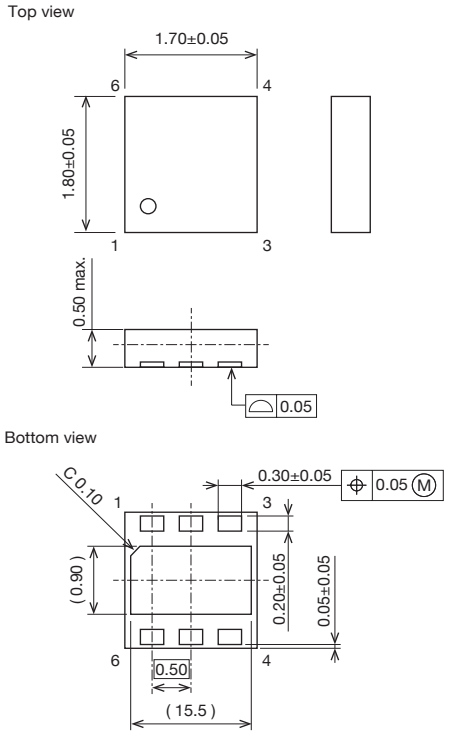	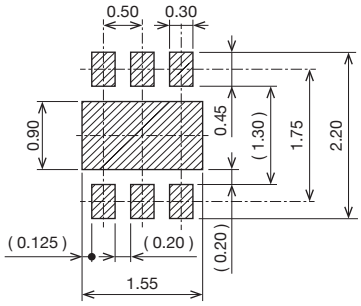
PLP-6J	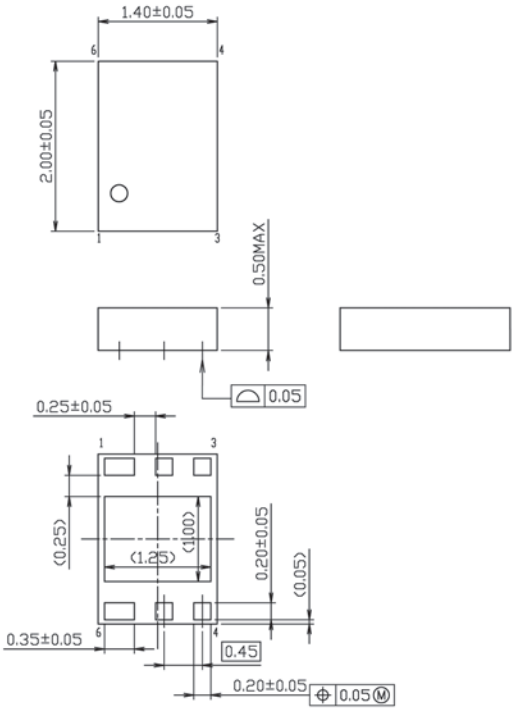	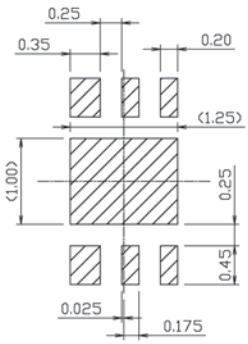

Unit: mm

Package Name	Dimentional Drawing	Recommended Land Pattern
PLP-6-2130	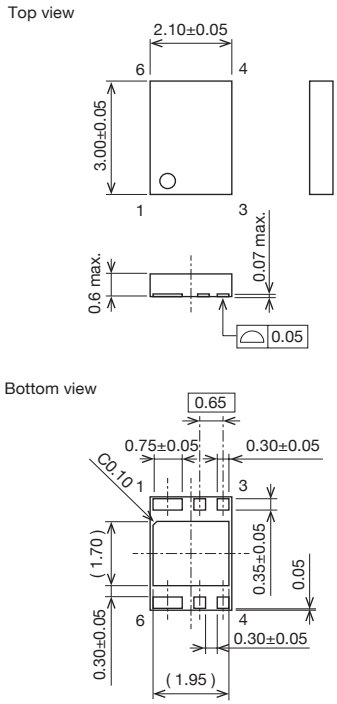	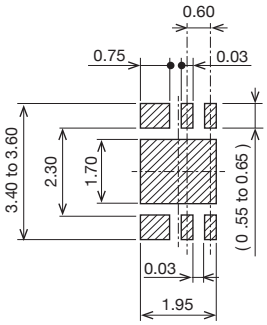
PLP-8E	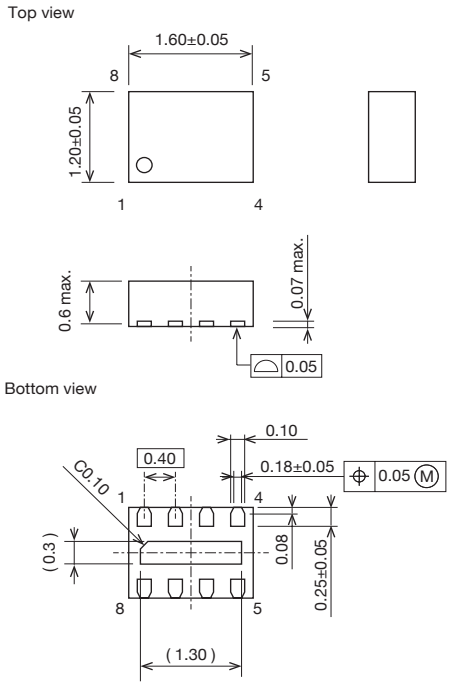	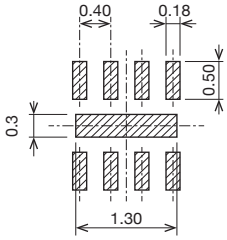

Unit: mm

Package Name	Dimentional Drawing	Recommended Land Pattern
PLP-8F	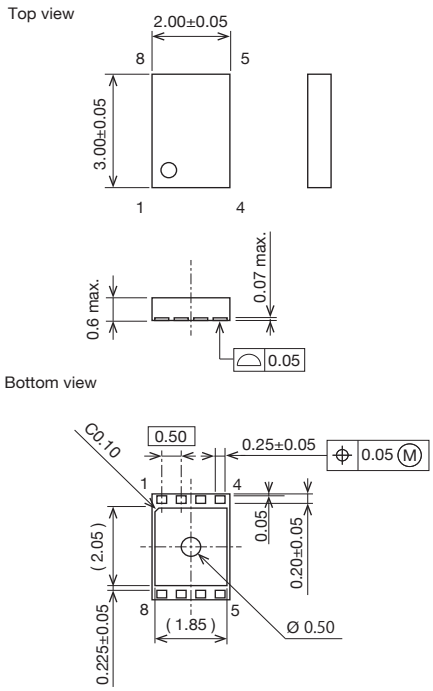	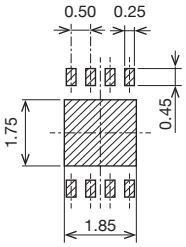
PLP-8G	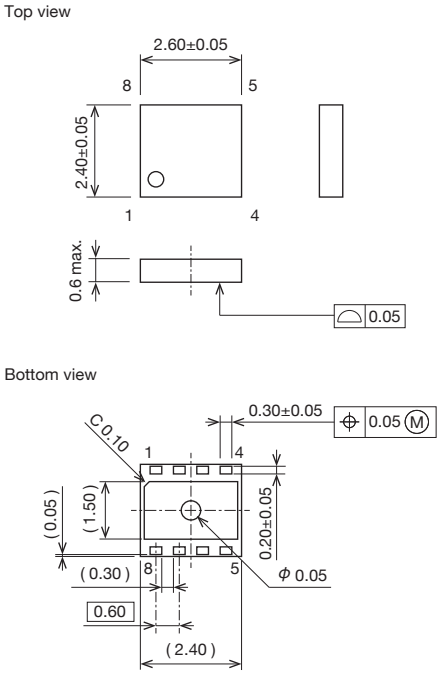	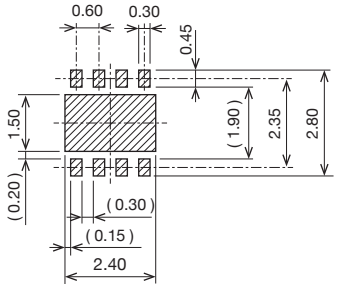

Unit: mm

Package Name	Dimentional Drawing	Recommended Land Pattern
PLP-8H	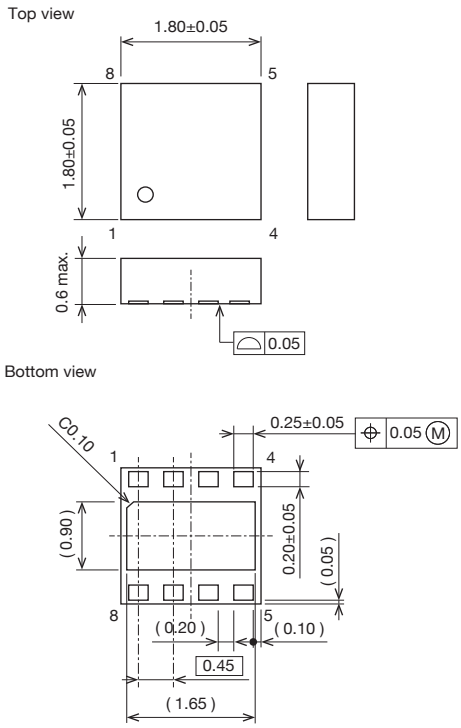	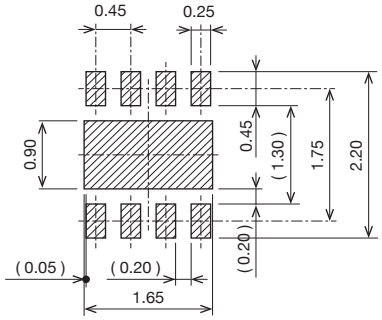
PLP-10A	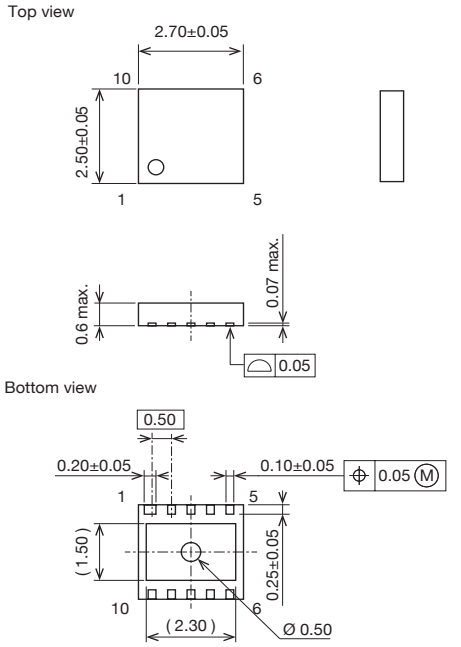	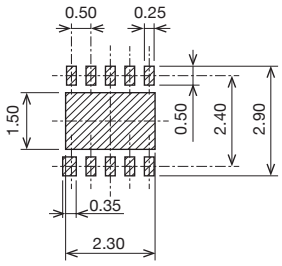

Unit: mm

Package Name	Dimentional Drawing	Recommended Land Pattern
PLP-10D	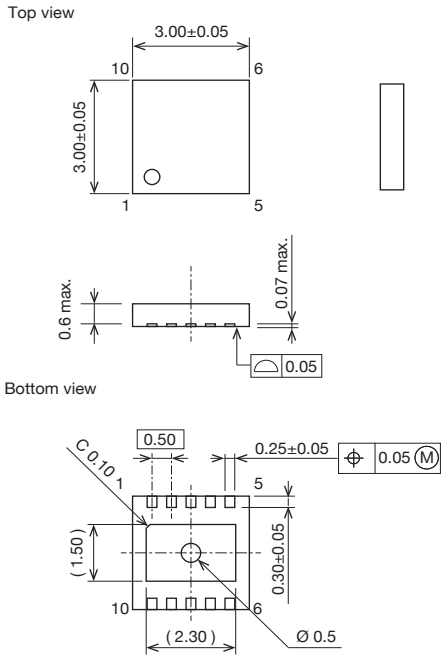	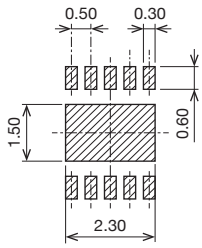
PLP-12A	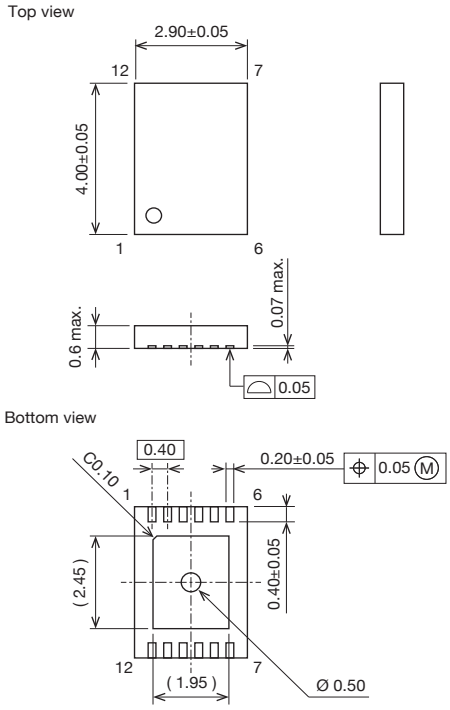	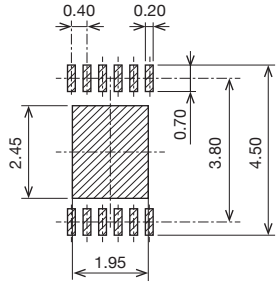

Unit: mm

Package Name	Dimentional Drawing	Recommended Land Pattern
PLP-12B	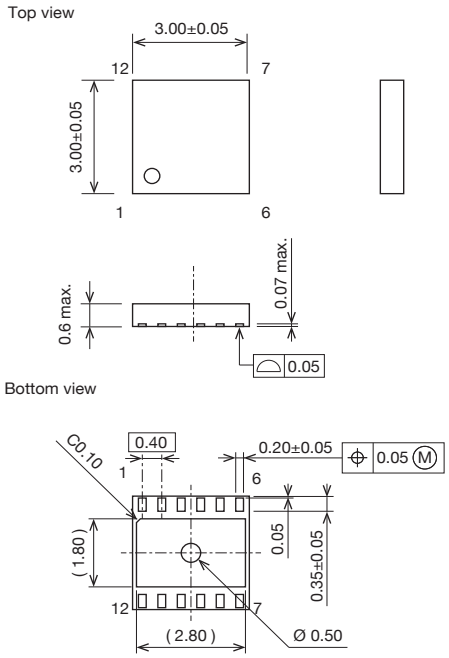	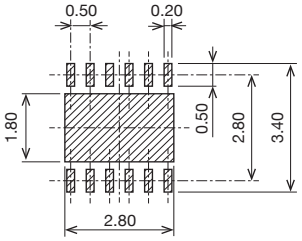
PLP-24A	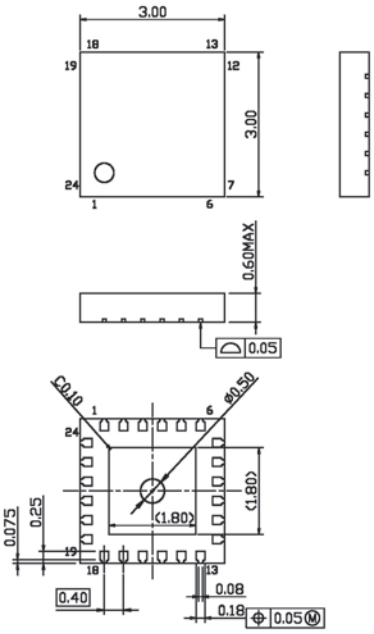	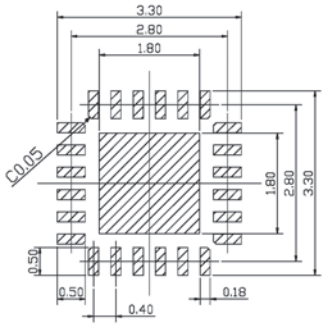

Unit: mm

Package Name	Dimentional Drawing	Recommended Land Pattern
SC-82ABA	Top view 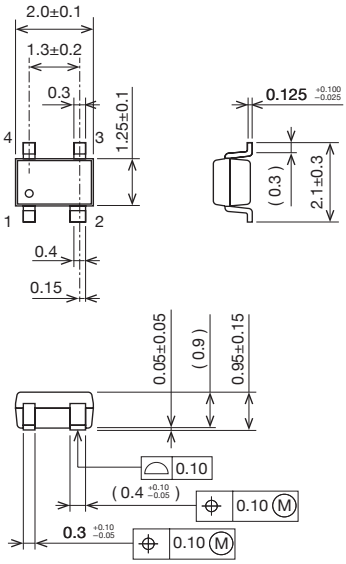	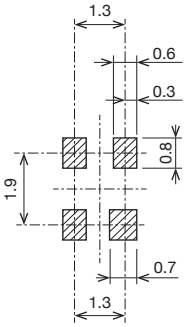
SC-82ABB	Top view 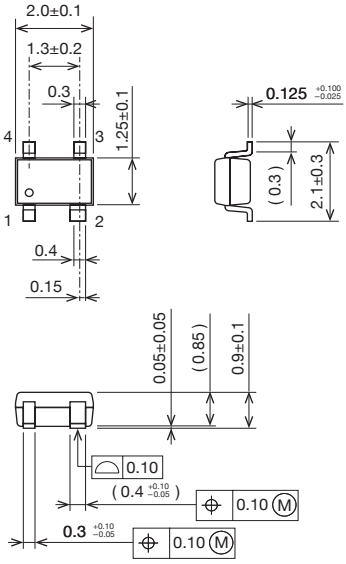	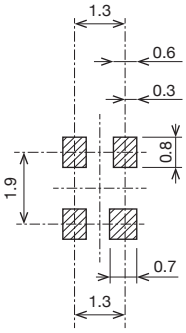

Unit: mm

Package Name	Dimentional Drawing	Recommended Land Pattern
SC-88A	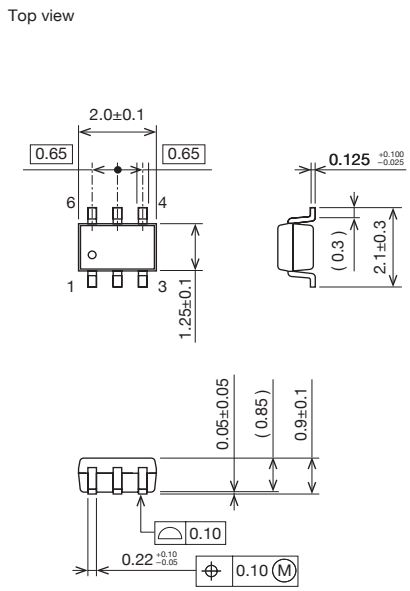	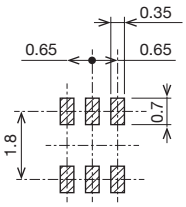
SON-6A	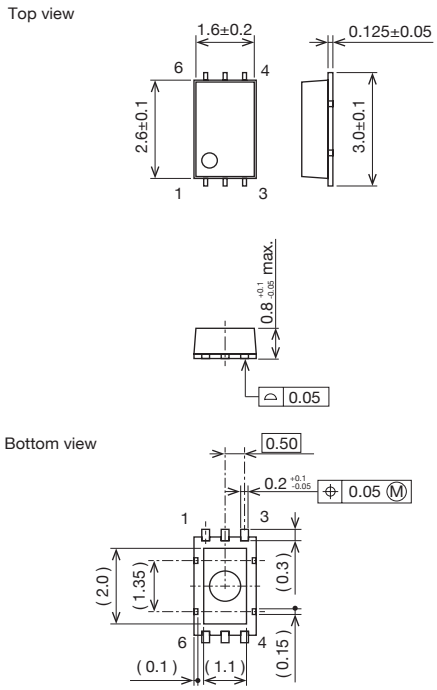	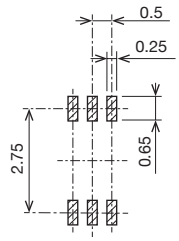

Unit: mm

Package Name	Dimentional Drawing	Recommended Land Pattern
SON-6C	Top view 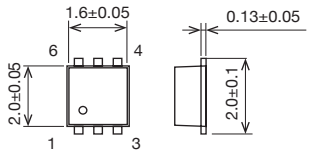 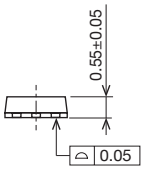 Bottom view 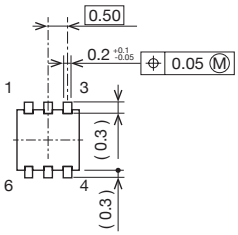 	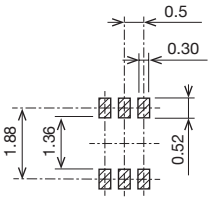
SON-6D	Top view 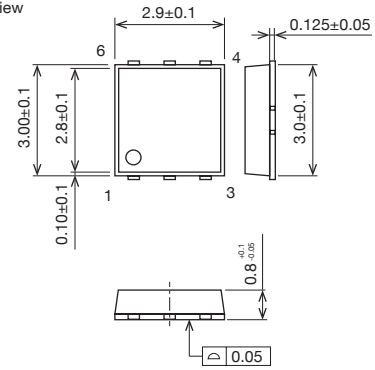 Bottom view 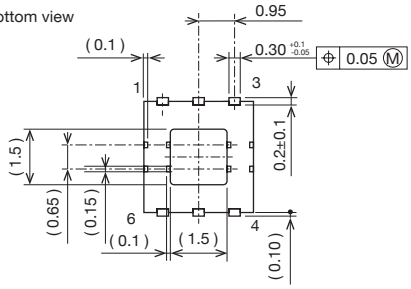 	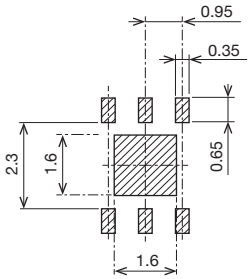

Unit: mm

Package Name	Dimentional Drawing	Recommended Land Pattern
SON-6F	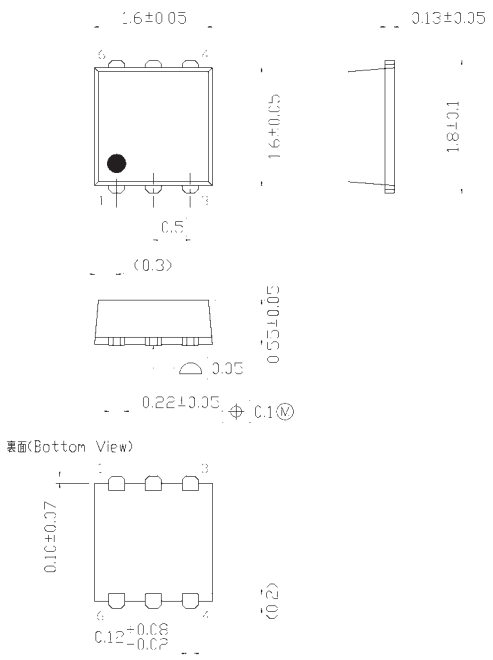	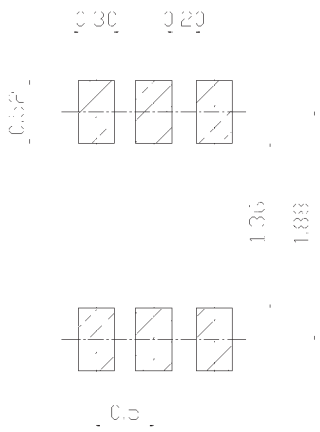
SOP-7B	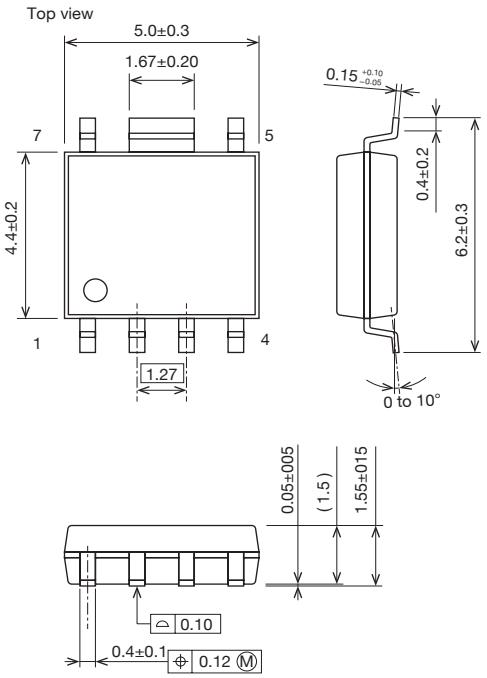	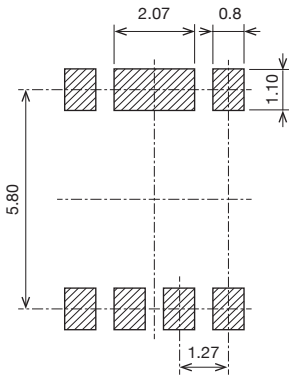

Unit: mm

Package Name	Dimentional Drawing	Recommended Land Pattern
SOP-8C	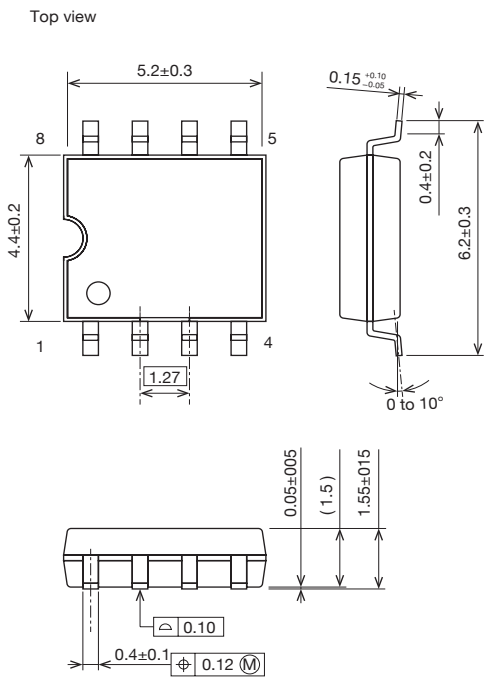	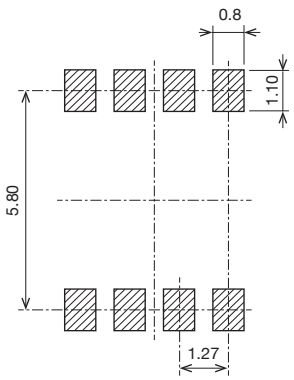
SOP-8D	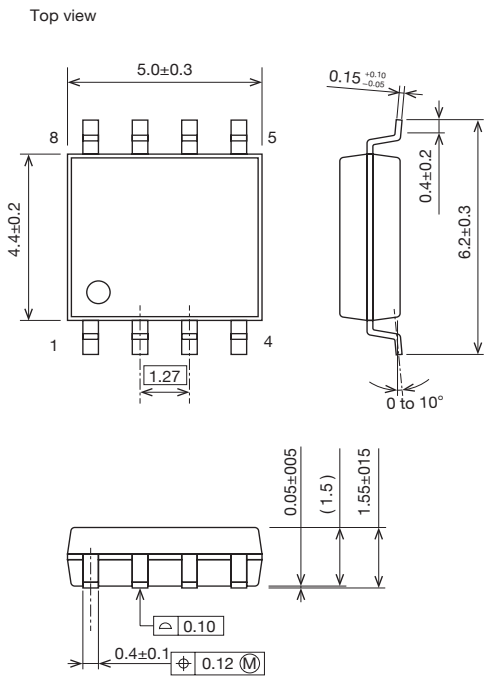	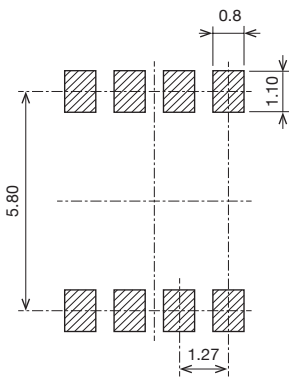

Unit: mm

Package Name	Dimentional Drawing	Recommended Land Pattern
SOP-8G	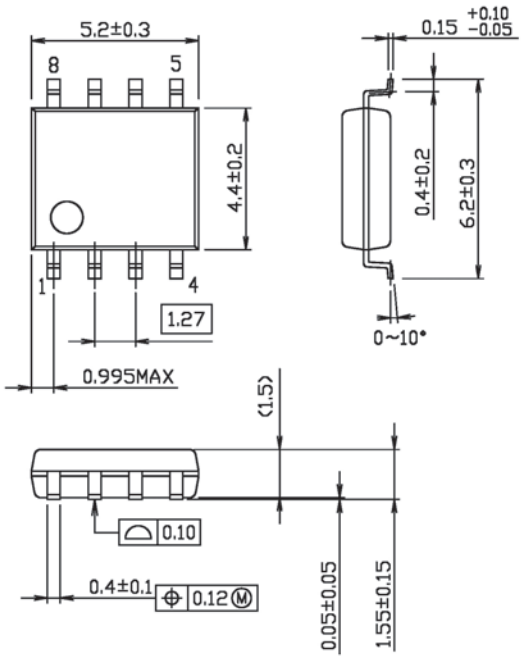	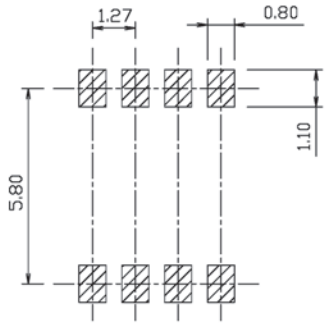
SOP-8J	Top view 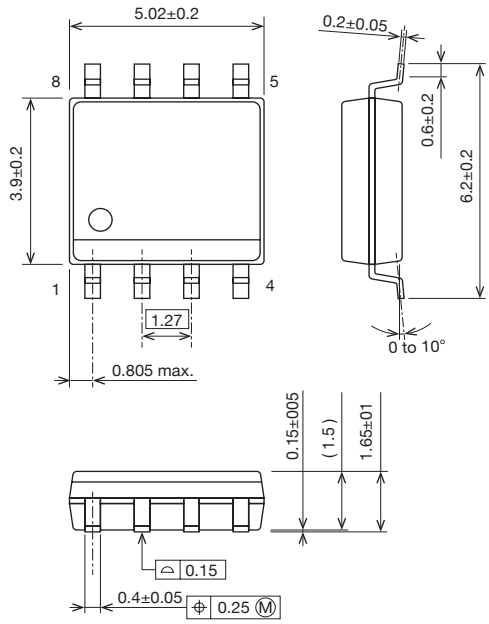	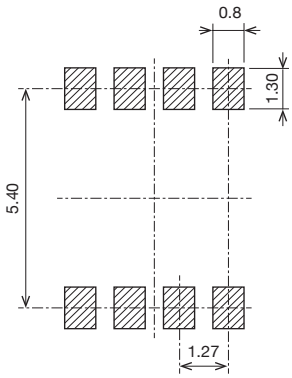

Unit: mm

Package Name	Dimentional Drawing	Recommended Land Pattern
SOP-10A	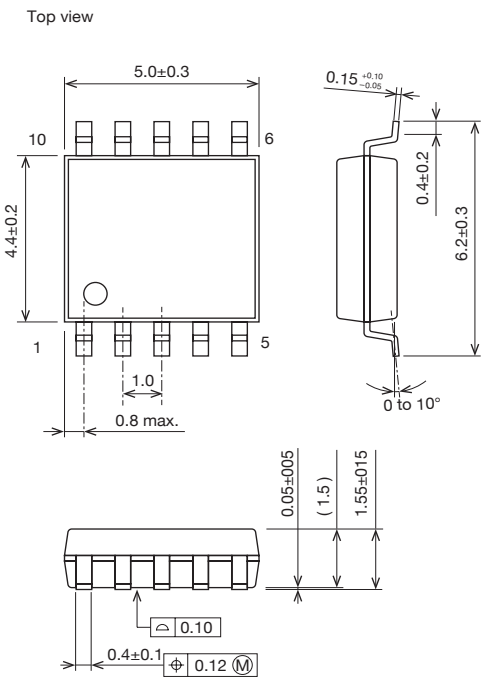	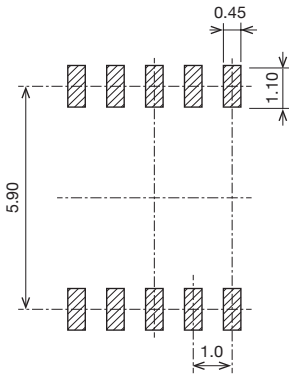
SOP-16B	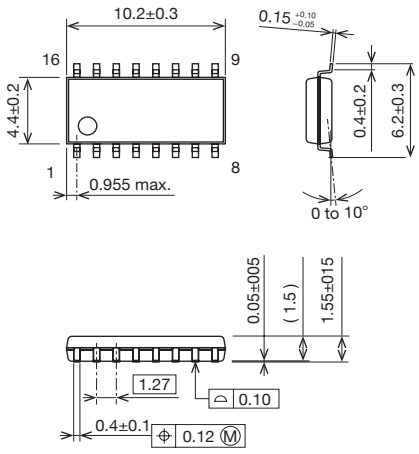	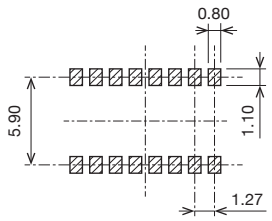

Unit: mm

Package Name	Dimentional Drawing	Recommended Land Pattern
SOP-28B	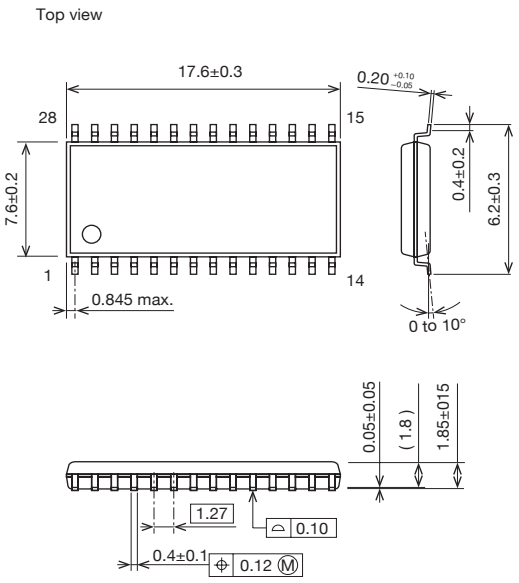	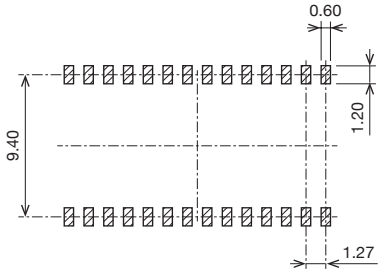
SOT-23A	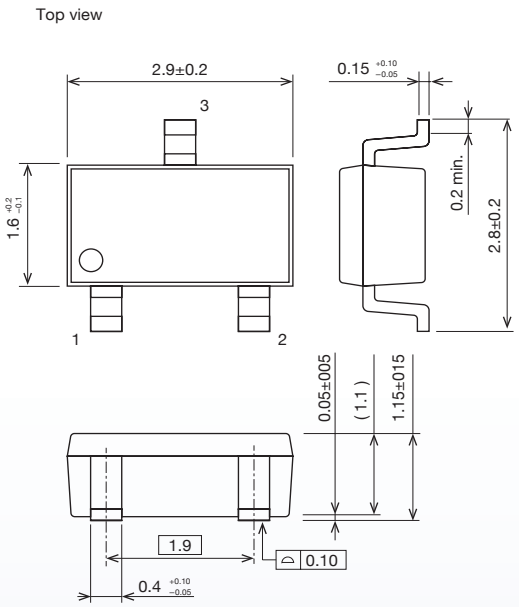	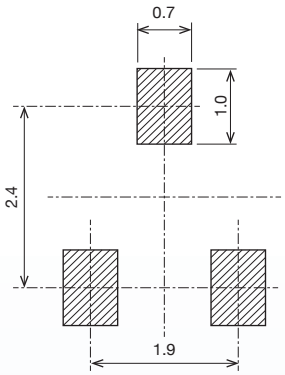

Unit: mm

Package Name	Dimentional Drawing	Recommended Land Pattern
SOT-25A	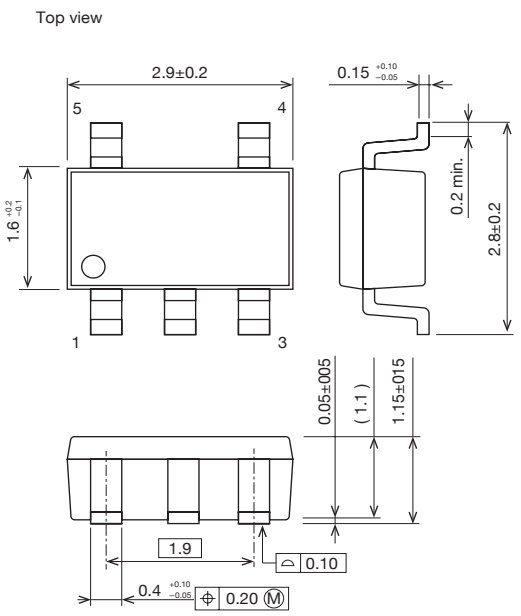	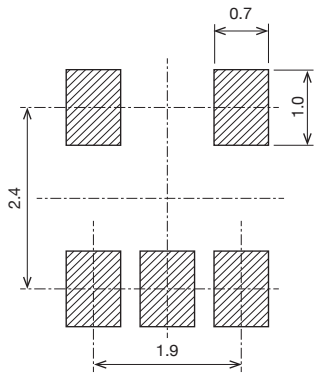
SOT-26A	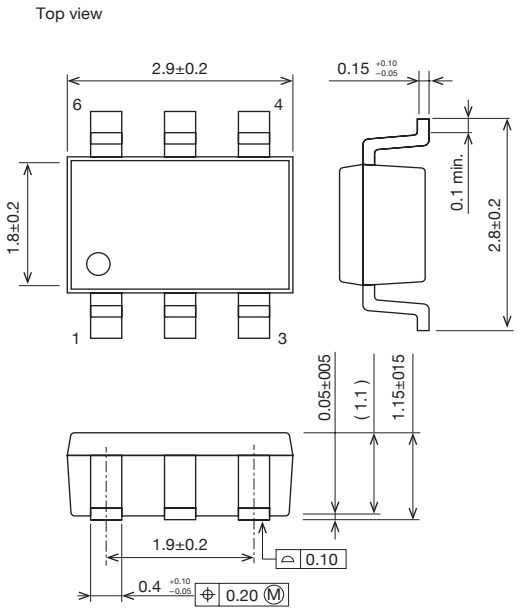	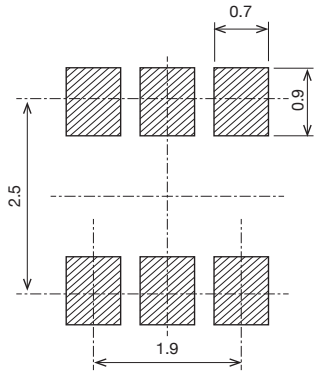

Unit: mm

Package Name	Dimentional Drawing	Recommended Land Pattern
SOT-26B	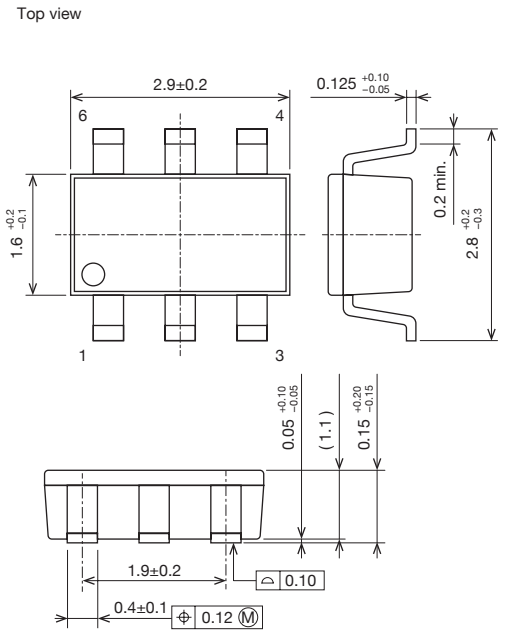	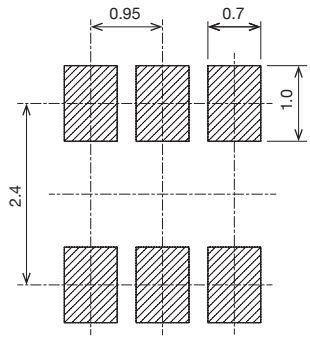
SOT89-5A	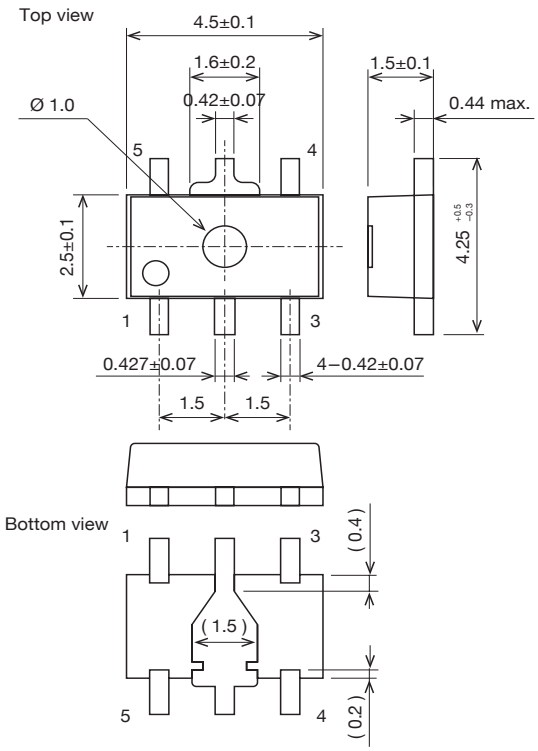	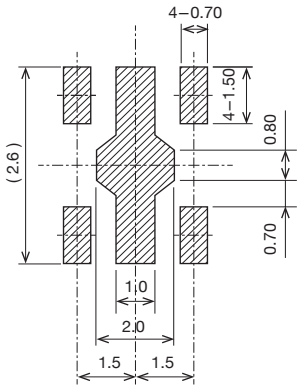

Unit: mm

Package Name	Dimentional Drawing	Recommended Land Pattern
SQFN-16A	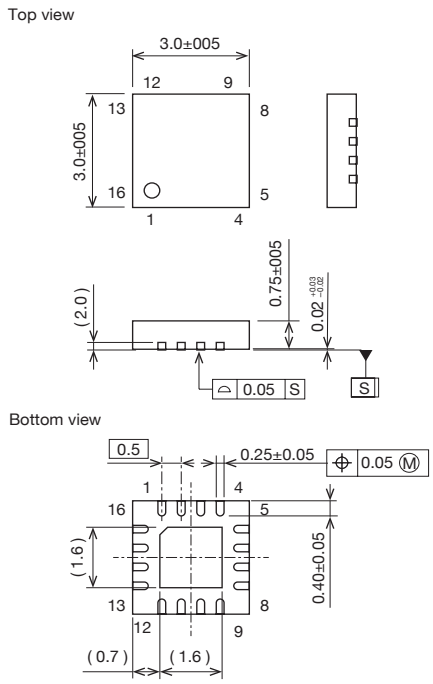	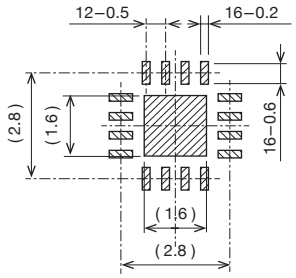
SQFN-16B	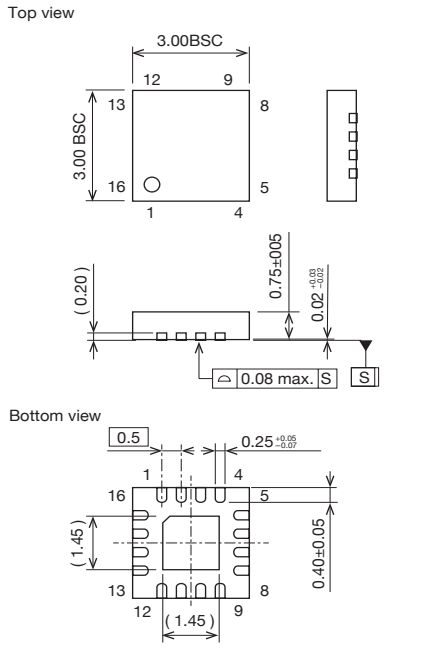	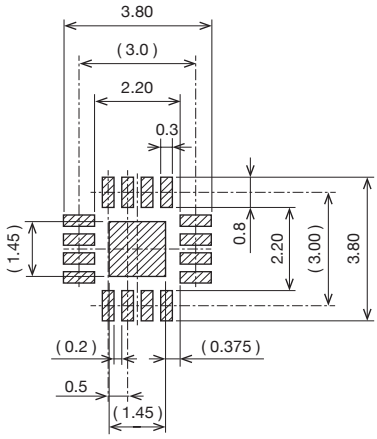

Unit: mm

Package Name	Dimentional Drawing	Recommended Land Pattern
SQFN-24A	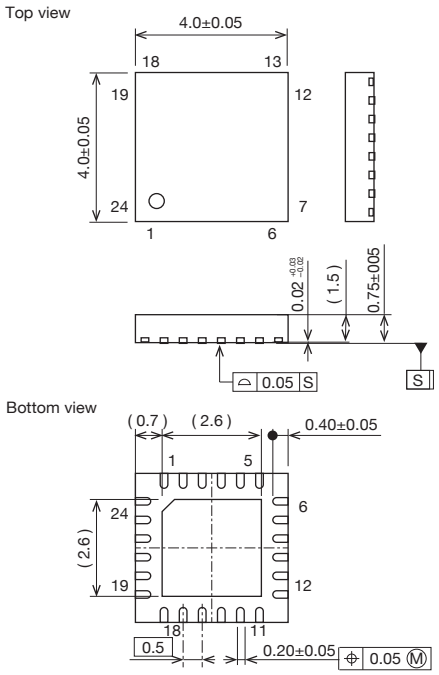	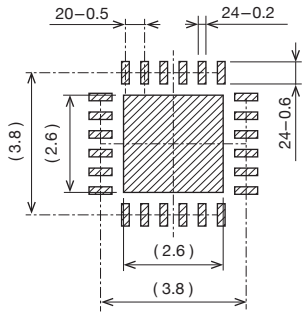
SQFN-32A	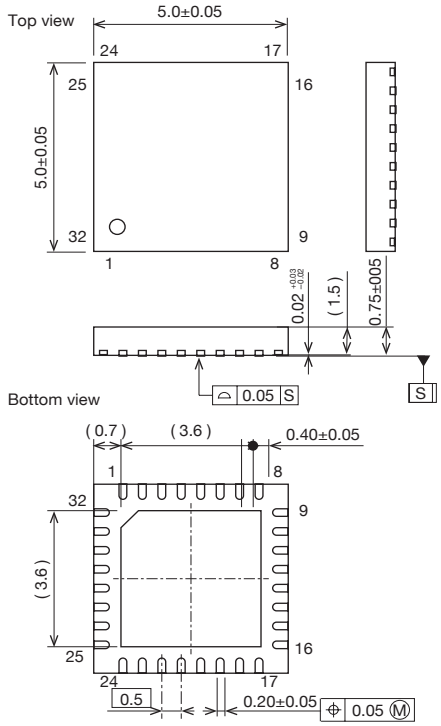	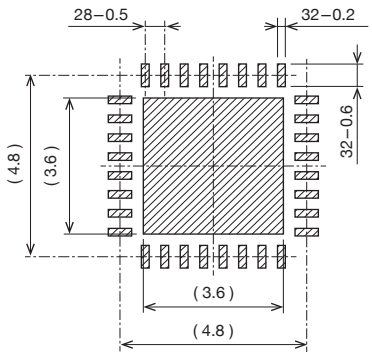

Unit: mm

Package Name	Dimentional Drawing	Recommended Land Pattern
SSON-4B	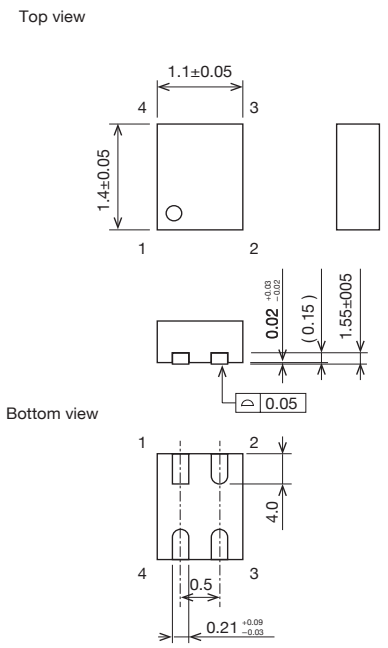	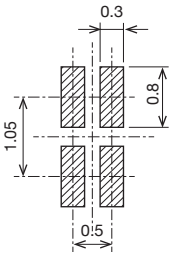
SSON-6A	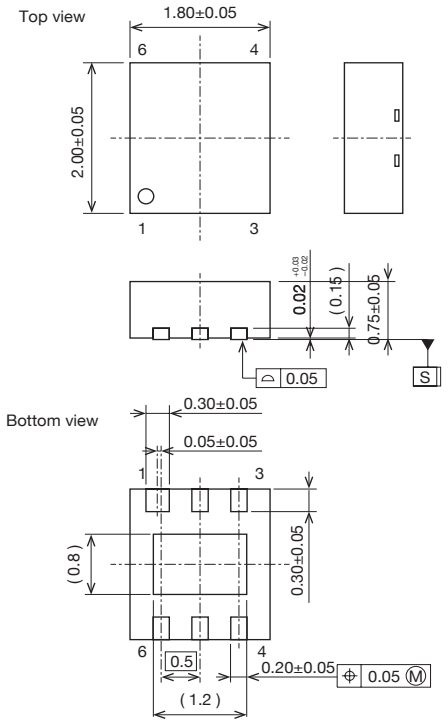	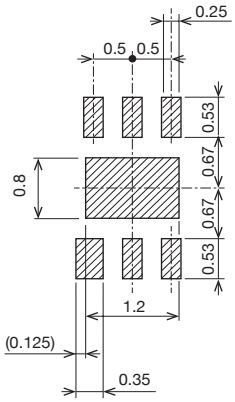

Unit: mm

Package Name	Dimentional Drawing	Recommended Land Pattern
SSON-6E	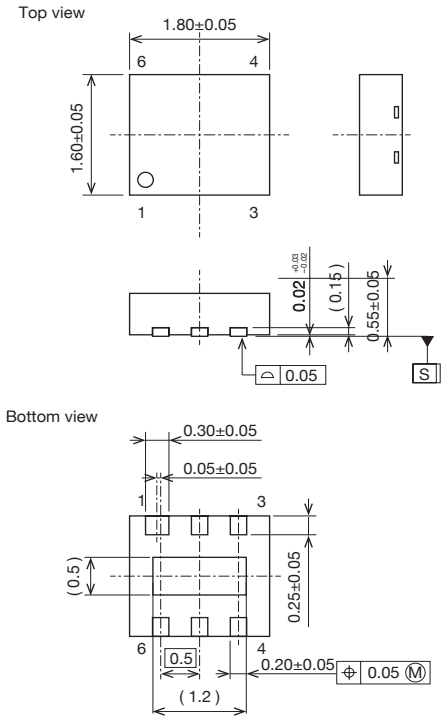	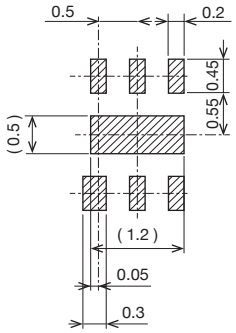
SSON-6J	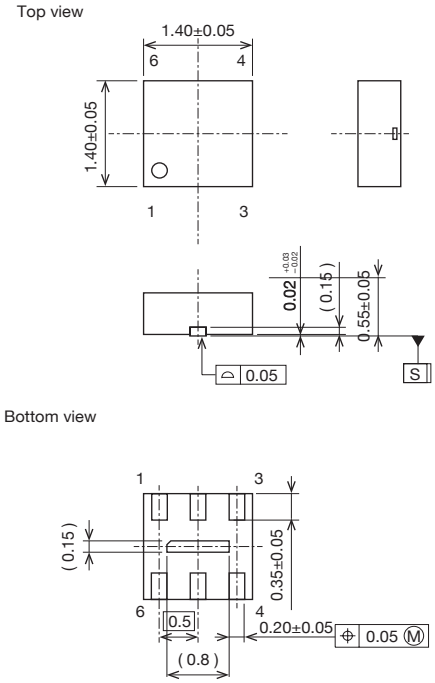	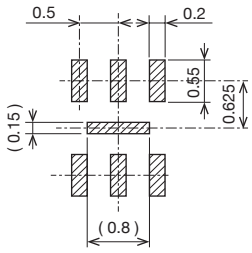

Unit: mm

Package Name	Dimentional Drawing	Recommended Land Pattern
SSON-6L	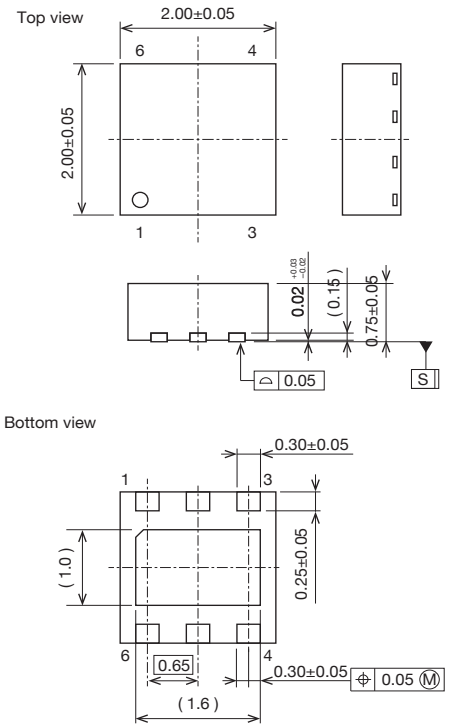	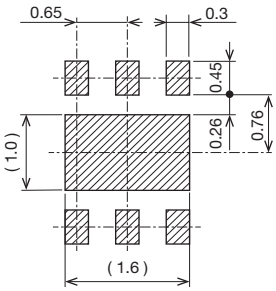
SSON-6M	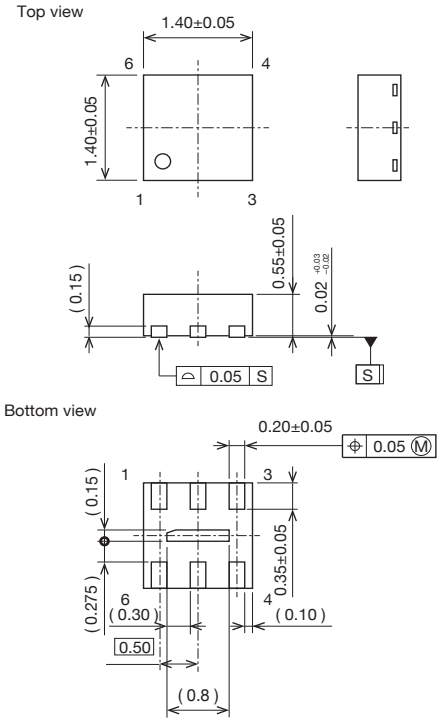	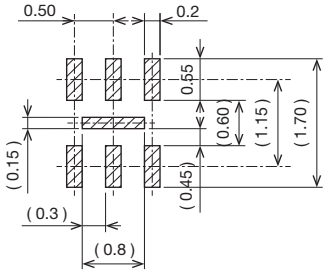

Unit: mm

Package Name	Dimentional Drawing	Recommended Land Pattern
SSON-6N	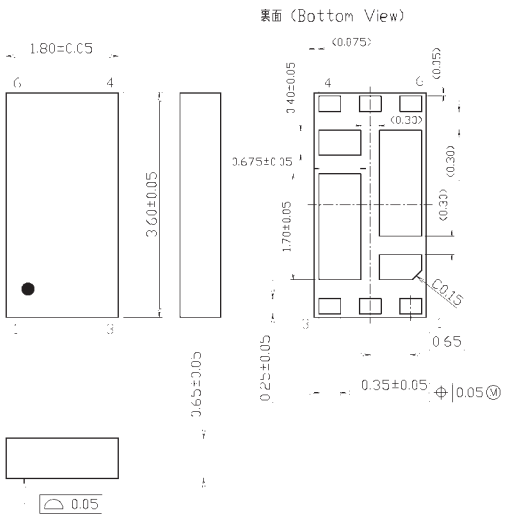	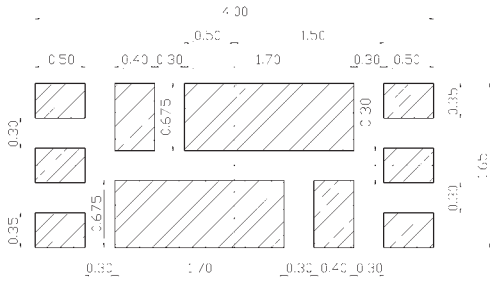
SSON-8B	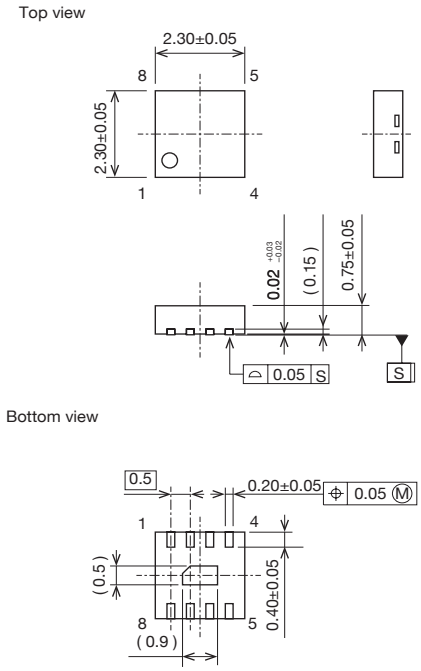	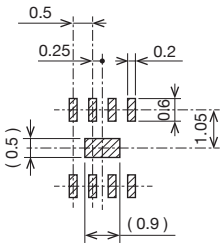

Unit: mm

Package Name	Dimentional Drawing	Recommended Land Pattern
SSON-8C	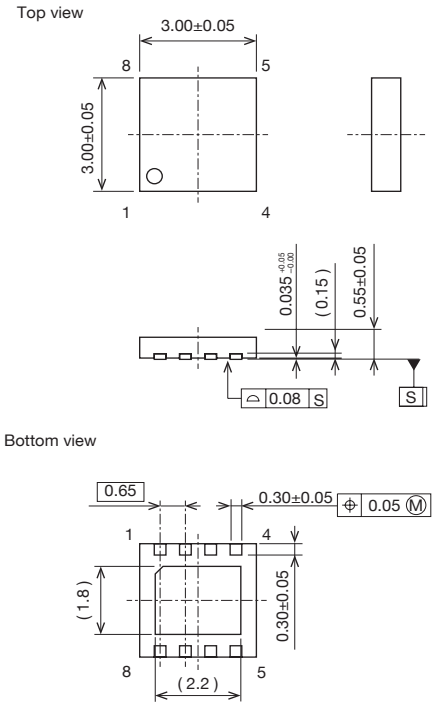	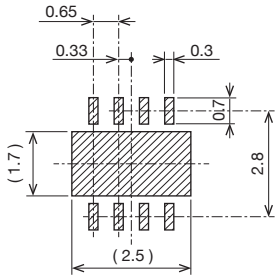
SSON-8E	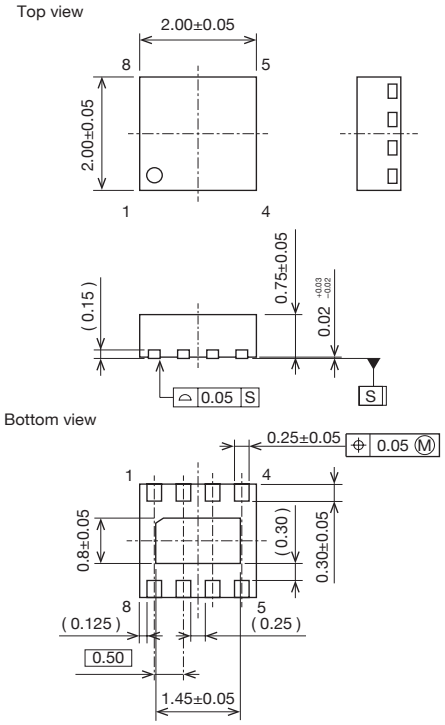	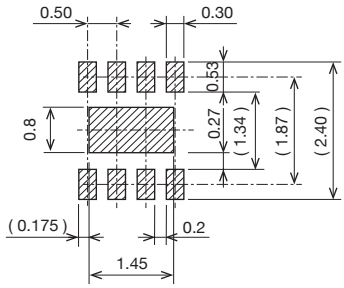

Unit: mm

Package Name	Dimentional Drawing	Recommended Land Pattern
SSON-8G	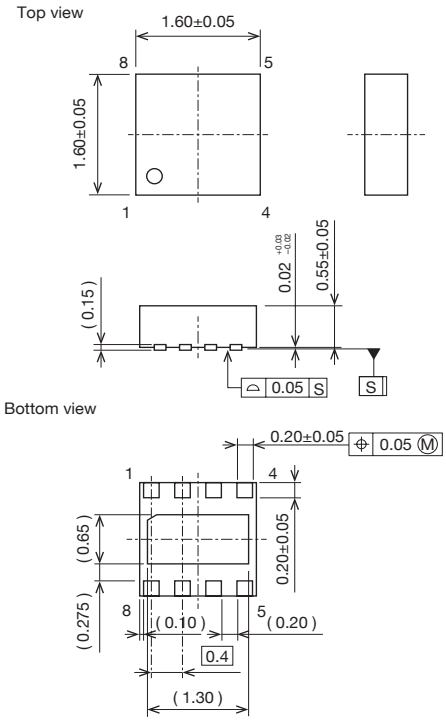	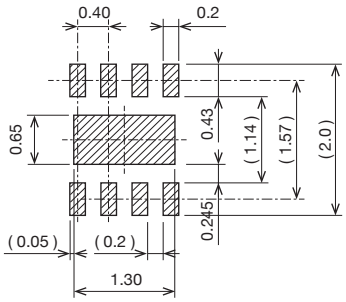
SSON-10A	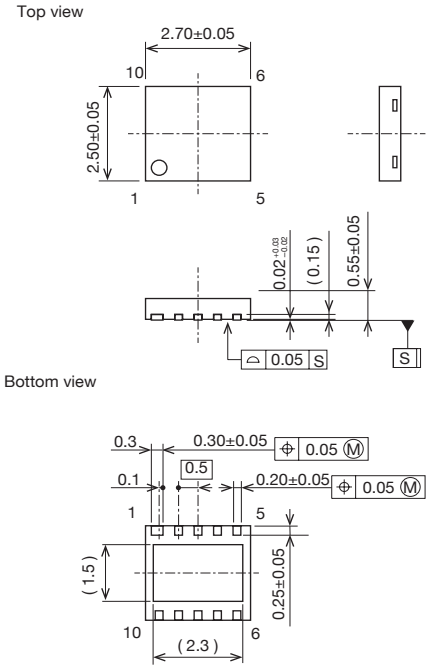	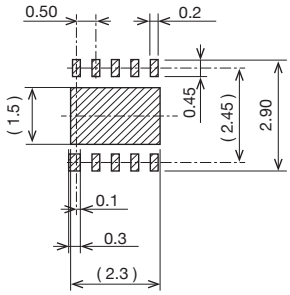

Unit: mm

Package Name	Dimentional Drawing	Recommended Land Pattern
TO-92A	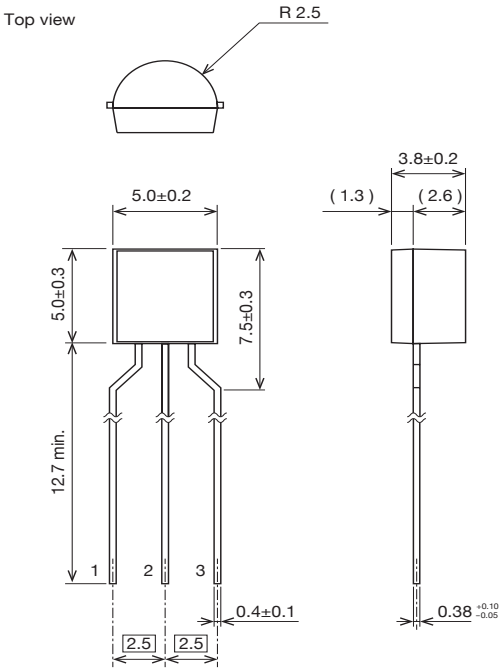	
TO-252C	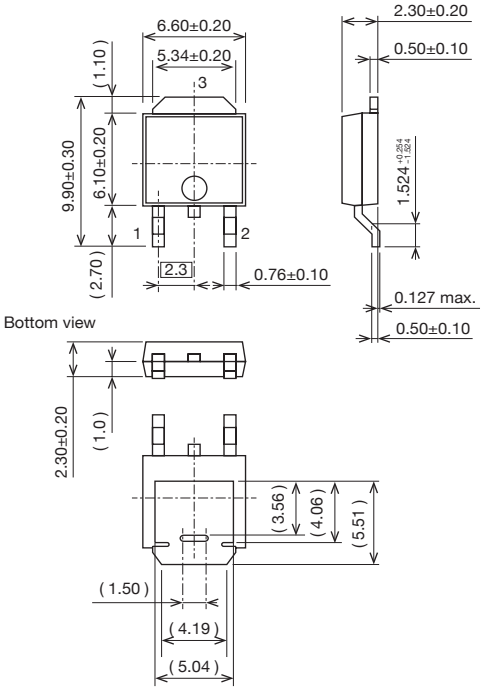	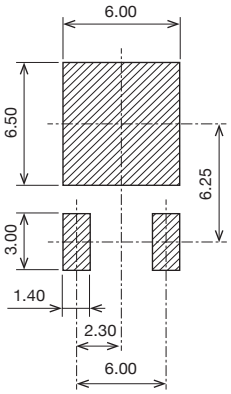

Unit: mm

Package Name	Dimentional Drawing	Recommended Land Pattern
TO-252-5A	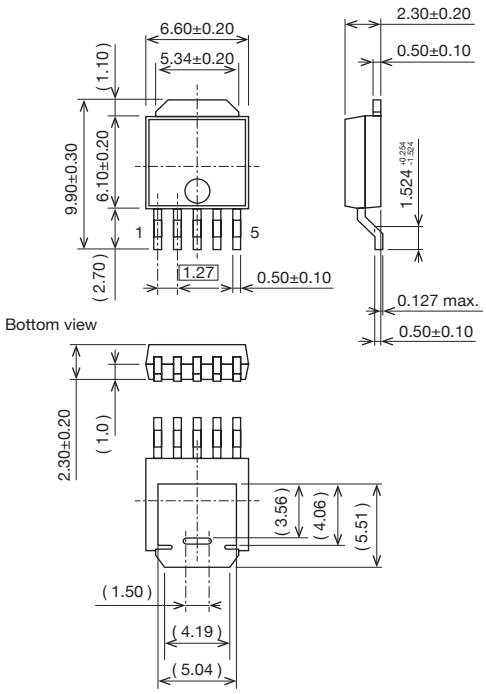	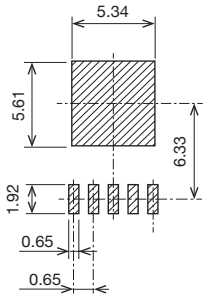
TSOP-8A	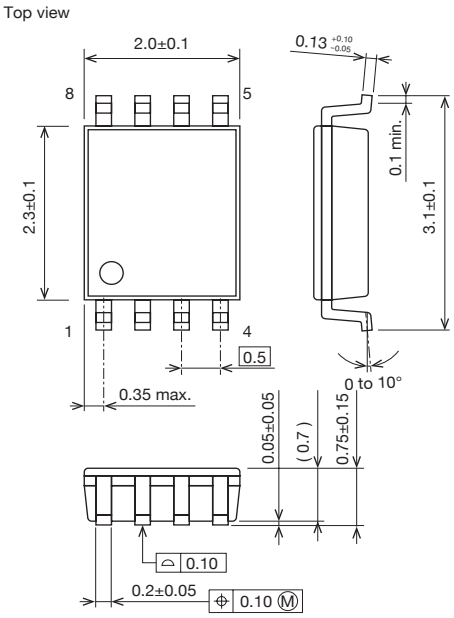	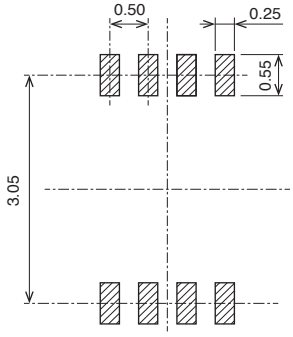

Unit: mm

Package Name	Dimentional Drawing	Recommended Land Pattern
TSOP-16B	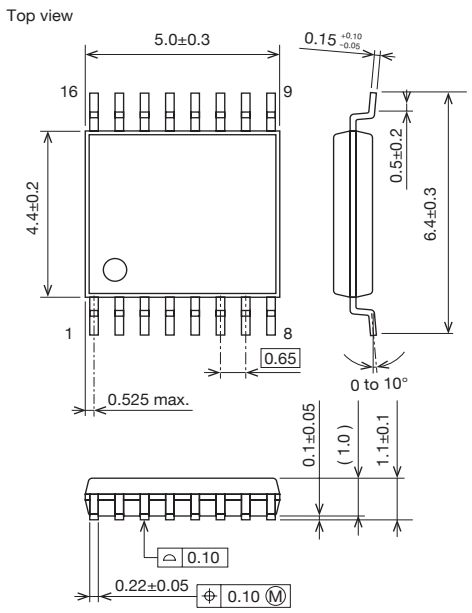	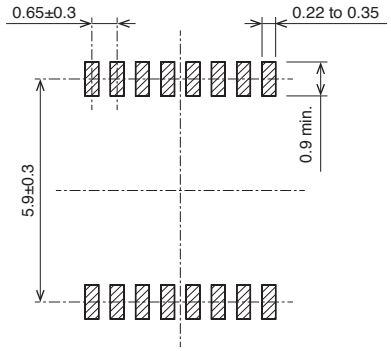
TSOP-16D	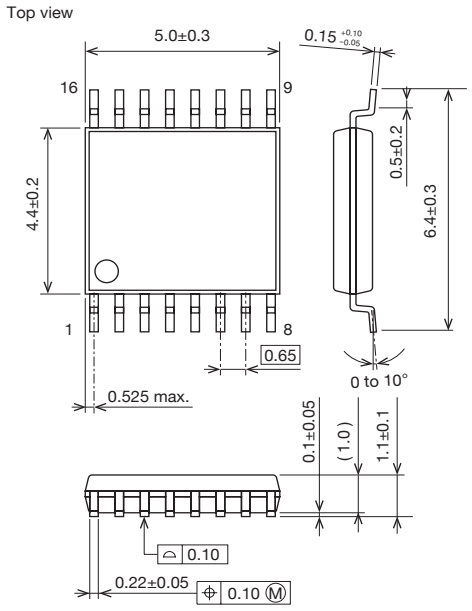	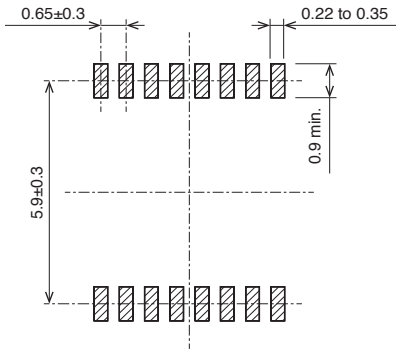

Unit: mm

Package Name	Dimentional Drawing	Recommended Land Pattern
TSOP-20A	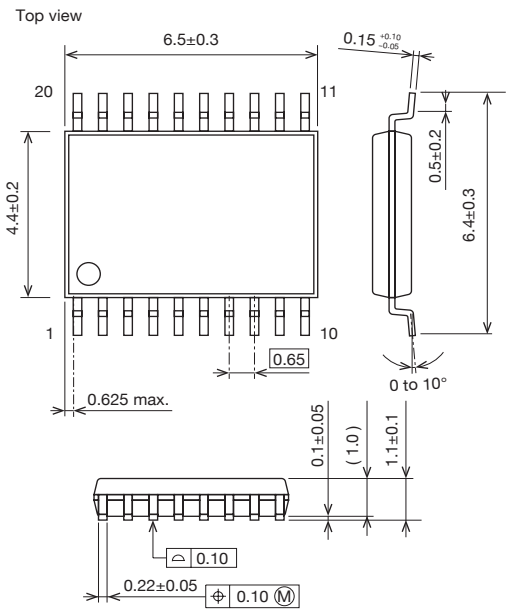	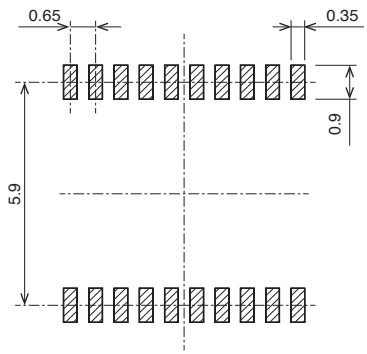
TSOP-20D	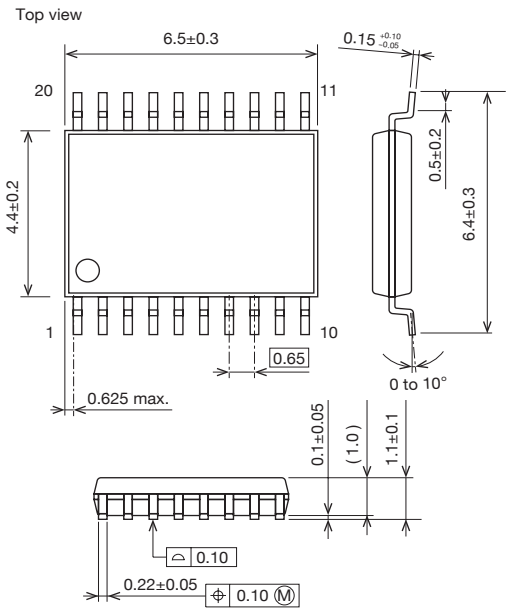	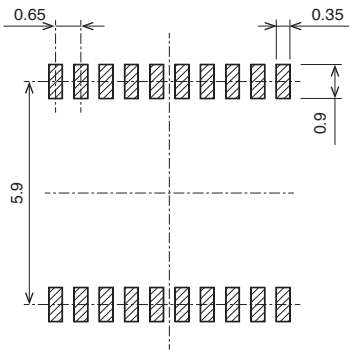

Unit: mm

Package Name	Dimentional Drawing	Recommended Land Pattern
TSOP-20E	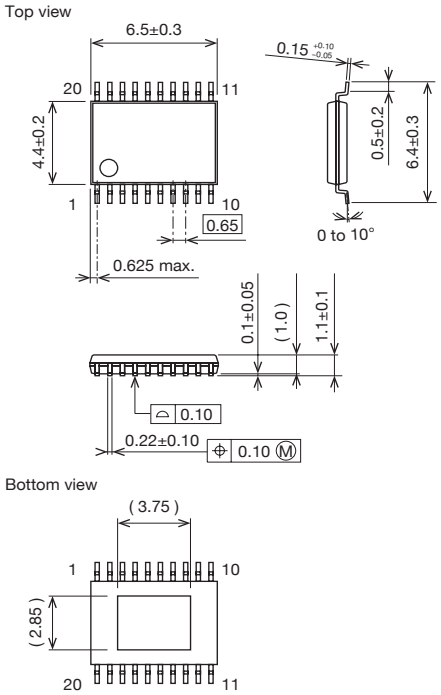	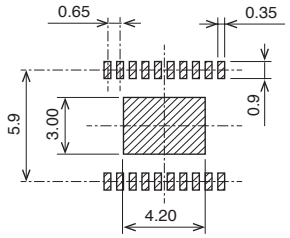
TSOP-20F	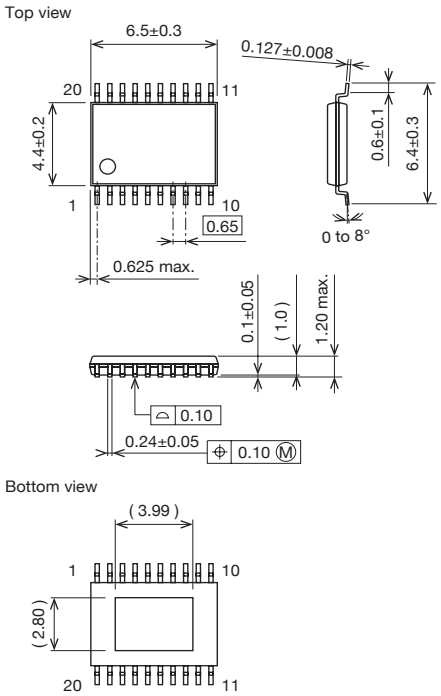	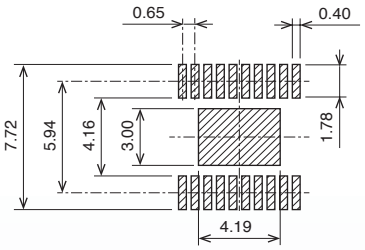

Unit: mm

Package Name	Dimentional Drawing	Recommended Land Pattern
VSOP-8B	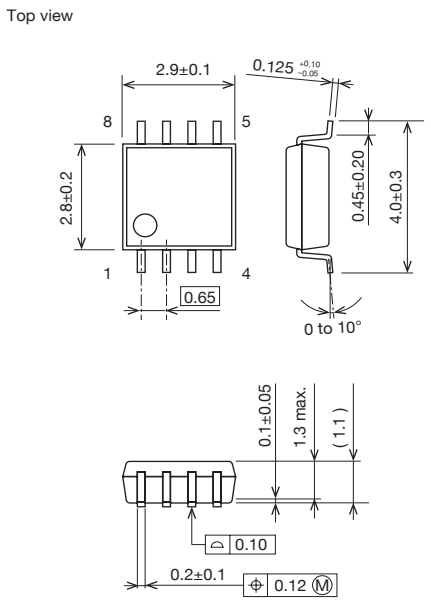	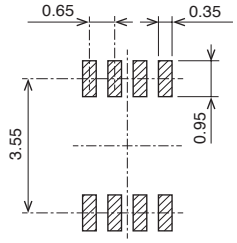
VSOP-8C	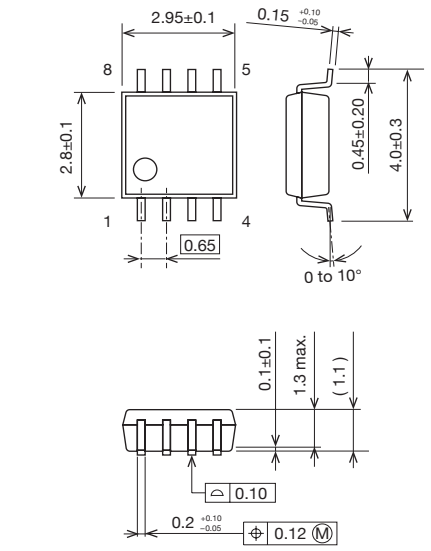	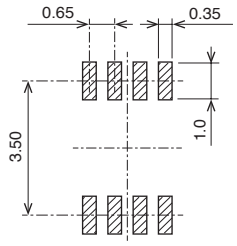

Unit: mm

Package Name	Dimentional Drawing	Recommended Land Pattern
VSOP-8D	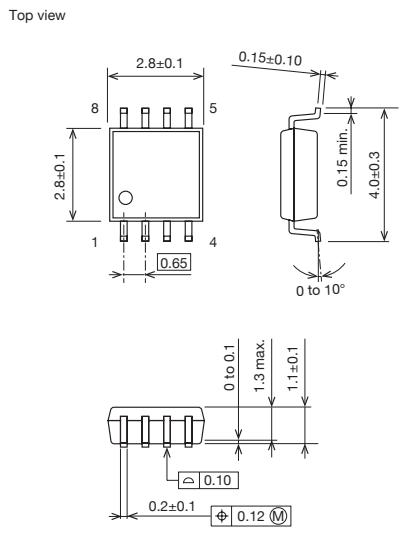	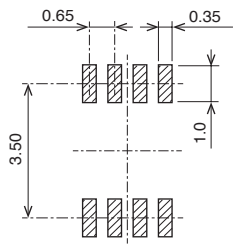
VSOP-20A	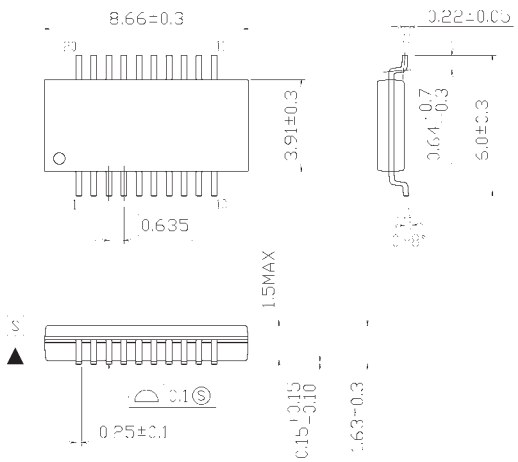	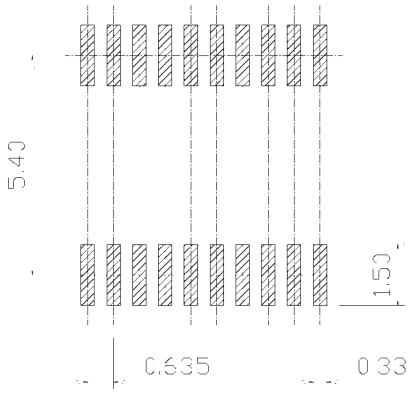

Unit: mm

Package Name	Dimentional Drawing	Recommended Land Pattern
VSOP-24A	Top view 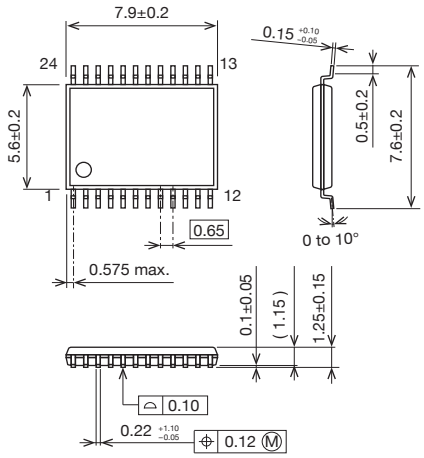	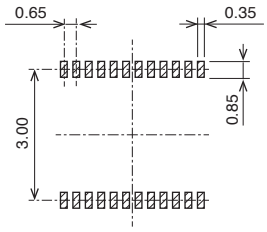
WLCSP-6B	Top view 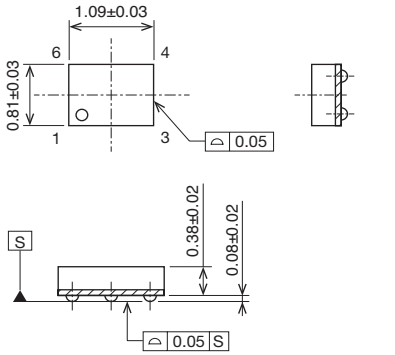 Bottom view 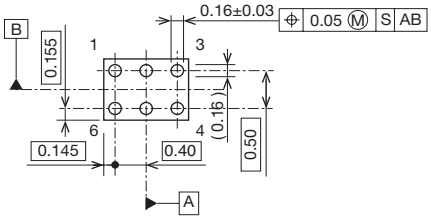	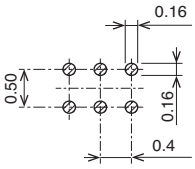

Unit: mm

Package Name	Dimentional Drawing	Recommended Land Pattern
WLCSP-6C	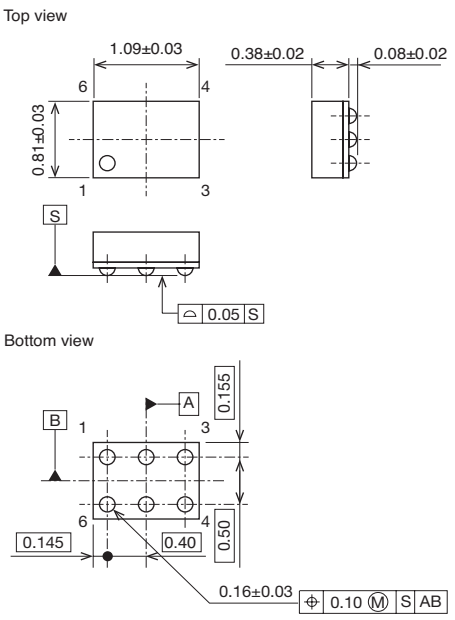	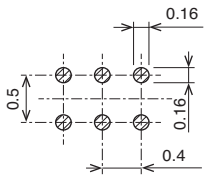
WLCSP-10A	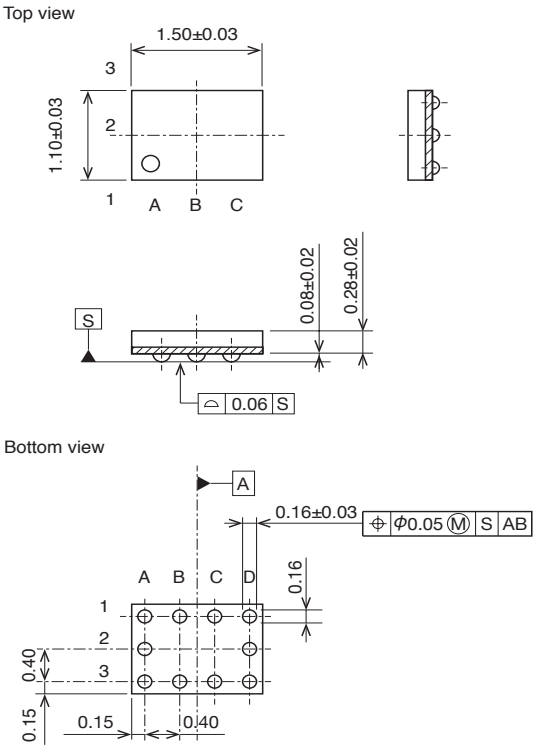	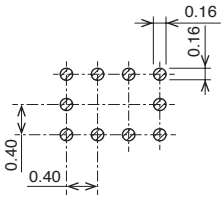

Unit: mm

Package Name	Dimentional Drawing	Recommended Land Pattern
WLCSP-25A	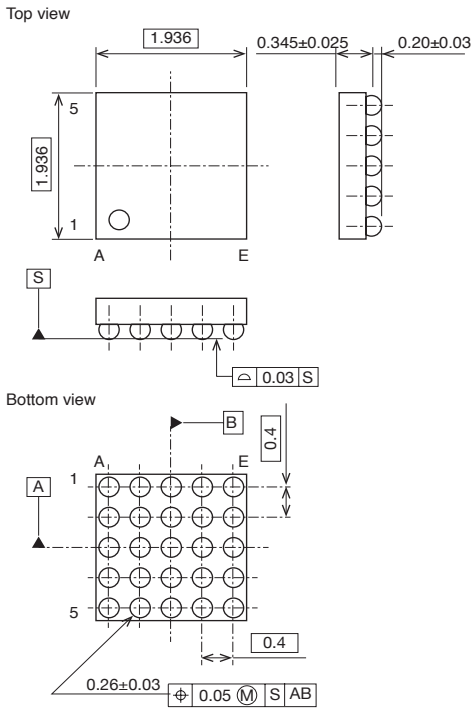	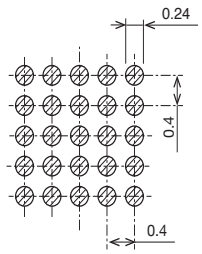
WLCSP-48B	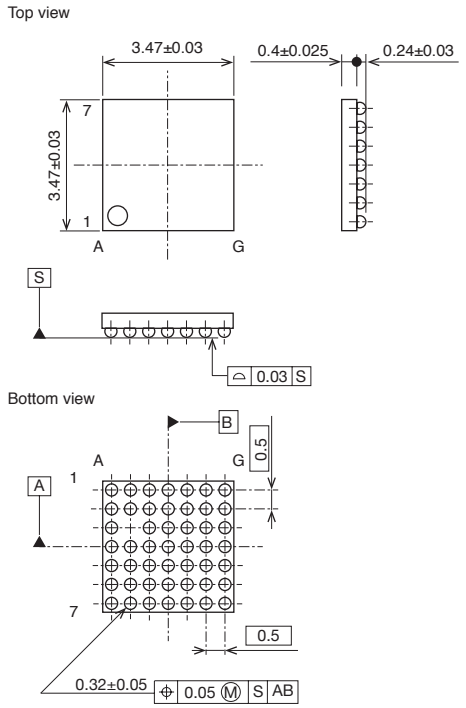	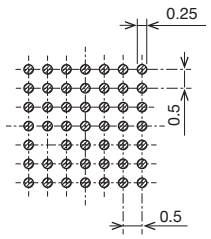

5 Pb–Free Recommended Profile

Reflow Soldering (max 2 times)

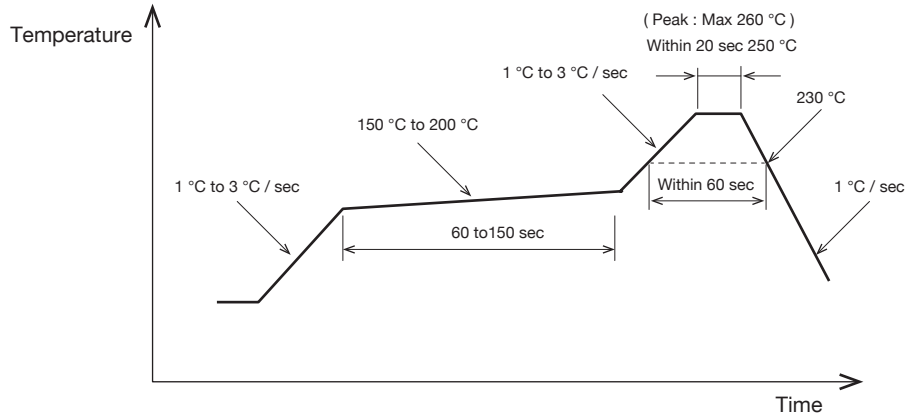

Flow Soldering (max 1 times)

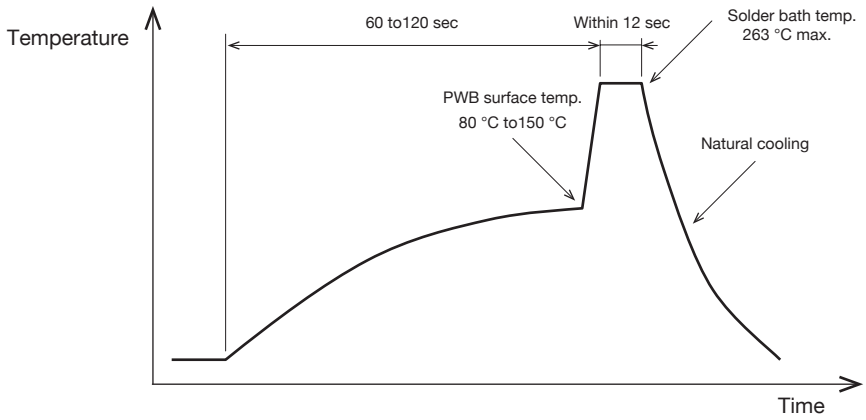

Note : In case of double–wave soldering, the temp. is at its peak during the total time of 2max. temp.

Manual Soldering

Iron tip temp./time	times
400 °C max. / 3 sec	2 max.

Pre Treatment Moisture Soaking Condition of Reliability Test

85 °C 65 %RH 168h (1st), 85 °C 65 %RH 168h (2nd)

note : Please contact us for the CSP package separately.

5 permissible counts of solder methods for each packages

Package type	Package	Reflow soldering	Flow soldering	Manual soldering
Lead type	TO-92A		1	2
Flat-lead type	SON-6A	2		2
	SON-6C	2		2
	SON-6D	2		2
	SON-6F	2		2
	SOT89-5A	2		2
Gullwing type	SC-82ABA	2	1	2
	SC-82ABB	2	1	2
	SC-88A	2	1	2
	SOT-23A	2	1	2
	SOT-25A	2	1	2
	SOT-26A	2	1	2
	SOT-26B	2	1	2
	SOP-7B	2	1	2
	SOP-8C	2	1	2
	SOP-8D	2	1	2
	SOP-8G	2	1	2
	SOP-8J	2	1	2
	SOP-10A	2	1	2
	SOP-16B	2	1	2
	SOP-28B	2	1	2
	TSOP-8A	2		2
	TSOP-16B	2		2
	TSOP-16D	2		2
	TSOP-20A	2		2
	TSOP-20D	2		2
	TSOP-20E	2		2
	TSOP-20F	2		2
	VSOP-8B	2		2
	VSOP-8C	2		2
	VSOP-8D	2		2
	VSOP-20A	2		2
	VSOP-24A	2		2
	HSOP-8A	2		2
	HSOP-8C	2		2
	HSOP-8E	2		2
	HSOP-28A	2	1	2
	HSOP-28C	2	1	2
	TO-252C	2		2
	TO-252-5A	2		2

Package type	Package	Reflow soldering	Flow soldering	Manual soldering
Non-lead type	PLP-4A	2		
	PLP-4B	2		
	PLP-4C	2		
	PLP-4D	2		
	PLP-4E	2		
	PLP-4-1228	2		
	PLP-4-2140	2		
	PLP-6A	2		
	PLP-6C	2		
	PLP-6F	2		
	PLP-6G	2		
	PLP-6H	2		
	PLP-6J	2		
	PLP-6-2130	2		
	PLP-8E	2		
	PLP-8F	2		
	PLP-8G	2		
	PLP-8H	2		
	PLP-10A	2		
	PLP-10D	2		
	PLP-12A	2		
	PLP-12B	2		
	PLP-24A	2		
	SQFN-16A	2		
	SQFN-16B	2		
	SQFN-24A	2		
	SQFN-32A	2		
	SSON-4B	2		
	SSON-6A	2		
	SSON-6E	2		
	SSON-6J	2		
	SSON-6L	2		
	SSON-6M	2		
	SSON-6N	2		
	SSON-8B	2		
	SSON-8C	2		
	SSON-8E	2		
	SSON-8G	2		
	SSON-10A	2		
	WLCSP-6B	2		
	WLCSP-6C	2		
	WLCSP-10A	2		
	WLCSP-25A	2		
	WLCSP-48B	2		

*1 Ask us the temperature.
*2 This packages should be soldered within 168 hours after unpacking because they are moisture–proof packing products.
They should be also soldered within 168 hours in the second or following solder.

MinebeaMitsumi combines Minebea's ultra precision machining technology with MITSUMI ELECTRIC(MITSUMI)'s electronics technology as an "Electro Mechanics Solutions™" provider that contributes to the age of IoT, supporting manufacturing around the world.

* "Electro Mechanics Solutions" is a registered trademark in Japan of MinebeaMitsumi Inc. Its registration No. is 5322479.

ICs

- Power Supply IC
- Li-ion / Li-poly Battery IC
- Reset IC
- Sensor IC

Component Devices

- Power Inductor / Transformer / Coil
- Connector
- Switch
- DC Mini-Motor
- Stepping Motor

Power Supply

- AC Adaptor
- Charger
- DC Adaptor
- Internal Power Supply
- Power Supply for LED Light

High-frequency Products

- Wireless LAN Module
- Bluetooth® Module
- GPS Antenna
- Terrestrial Digital Broadcasting Antenna
- Keyless Module

CATV / IP

- Set-top Box

Our lead-free products meet the requirements of the RoHS directive.

JET REGISTERED FIRM
ISO14001
E97-024

●Note: The contents described in this catalog are subject to change without prior notice due to products improvements or termination of production.

Please refer to MITSUMI's home page for the most recent product data.

English

http://www.mitsumi.co.jp/products/eng/

- The product information on the home page is the same as that in the catalog.
- The data are updated continuously, so the home page always shows the newest product information.
- A search function is provided to help you quickly find the product you are looking for or related products. Please make full use of it.
- Product data is recorded in Adobe's Acrobat PDF file format.

Please address inquiry to :

◯Sales Headquarters

Semiconductor & Battery Sales Management Sumitomo Fudosan Mita Twin Bldg. 3-5-27, Mita, Minato-ku, Tokyo 108-6319, JAPAN Phone : +81-(0)3-6370-3686

◯MITSUMI ELECTRIC CO.,LTD. Semiconductor Business Division

Strategy Engineering Dept. 1601, Sakai, Atsugi-shi, Kanagawa-ken, 243-8533 JAPAN Atsugi Operation Base Phone : +81-(0)46-230-3470

MinebeaMitsumi

Passion to Create Value through Difference

MinebeaMitsumi Inc. Sumitomo Fudosan Mita Twin Bldg. 3-5-27, Mita, Minato-ku, Tokyo 108-6319, JAPAN Phone : +81-(0)3-6758-6740 / Fax : +81-(0)3-6758-6741

Printed in Japan 1912A02①