ON Semiconductor

Is Now

To learn more about onsemi™, please visit our website at
www.onsemi.com

onsemi and onsemi and other names, marks, and brands are registered and/or common law trademarks of Semiconductor Components Industries, LLC dba "**onsemi**" or its affiliates and/or subsidiaries in the United States and/or other countries. **onsemi** owns the rights to a number of patents, trademarks, copyrights, trade secrets, and other intellectual property. A listing of **onsemi** product/patent coverage may be accessed at www.onsemi.com/site/pdf/Patent-Marking.pdf. **onsemi** reserves the right to make changes at any time to any products or information herein, without notice. The information herein is provided "as-is" and **onsemi** makes no warranty, representation or guarantee regarding the accuracy of the information, product features, availability, functionality, or suitability of its products for any particular purpose, nor does **onsemi** assume any liability arising out of the application or use of any product or circuit, and specifically disclaims any and all liability, including without limitation special, consequential or incidental damages. Buyer is responsible for its products and applications using **onsemi** products, including compliance with all laws, regulations and safety requirements or standards, regardless of any support or applications information provided by **onsemi**. "Typical" parameters which may be provided in **onsemi** data sheets and/or specifications can and do vary in different applications and actual performance may vary over time. All operating parameters, including "Typicals" must be validated for each customer application by customer's technical experts. **onsemi** does not convey any license under any of its intellectual property rights nor the rights of others. **onsemi** products are not designed, intended, or authorized for use as a critical component in life support systems or any FDA Class 3 medical devices or medical devices with a same or similar classification in a foreign jurisdiction or any devices intended for implantation in the human body. Should Buyer purchase or use **onsemi** products for any such unintended or unauthorized application, Buyer shall indemnify and hold **onsemi** and its officers, employees, subsidiaries, affiliates, and distributors harmless against all claims, costs, damages, and expenses, and reasonable attorney fees arising out of, directly or indirectly, any claim of personal injury or death associated with such unintended or unauthorized use, even if such claim alleges that **onsemi** was negligent regarding the design or manufacture of the part. **onsemi** is an Equal Opportunity/Affirmative Action Employer. This literature is subject to all applicable copyright laws and is not for resale in any manner. Other names and brands may be claimed as the property of others.

Downloaded from Arrow.com.

KAI-01150

1280 (H) x 720 (V) Interline CCD Image Sensor

ON Semiconductor®

www.onsemi.com

Description

The ON Semiconductor KAI−01150 Image Sensor is a 720p format (1280 x 720 pixel) CCD in a 1/2” optical format. Based on the TRUESENSE 5.5 micron Interline Transfer CCD Platform, the sensor features broad dynamic range, excellent imaging performance, and a flexible readout architecture that enables use of 1, 2, or 4 outputs for full resolution readout of 138 frames per second. A vertical overflow drain structure suppresses image blooming and enables electronic shuttering for precise exposure control.

Table 1. GENERAL SPECIFICATIONS

Parameter	Typical Value
Architecture	Interline CCD, Progressive Scan
Total Number of Pixels	1364 (H) × 760 (V)
Number of Effective Pixels	1320 (H) × 736 (V)
Number of Active Pixels	1280 (H) × 720 (V)
Pixel Size	5.5 μm (H) × 5.5 μm (V)
Active Image Size	7.04 mm (H) × 3.96 mm (V) 8.08 mm (diag.), 1/2″ Optical Format
Aspect Ratio	16:9
Number of Outputs	1, 2, or 4
Charge Capacity	20,000 electrons
Output Sensitivity	34 μV/e⁻
Quantum Efficiency Pan (−ABA, −QBA, −PBA) R, G, B (−FBA, −QBA) R, G, B (−CBA, −PBA)	 44% 31%, 37%, 38% 29%, 37%, 39%
Base ISO KAI−01150−ABA KAI−01150−FBA KAI−01150−CBA KAI−01150−PBA	 330 170 150 330
Read Noise (f = 40 MHz)	12 e⁻ rms
Dark Current Photodiode / VCCD	 7 / 140 e⁻/s
Dark Current Doubling Temp Photodiode / VCCD	 7°C / 9°C
Dynamic Range	64 dB
Charge Transfer Efficiency	0.999999
Blooming Suppression	> 300 X
Smear	−100 dB
Image Lag	< 10 electrons
Maximum Pixel Clock Speed	40 MHz
Maximum Frame Rate Quad / Dual / Single Output	 138 / 69 / 36 fps
Package Options	68 Pin PGA 64 Pin CLCC
Cover Glass	AR Coated, 2-Sides or Clear Glass

NOTE: All Parameters are specified at T = 40°C unless otherwise noted.

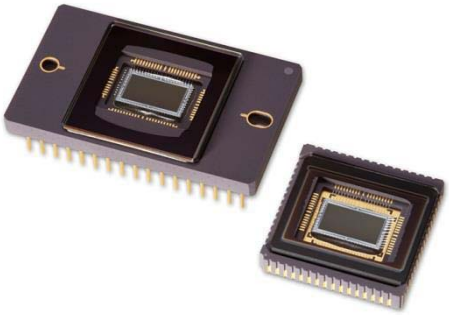

Figure 1. KAI−01150 Interline CCD Image Sensor

Features

- Bayer Color Pattern, TRUESENSE Sparse Color Filter Pattern, and Monochrome Configurations
- Progressive Scan Readout
- Flexible Readout Architecture
- High Frame Rate
- High Sensitivity
- Low Noise Architecture
- Excellent Smear Performance
- Package Pin Reserved for Device Identification

Applications

- Intelligent Traffic Systems
- Security / Surveillance
- Industrial Imaging

ORDERING INFORMATION

See detailed ordering and shipping information on page 2 of this data sheet.

© Semiconductor Components Industries, LLC, 2015

August, 2015 − Rev. 5

Publication Order Number:
KAI−01150/D

Downloaded from Arrow.com.

The sensor is available with the TRUESENSE Sparse Color Filter Pattern, a technology which provides a 2x improvement in light sensitivity compared to a standard color Bayer part.

The sensor shares common PGA pin−out and electrical configurations with other devices based on the TRUESENSE 5.5 micron Interline Transfer CCD Platform, allowing a single camera design to support multiple members of this sensor family.

ORDERING INFORMATION

Standard Devices

See full datasheet for ordering information associated with devices no longer recommended for new designs.

Table 2. ORDERING INFORMATION − STANDARD DEVICES

Part Number	Description	Marking Code
KAI−01150−ABA−JD−BA	Monochrome, Telecentric Microlens, PGA Package, Sealed Clear Cover Glass with AR Coating (Both Sides), Standard Grade	KAI−01150−ABA Serial Number
KAI−01150−ABA−JD−AE	Monochrome, Telecentric Microlens, PGA Package, Sealed Clear Cover Glass with AR Coating (Both Sides), Engineering Grade	
KAI−01150−ABA−FD−BA	Monochrome, Telecentric Microlens, CLCC Package, Sealed Clear Cover Glass with AR Coating (Both Sides), Standard Grade	
KAI−01150−ABA−FD−AE	Monochrome, Telecentric Microlens, CLCC Package, Sealed Clear Cover Glass with AR Coating (Both Sides), Engineering Grade	
KAI−01150−FBA−JD−BA	Gen2 Color (Bayer RGB), Telecentric Microlens, PGA Package, Sealed Clear Cover Glass with AR Coating (Both Sides), Standard Grade	KAI−01150−FBA Serial Number
KAI−01150−FBA−JD−AE	Gen2 Color (Bayer RGB), Telecentric Microlens, PGA Package, Sealed Clear Cover Glass with AR Coating (Both Sides), Engineering Grade	
KAI−01150−FBA−FD−BA	Gen2 Color (Bayer RGB), Telecentric Microlens, CLCC Package, Sealed Clear Cover Glass with AR Coating (Both Sides), Standard Grade	
KAI−01150−FBA−FD−AE	Gen2 Color (Bayer RGB), Telecentric Microlens, CLCC Package, Sealed Clear Cover Glass with AR Coating (Both Sides), Engineering Grade	
KAI−01150−FBA−JB−B2	Gen2 Color (Bayer RGB), Telecentric Microlens, PGA Package, Sealed Clear Cover Glass (no coatings), Grade 2	
KAI−01150−FBA−JB−AE	Gen2 Color (Bayer RGB), Telecentric Microlens, PGA Package, Sealed Clear Cover Glass (no coatings), Engineering Grade	
KAI−01150−QBA−JD−BA	Gen2 Color (TRUESENSE Sparse CFA), Telecentric Microlens, PGA Package, Sealed Clear Cover Glass with AR Coating (Both Sides), Standard Grade	KAI−01150−QBA Serial Number
KAI−01150−QBA−JD−AE	Gen2 Color (TRUESENSE Sparse CFA), Telecentric Microlens, PGA Package, Sealed Clear Cover Glass with AR Coating (Both Sides), Engineering Grade	
KAI−01150−QBA−FD−BA	Gen2 Color (TRUESENSE Sparse CFA), Telecentric Microlens, CLCC Package, Sealed Clear Cover Glass with AR Coating (Both Sides), Standard Grade	
KAI−01150−QBA−FD−AE	Gen2 Color (TRUESENSE Sparse CFA), Telecentric Microlens, CLCC Package, Sealed Clear Cover Glass with AR Coating (Both Sides), Engineering Grade	

See the ON Semiconductor *Device Nomenclature* document (TND310/D) for a full description of the naming convention used for image sensors. For reference documentation, including information on evaluation kits, please visit our web site at www.onsemi.com.

Downloaded from Arrow.com.

Not Recommended for New Designs

Table 3. ORDERING INFORMATION − NOT RECOMMENDED FOR NEW DESIGNS

Part Number	Description	Marking Code
KAI−01150−CBA−JD−BA	Gen1 Color (Bayer RGB), Telecentric Microlens, PGA Package, Sealed Clear Cover Glass with AR Coating (Both Sides), Standard Grade	KAI−01150−CBA Serial Number
KAI−01150−CBA−JD−AE	Gen1 Color (Bayer RGB), Telecentric Microlens, PGA Package, Sealed Clear Cover Glass with AR Coating (Both Sides), Engineering Grade	
KAI−01150−CBA−FD−BA	Gen1 Color (Bayer RGB), Telecentric Microlens, CLCC Package, Sealed Clear Cover Glass with AR Coating (Both Sides), Standard Grade	
KAI−01150−CBA−FD−AE	Gen1 Color (Bayer RGB), Telecentric Microlens, CLCC Package, Sealed Clear Cover Glass with AR Coating (Both Sides), Engineering Grade	
KAI−01150−CBA−JB−B2	Gen1 Color (Bayer RGB), Telecentric Microlens, PGA Package, Sealed Clear Cover Glass (no coatings), Grade 2	
KAI−01150−CBA−JB−AE	Gen1 Color (Bayer RGB), Telecentric Microlens, PGA Package, Sealed Clear Cover Glass (no coatings), Engineering Grade	
KAI−01150−PBA−JD−BA	Gen1 Color (TRUESENSE Sparse CFA), Telecentric Microlens, PGA Package, Sealed Clear Cover Glass with AR Coating (Both Sides), Standard Grade	KAI−01150−PBA Serial Number
KAI−01150−PBA−JD−AE	Gen1 Color (TRUESENSE Sparse CFA), Telecentric Microlens, PGA Package, Sealed Clear Cover Glass with AR Coating (Both Sides), Engineering Grade	
KAI−01150−PBA−FD−BA	Gen1 Color (TRUESENSE Sparse CFA), Telecentric Microlens, CLCC Package, Sealed Clear Cover Glass with AR Coating (Both Sides), Standard Grade	
KAI−01150−PBA−FD−AE	Gen1 Color (TRUESENSE Sparse CFA), Telecentric Microlens, CLCC Package, Sealed Clear Cover Glass with AR Coating (Both Sides), Engineering Grade	

Downloaded from Arrow.com.

DEVICE DESCRIPTION

Architecture

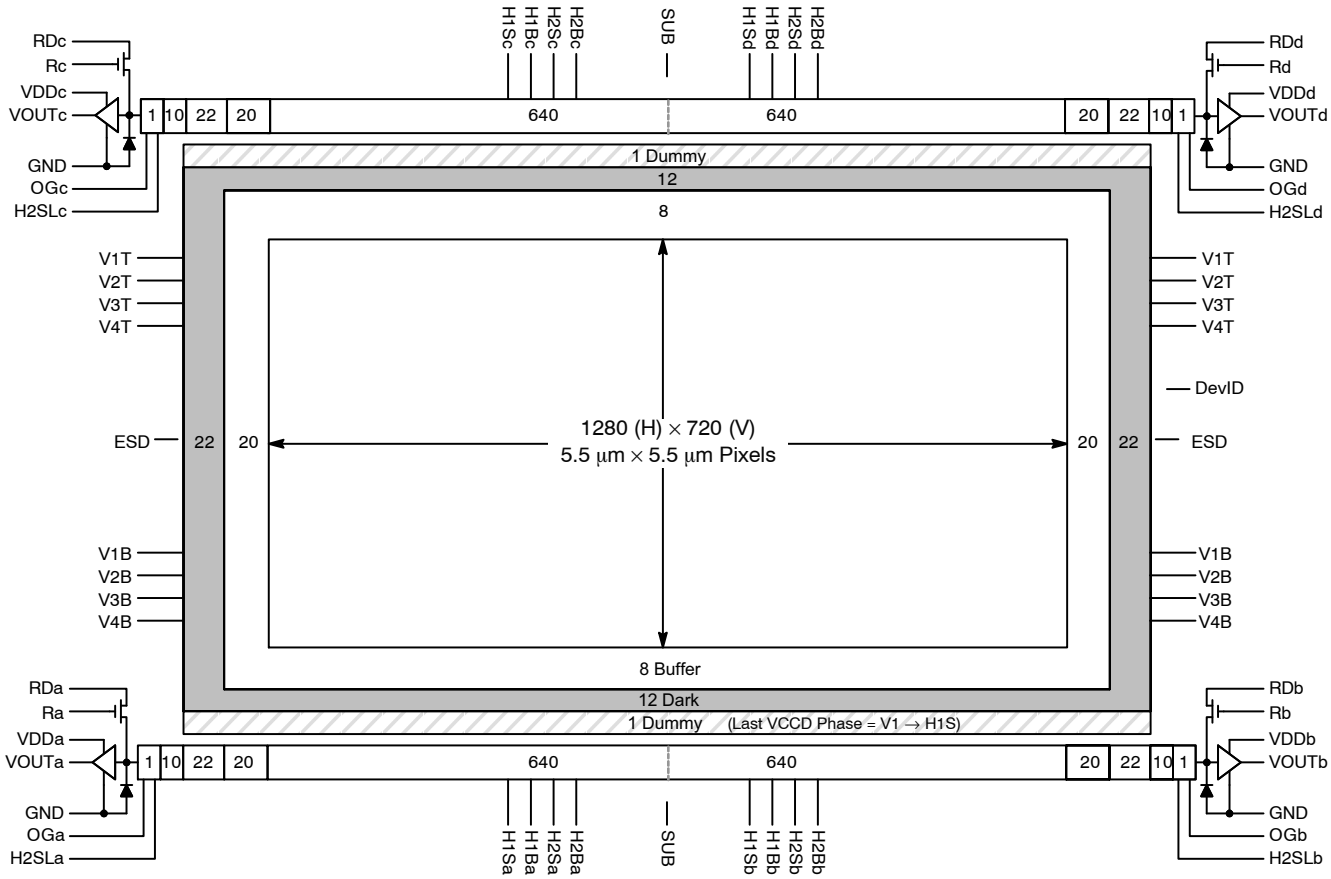

Figure 2. Block Diagram

Dark Reference Pixels

There are 12 dark reference rows at the top and 12 dark rows at the bottom of the image sensor. The dark rows are not entirely dark and so should not be used for a dark reference level. Use the 22 dark columns on the left or right side of the image sensor as a dark reference.

Under normal circumstances use only the center 20 columns of the 22 column dark reference due to potential light leakage.

Dummy Pixels

Within each horizontal shift register there are 11 leading additional shift phases. These pixels are designated as dummy pixels and should not be used to determine a dark reference level.

In addition, there is one dummy row of pixels at the top and bottom of the image.

Active Buffer Pixels

20 unshielded pixels adjacent to any leading or trailing dark reference regions are classified as active buffer pixels. These pixels are light sensitive but are not tested for defects and non-uniformities.

Image Acquisition

An electronic representation of an image is formed when incident photons falling on the sensor plane create electron-hole pairs within the individual silicon photodiodes. These photoelectrons are collected locally by the formation of potential wells at each photosite. Below photodiode saturation, the number of photoelectrons collected at each pixel is linearly dependent upon light level and exposure time and non-linearly dependent on wavelength. When the photodiodes charge capacity is reached, excess electrons are discharged into the substrate to prevent blooming.

ESD Protection

Adherence to the power-up and power-down sequence is critical. Failure to follow the proper power-up and power-down sequences may cause damage to the sensor. See Power-Up and Power-Down Sequence section.

Downloaded from Arrow.com.

Bayer Color Filter Pattern

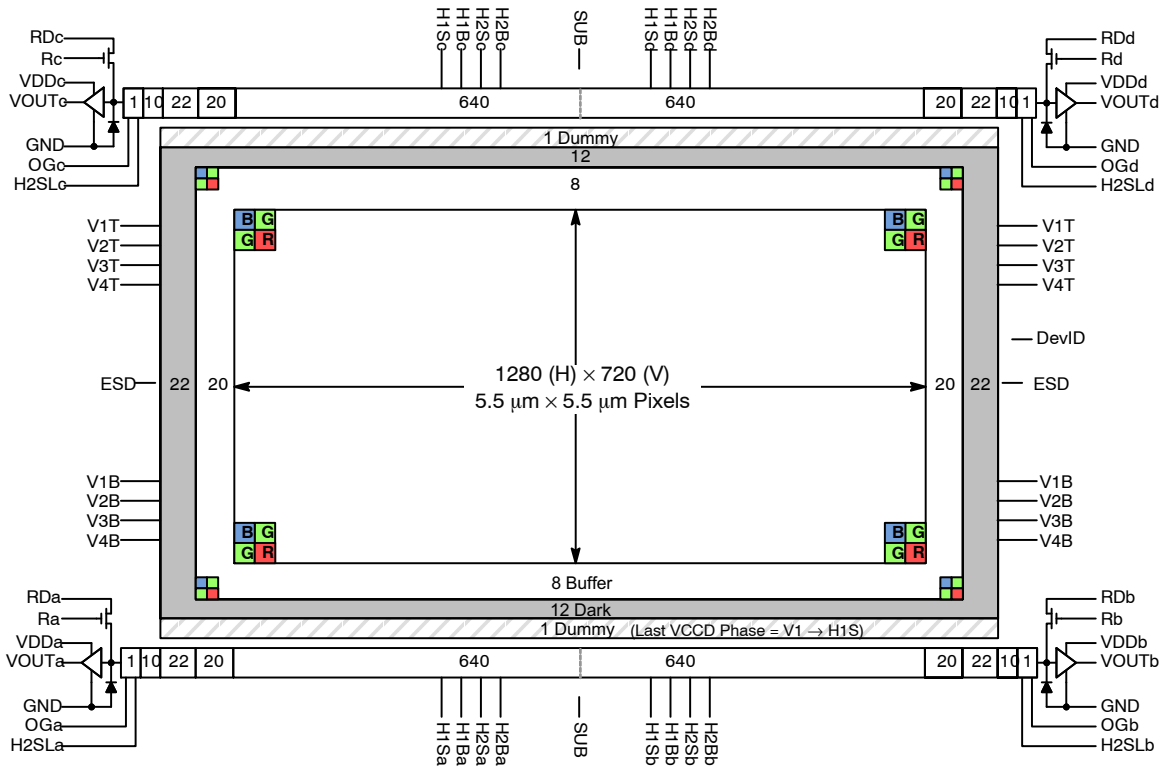

Figure 3. Bayer Color Filter Pattern

TRUESENSE Sparse Color Filter Pattern

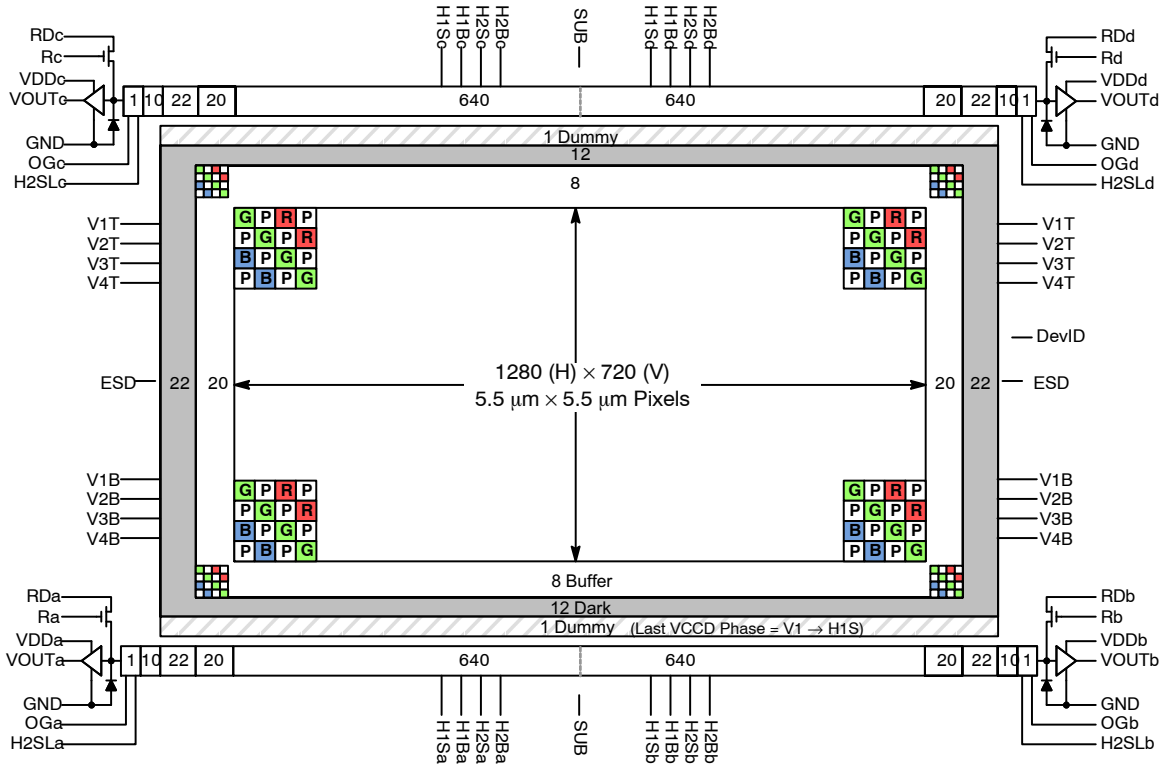

Figure 4. TRUESENSE Sparse Color Filter Pattern

Downloaded from Arrow.com.

Physical Description

PGA Pin Description and Device Orientation

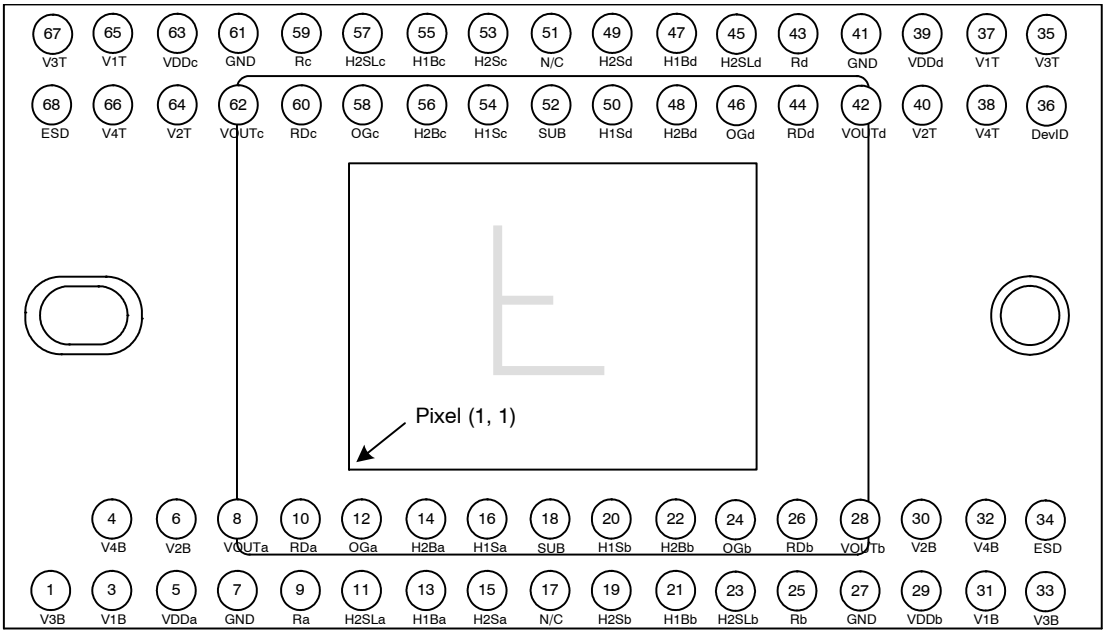

Figure 5. PGA Package Pin Designations − Top View

Table 4. PGA PACKAGE PIN DESCRIPTION

Pin	Name	Description
1	V3B	Vertical CCD Clock, Phase 3, Bottom
3	V1B	Vertical CCD Clock, Phase 1, Bottom
4	V4B	Vertical CCD Clock, Phase 4, Bottom
5	VDDa	Output Amplifier Supply, Quadrant a
6	V2B	Vertical CCD Clock, Phase 2, Bottom
7	GND	Ground
8	VOUTa	Video Output, Quadrant a
9	Ra	Reset Gate, Quadrant a
10	RDa	Reset Drain, Quadrant a
11	H2SLa	Horizontal CCD Clock, Phase 2, Storage, Last Phase, Quadrant a
12	OGa	Output Gate, Quadrant a
13	H1Ba	Horizontal CCD Clock, Phase 1, Barrier, Quadrant a
14	H2Ba	Horizontal CCD Clock, Phase 2, Barrier, Quadrant a
15	H2Sa	Horizontal CCD Clock, Phase 2, Storage, Quadrant a
16	H1Sa	Horizontal CCD Clock, Phase 1, Storage, Quadrant a
17	N/C	No Connect
18	SUB	Substrate
19	H2Sb	Horizontal CCD Clock, Phase 2, Storage, Quadrant b
20	H1Sb	Horizontal CCD Clock, Phase 1, Storage, Quadrant b
21	H1Bb	Horizontal CCD Clock, Phase 1, Barrier, Quadrant b
22	H2Bb	Horizontal CCD Clock, Phase 2, Barrier, Quadrant b
23	H2SLb	Horizontal CCD Clock, Phase 1, Storage, Last Phase, Quadrant b
24	OGb	Output Gate, Quadrant b

Downloaded from Arrow.com.

Table 4. PGA PACKAGE PIN DESCRIPTION (continued)

Pin	Name	Description
25	Rb	Reset Gate, Quadrant b
26	RDb	Reset Drain, Quadrant b
27	GND	Ground
28	VOUTb	Video Output, Quadrant b
29	VDDb	Output Amplifier Supply, Quadrant b
30	V2B	Vertical CCD Clock, Phase 2, Bottom
31	V1B	Vertical CCD Clock, Phase 1, Bottom
32	V4B	Vertical CCD Clock, Phase 4, Bottom
33	V3B	Vertical CCD Clock, Phase 3, Bottom
34	ESD	ESD Protection Disable
35	V3T	Vertical CCD Clock, Phase 3, Top
36	DevID	Device Identification
37	V1T	Vertical CCD Clock, Phase 1, Top
38	V4T	Vertical CCD Clock, Phase 4, Top
39	VDDd	Output Amplifier Supply, Quadrant d
40	V2T	Vertical CCD Clock, Phase 2, Top
41	GND	Ground
42	VOUTd	Video Output, Quadrant d
43	Rd	Reset Gate, Quadrant d
44	RDd	Reset Drain, Quadrant d
45	H2SLd	Horizontal CCD Clock, Phase 2, Storage, Last Phase, Quadrant d
46	OGd	Output Gate, Quadrant d
47	H1Bd	Horizontal CCD Clock, Phase 1, Barrier, Quadrant d
48	H2Bd	Horizontal CCD Clock, Phase 2, Barrier, Quadrant d
49	H2Sd	Horizontal CCD Clock, Phase 2, Storage, Quadrant d
50	H1Sd	Horizontal CCD Clock, Phase 1, Storage, Quadrant d
51	N/C	No Connect
52	SUB	Substrate
53	H2Sc	Horizontal CCD Clock, Phase 2, Storage, Quadrant c
54	H1Sc	Horizontal CCD Clock, Phase 1, Storage, Quadrant c
55	H1Bc	Horizontal CCD Clock, Phase 1, Barrier, Quadrant c
56	H2Bc	Horizontal CCD Clock, Phase 2, Barrier, Quadrant c
57	H2SLc	Horizontal CCD Clock, Phase 2, Storage, Last Phase, Quadrant c
58	OGc	Output Gate, Quadrant c
59	Rc	Reset Gate, Quadrant c
60	RDc	Reset Drain, Quadrant c
61	GND	Ground
62	VOUTc	Video Output, Quadrant c
63	VDDc	Output Amplifier Supply, Quadrant c
64	V2T	Vertical CCD Clock, Phase 2, Top
65	V1T	Vertical CCD Clock, Phase 1, Top
66	V4T	Vertical CCD Clock, Phase 4, Top
67	V3T	Vertical CCD Clock, Phase 3, Top
68	ESD	EDS Protection Disable

1. Liked named pins are internally connected and should have a common drive signal.
2. N/C pins (17, 51) should be left floating.

Downloaded from Arrow.com.

Ceramic Leadless Chip Carrier Pin Description

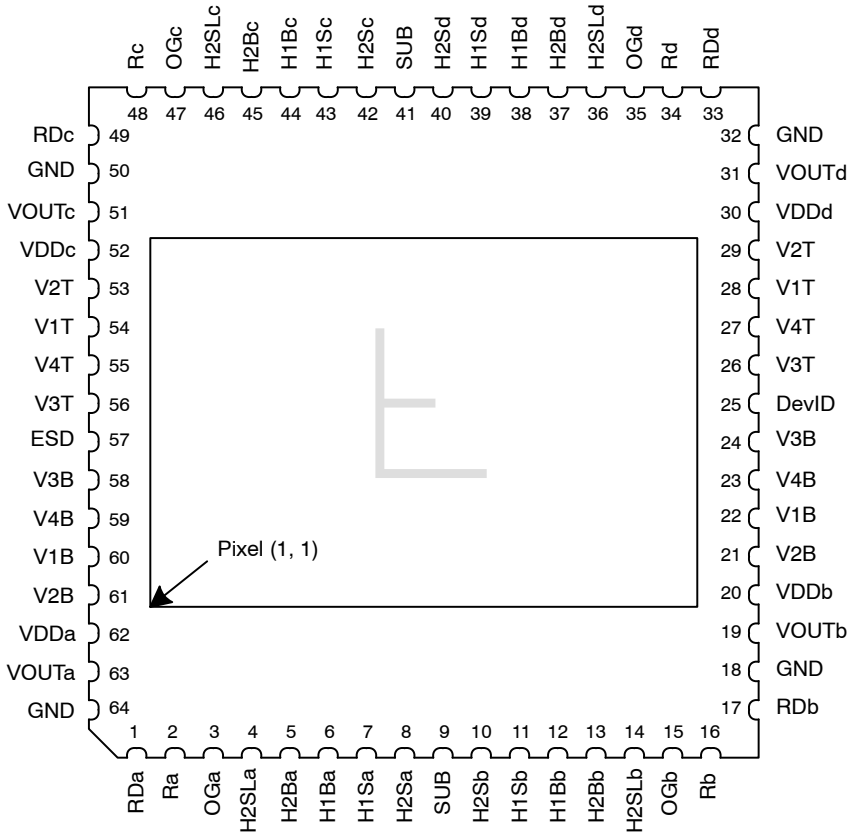

Figure 6. CLCC Package Pin Designations − Top View

Table 5. CLCC PACKAGE PIN DESCRIPTION

Pin	Name	Description
1	RDa	Reset Drain, Quadrant a
2	Ra	Reset Gate, Quadrant a
3	OGa	Output Gate, Quadrant a
4	H2SLa	Horizontal CCD Clock, Phase 2, Storage, Last Phase, Quadrant a
5	H2Ba	Horizontal CCD Clock, Phase 2, Barrier, Quadrant a
6	H1Ba	Horizontal CCD Clock, Phase 1, Barrier, Quadrant a
7	H1Sa	Horizontal CCD Clock, Phase 1, Storage, Quadrant a
8	H2Sa	Horizontal CCD Clock, Phase 2, Storage, Quadrant a
9	SUB	Substrate
10	H2Sb	Horizontal CCD Clock, Phase 2, Storage, Quadrant b
11	H1Sb	Horizontal CCD Clock, Phase 1, Storage, Quadrant b
12	H1Bb	Horizontal CCD Clock, Phase 1, Barrier, Quadrant b
13	H2Bb	Horizontal CCD Clock, Phase 2, Barrier, Quadrant b
14	H2SLb	Horizontal CCD Clock, Phase 2, Storage, Last Phase, Quadrant b
15	OGb	Output Gate, Quadrant b
16	Rb	Reset Gate, Quadrant b
17	RDb	Reset Drain, Quadrant b
18	GND	Ground
19	VOUTb	Video Output, Quadrant b

Downloaded from Arrow.com.

Table 5. CLCC PACKAGE PIN DESCRIPTION (continued)

Pin	Name	Description
20	VDDb	Output Amplifier Supply, Quadrant b
21	V2B	Vertical CCD Clock, Phase 2, Bottom
22	V1B	Vertical CCD Clock, Phase 1, Bottom
23	V4B	Vertical CCD Clock, Phase 4, Bottom
24	V3B	Vertical CCD Clock, Phase 3, Bottom
25	DevID	Device Identification
26	V3T	Vertical CCD Clock, Phase 3, Top
27	V4T	Vertical CCD Clock, Phase 4, Top
28	V1T	Vertical CCD Clock, Phase 1, Top
29	V2T	Vertical CCD Clock, Phase 2, Top
30	VDDd	Output Amplifier Supply, Quadrant d
31	VOUTd	Video Output, Quadrant d
32	GND	Ground
33	RDd	Reset Drain, Quadrant d
34	Rd	Reset Gate, Quadrant d
35	OGd	Output Gate, Quadrant d
36	H2SLd	Horizontal CCD Clock, Phase 2, Storage, Last Phase, Quadrant d
37	H2Bd	Horizontal CCD Clock, Phase 2, Barrier, Quadrant d
38	H1Bd	Horizontal CCD Clock, Phase 1, Barrier, Quadrant d
39	H1Sd	Horizontal CCD Clock, Phase 1, Storage, Quadrant d
40	H2Sd	Horizontal CCD Clock, Phase 2, Storage, Quadrant d
41	SUB	Substrate
42	H2Sc	Horizontal CCD Clock, Phase 2, Storage, Quadrant c
43	H1Sc	Horizontal CCD Clock, Phase 1, Storage, Quadrant c
44	H1Bc	Horizontal CCD Clock, Phase 1, Barrier, Quadrant c
45	H2Bc	Horizontal CCD Clock, Phase 2, Barrier, Quadrant c
46	H2SLc	Horizontal CCD Clock, Phase 2, Storage, Last Phase, Quadrant c
47	OGc	Output Gate, Quadrant c
48	Rc	Reset Gate, Quadrant c
49	RDc	Reset Drain, Quadrant c
50	GND	Ground
51	VOUTc	Video Output, Quadrant c
52	VDDc	Output Amplifier Supply, Quadrant c
53	V2T	Vertical CCD Clock, Phase 2, Top
54	V1T	Vertical CCD Clock, Phase 1, Top
55	V4T	Vertical CCD Clock, Phase 4, Top
56	V3T	Vertical CCD Clock, Phase 3, Top
57	ESD	ESD Protection Disable
58	V3B	Vertical CCD Clock, Phase 3, Bottom
59	V4B	Vertical CCD Clock, Phase 4, Bottom
60	V1B	Vertical CCD Clock, Phase 1, Bottom
61	V2B	Vertical CCD Clock, Phase 2, Bottom
62	VDDa	Output Amplifier Supply, Quadrant a
63	VOUTa	Video Output, Quadrant a
64	GND	Ground

1. Liked named pins are internally connected and should have a common drive signal.

Downloaded from Arrow.com.

IMAGING PERFORMANCE

Table 6. TYPICAL OPERATION CONDITIONS

Unless otherwise noted, the Imaging Performance Specifications are measured using the following conditions.

Description	Condition	Notes
Light Source	Continuous red, green and blue LED illumination	For monochrome sensor, only green LED used.
Operation	Nominal operating voltages and timing	

Table 7. SPECIFICATIONS

Description	Symbol	Min.	Nom.	Max.	Units	Sampling Plan	Temperature Tested At (°C)	Notes
Dark Field Global Non−Uniformity	DSNU	–	–	2.0	mVpp	Die	27, 40	
Bright Field Global Non−Uniformity		–	2.0	5.0	%rms	Die	27, 40	1
Bright Field Global Peak to Peak Non−Uniformity	PRNU	–	5.0	15.0	%pp	Die	27, 40	1
Bright Field Center Non−Uniformity		–	1.0	2.0	%rms	Die	27, 40	1
Maximum Photoresponse Nonlinearity	NL	–	2	–	%	Design		2
Maximum Gain Difference Between Outputs	ΔG	–	10	–	%	Design		2
Maximum Signal Error due to Nonlinearity Differences	ΔNL	–	1	–	%	Design		2
Horizontal CCD Charge Capacity	HNe	–	55	–	ke^-	Design		
Vertical CCD Charge Capacity	VNe	–	45	–	ke^-	Design		
Photodiode Charge Capacity	PNe	–	20	–	ke^-	Die	27, 40	3
Horizontal CCD Charge Transfer Efficiency	HCTE	0.999995	0.999999	–		Die		
Vertical CCD Charge Transfer Efficiency	VCTE	0.999995	0.999999	–		Die		
Photodiode Dark Current	Ipd	–	7	70	e/p/s	Die	40	
Vertical CCD Dark Current	Ivd	–	140	400	e/p/s	Die	40	
Image Lag	Lag	–	–	10	e^-	Design		
Antiblooming Factor	Xab	300	–	–		Design		
Vertical Smear	Smr	–	−100	–	dB	Design		
Read Noise	n_{e-T}	–	12	–	e^-rms	Design		4
Dynamic Range	DR	–	64	–	dB	Design		4, 5
Output Amplifier DC Offset	V_{odc}	–	9.4	–	V	Die	27, 40	
Output Amplifier Bandwidth	f_{-3db}	–	250	–	MHz	Die		6
Output Amplifier Impedance	R_{OUT}	–	127	–	Ω	Die	27, 40	
Output Amplifier Sensitivity	ΔV/ΔN	–	34	–	$\mu V/e^-$	Design		

1. Per color
2. Value is over the range of 10% to 90% of photodiode saturation.
3. The operating value of the substrate voltage, VAB, will be marked on the shipping container for each device. The value of VAB is set such that the photodiode charge capacity is 680 mV.
4. At 40 MHz
5. Uses 20LOG (PNe/ n_{e-T})
6. Assumes 5 pF load.

Downloaded from Arrow.com.

Table 8. KAI−01150−ABA AND KAI−01150−PBA CONFIGURATIONS

Description	Symbol	Min.	Nom.	Max.	Units	Sampling Plan	Temperature Tested At (°C)	Notes
Peak Quantum Efficiency	QE_{max}	–	44	–	%	Design		
Peak Quantum Efficiency Wavelength	λQE	–	480	–	nm	Design		

Table 9. KAI−01150−FBA AND KAI−01150−QBA GEN2 COLOR CONFIGURATIONS WITH MAR GLASS

Description		Symbol	Min.	Nom.	Max.	Units	Sampling Plan	Temperature Tested At (°C)	Notes
Peak Quantum Efficiency	Blue Green Red	QE_{max}	–	38 37 31	–	%	Design		
Peak Quantum Efficiency Wavelength	Blue Green Red	λQE	–	460 530 605	–	nm	Design		

Table 10. KAI−01150−CBA AND KAI−01150−PBA GEN1 COLOR CONFIGURATIONS WITH MAR GLASS

Description		Symbol	Min.	Nom.	Max.	Units	Sampling Plan	Temperature Tested At (°C)	Notes
Peak Quantum Efficiency	Blue Green Red	QE_{max}	–	39 37 29	–	%	Design		1
Peak Quantum Efficiency Wavelength	Blue Green Red	λQE	–	470 540 620	–	nm	Design		1

1. This color filter set configuration (Gen1) is not recommended for new designs.

Table 11. KAI−01150−FBA GEN2 COLOR CONFIGURATIONS WITH CLEAR GLASS

Description		Symbol	Min.	Nom.	Max.	Units	Sampling Plan	Temperature Tested At (°C)	Notes
Peak Quantum Efficiency	Blue Green Red	QE_{max}	–	35 34 29	–	%	Design		
Peak Quantum Efficiency Wavelength	Blue Green Red	λQE	–	460 530 605	–	nm	Design		

Table 12. KAI−01150−CBA GEN1 COLOR CONFIGURATIONS WITH CLEAR GLASS

Description		Symbol	Min.	Nom.	Max.	Units	Sampling Plan	Temperature Tested At (°C)	Notes
Peak Quantum Efficiency	Blue Green Red	QE_{max}	–	36 34 27	–	%	Design		1
Peak Quantum Efficiency Wavelength	Blue Green Red	λQE	–	470 540 620	–	nm	Design		1

1. This color filter set configuration (Gen1) is not recommended for new designs.

Downloaded from Arrow.com.

TYPICAL PERFORMANCE CURVES

Quantum Efficiency

Monochrome with Microlens

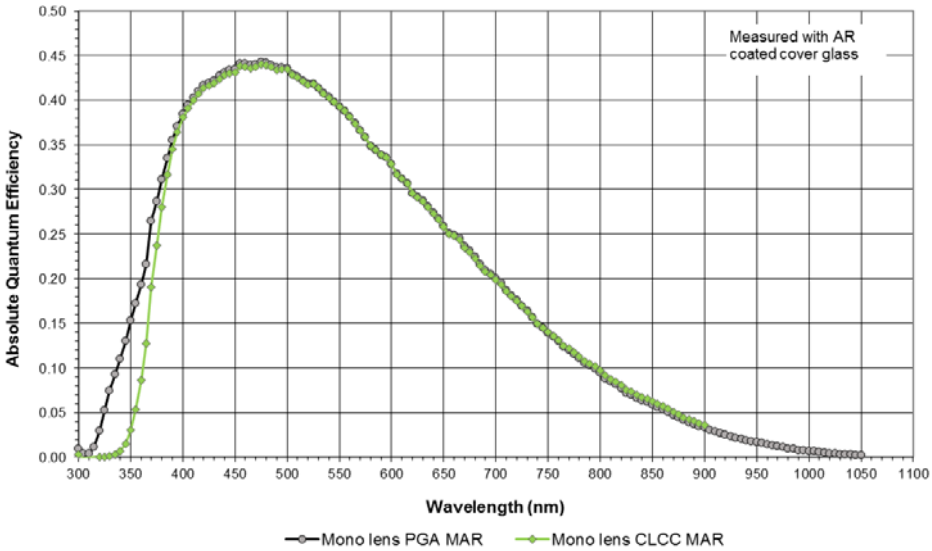

NOTE: The PGA and CLCC versions have different quantum efficiencies due to differences in the cover glass transmission. See Figure 34: Cover Glass Transmission for more details.

Figure 7. Monochrome with Microlens Quantum Efficiency

Color (Bayer RGB) with Microlens and MAR Cover Glass (Gen2 and Gen1 CFA)

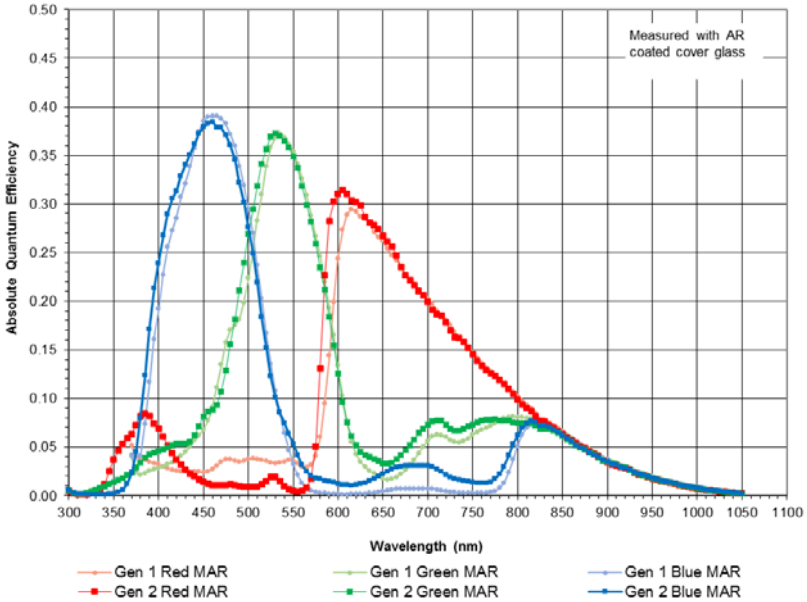

Figure 8. MAR Glass Color (Bayer) with Microlens Quantum Efficiency

Downloaded from Arrow.com.

Color (Bayer RGB) with Microlens and Clear Cover Glass (Gen2 and Gen1 CFA)

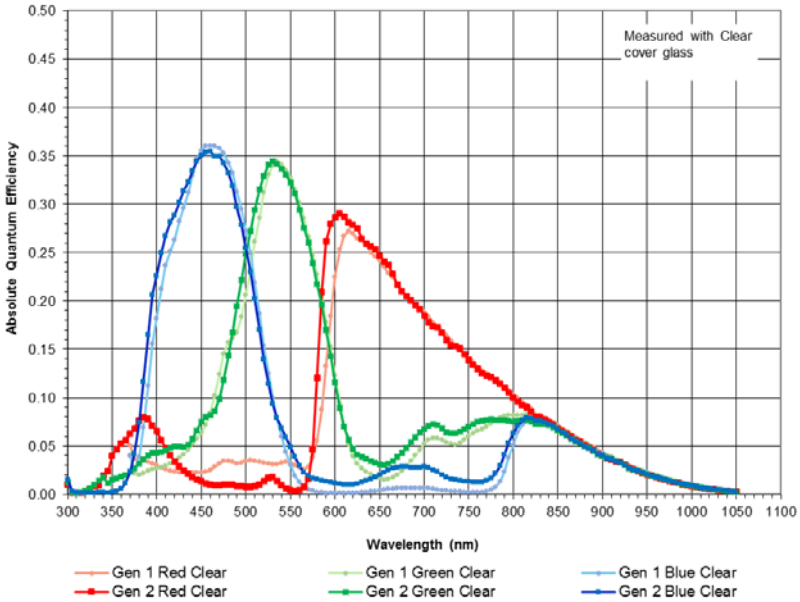

Figure 9. Clear Glass Color (Bayer) with Microlens Quantum Efficiency

Color (TRUESENSE Sparse CFA) with Microlens (Gen2 and Gen1 CFA)

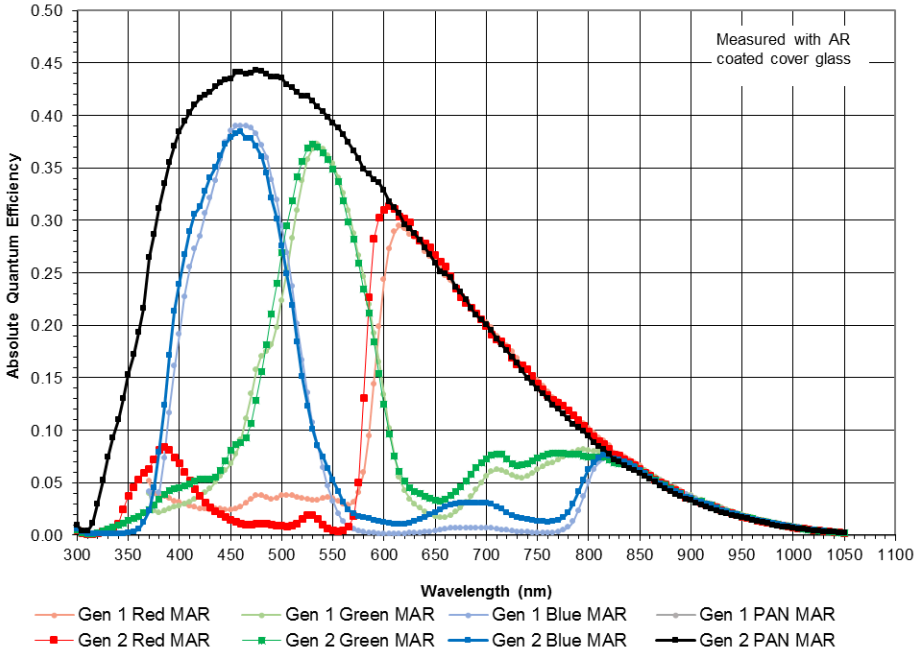

Figure 10. Color (TRUESENSE Sparse CFA) with Microlens Quantum Efficiency

Downloaded from Arrow.com.

Angular Quantum Efficiency

For the curves marked “Horizontal”, the incident light angle is varied in a plane parallel to the HCCD.
For the curves marked “Vertical”, the incident light angle is varied in a plane parallel to the VCCD.

Monochrome with Microlens

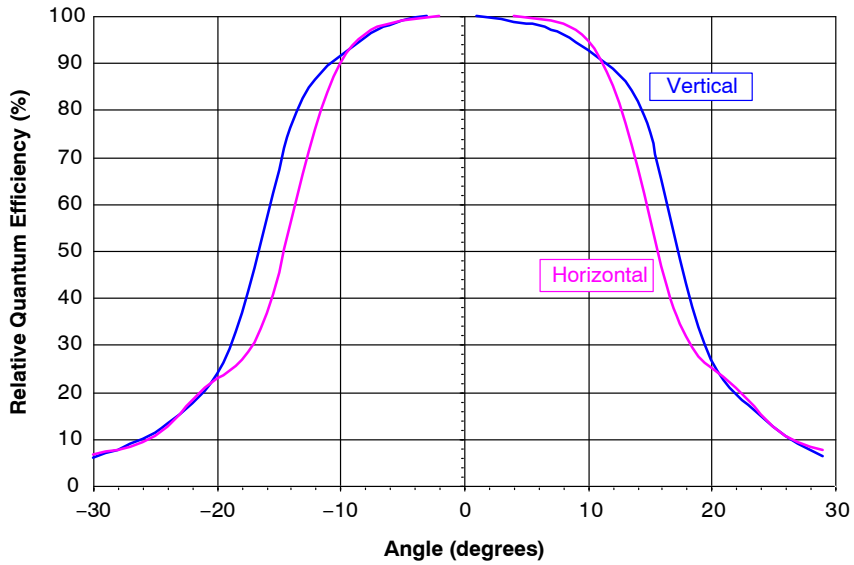

Figure 11. Monochrome with Microlens Angular Quantum Efficiency

Dark Current vs. Temperature

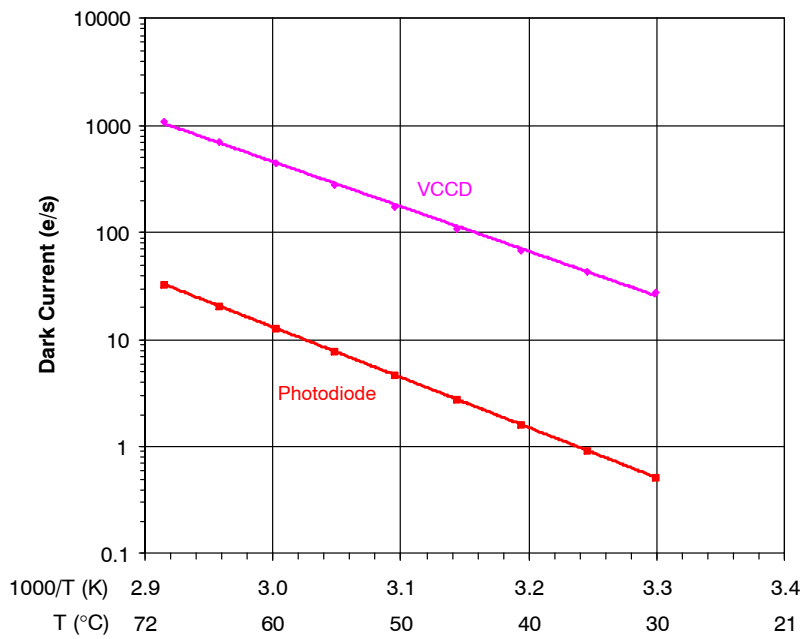

Figure 12. Dark Current vs. Temperature

Downloaded from Arrow.com.

Power-Estimated

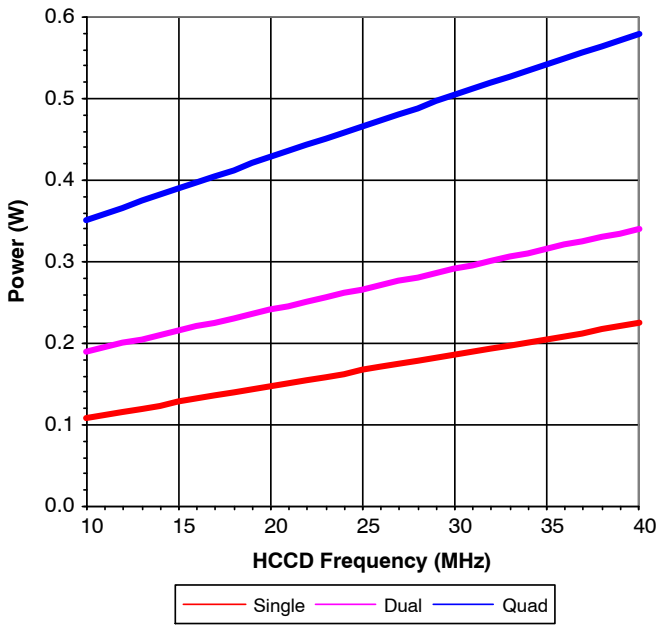

Figure 13. Power

Frame Rates

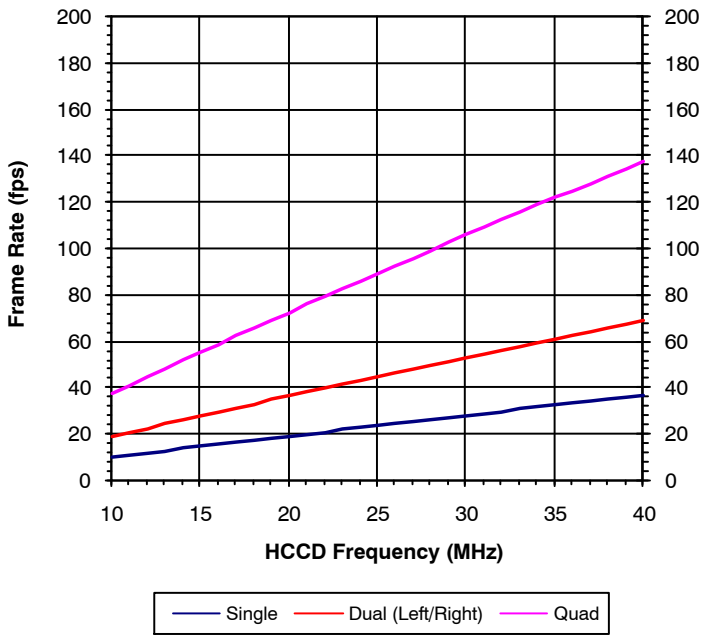

Figure 14. Frame Rates

Downloaded from Arrow.com.

DEFECT DEFINITIONS

Table 13. OPERATION CONDITIONS FOR DEFECT TESTING AT 40°C

Description	Condition	Notes
Operational Mode	Two Outputs, Using VOUTa and VOUTc, Continuous Readout	
HCCD Clock Frequency	10 MHz	
Pixels per Line	1520	1
Lines per Frame	480	2
Line Time	154.9 μs	
Frame Time	74.4 ms	
Photodiode Integration Time	Mode A: PD_Tint = Frame Time = 74.4 ms, No Electronic Shutter Used Mode B: PD_Tint = 33 ms, Electronic Shutter Used	
VCCD Integration Time	58.9 ms	3
Temperature	40°C	
Light Source	Continuous Red, Green and Blue LED Illumination	4
Operation	Nominal Operating Voltages and Timing	

1. Horizontal overclocking used.
2. Vertical overclocking used.
3. VCCD Integration Time = 380 lines × Line Time, which is the total time a pixel will spend in the VCCD registers.
4. For monochrome sensor, only the green LED is used.

Table 14. DEFECT DEFINITIONS FOR TESTING AT 40°C

Description	Definition	Standard Grade	Grade 2	Notes
Major Dark Field Defective Bright Pixel	PD_Tint = Mode A → Defect ≥ 25 mV or PD_Tint = Mode B → Defect ≥ 12 mV	10	10	1
Major Bright Field Defective Dark Pixel	Defect ≥ 12%	10	10	1
Minor Dark Field Defective Bright Pixel	PD_Tint = Mode A → Defect ≥ 13 mV or PD_Tint = Mode B → Defect ≥ 6 mV	100	100	
Cluster Defect (Standard Grade)	A group of 2 to 10 contiguous major defective pixels, but no more than 2 adjacent defects horizontally.	0	N/A	2
Cluster Defect (Grade 2)	A group of 2 to 10 contiguous major defective pixels.	N/A	5	2
Column Defect	A group of more than 10 contiguous major defective pixels along a single column.	0	0	2

1. For the color device (KAI−01150−CBA or KAI−01150−PBA), a bright field defective pixel deviates by 12% with respect to pixels of the same color.
2. Column and cluster defects are separated by no less than two (2) good pixels in any direction (excluding single pixel defects).

Downloaded from Arrow.com.

Table 15. OPERATION CONDITIONS FOR DEFECT TESTING AT 27°C

Description	Condition	Notes
Operational Mode	Two Outputs, Using VOUTa and VOUTc, Continuous Readout	
HCCD Clock Frequency	20 MHz	
Pixels per Line	1520	1
Lines per Frame	480	2
Line Time	77.8 μs	
Frame Time	37.3 ms	
Photodiode Integration Time (PD_Tint)	Mode A: PD_Tint = Frame Time = 37.3 ms, No Electronic Shutter Used Mode B: PD_Tint = 33 ms, Electronic Shutter Used	
VCCD Integration Time	29.5 ms	3
Temperature	27°C	
Light Source	Continuous Red, Green and Blue LED Illumination	4
Operation	Nominal Operating Voltages and Timing	

1. Horizontal overclocking used.
2. Vertical overclocking used.
3. VCCD Integration Time = 380 lines × Line Time, which is the total time a pixel will spend in the VCCD registers.
4. For monochrome sensor, only the green LED is used.

Table 16. DEFECT DEFINITIONS FOR TESTING AT 27°C

Description	Definition	Standard Grade	Grade 2	Notes
Major Dark Field Defective Bright Pixel	PD_Tint = Mode A → Defect ≥ 8 mV or PD_Tint = Mode B → Defect ≥ 4 mV	10	10	1
Major Bright Field Defective Dark Pixel	Defect ≥ 12%	10	10	1
Cluster Defect (Standard Grade)	A group of 2 to 10 contiguous major defective pixels, but no more than 2 adjacent defects horizontally.	0	N/A	2
Cluster Defect (Grade 2)	A group of 2 to 10 contiguous major defective pixels.	N/A	5	2
Column Defect	A group of more than 10 contiguous major defective pixels along a single column.	0	0	2

1. For the color device (KAI−01150−CBA or KAI−01150−PBA), a bright field defective pixel deviates by 12% with respect to pixels of the same color.
2. Column and cluster defects are separated by no less than two (2) good pixels in any direction (excluding single pixel defects).

Defect Map

The defect map supplied with each sensor is based upon testing at an ambient (27°C) temperature. Minor point defects are not included in the defect map. All defective pixels are reference to pixel 1, 1 in the defect maps. See Figure 15: Regions of Interest for the location of pixel 1, 1.

Downloaded from Arrow.com.

TEST DEFINITIONS

Test Regions of Interest

Image Area ROI:	Pixel (1, 1) to Pixel (1320, 736)
Active Area ROI:	Pixel (21, 9) to Pixel (1300, 728)
Center ROI:	Pixel (611, 319) to Pixel (710, 418)

Only the Active Area ROI pixels are used for performance and defect tests.

Overclocking

The test system timing is configured such that the sensor is overclocked in both the vertical and horizontal directions. See Figure 15 for a pictorial representation of the regions of interest.

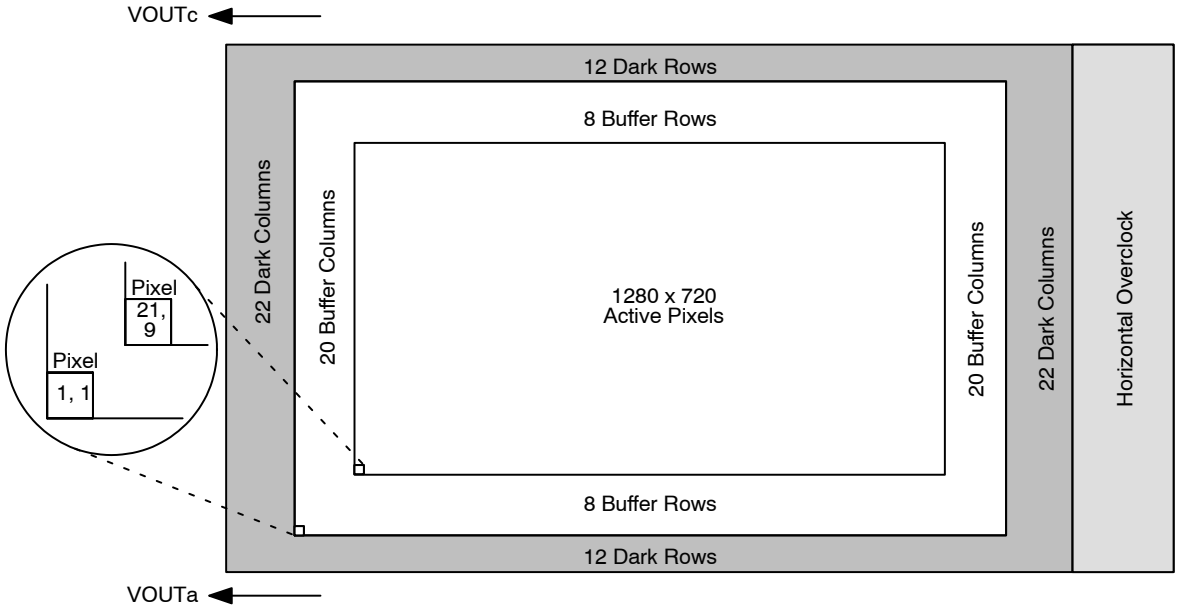

Figure 15. Regions of Interest

Tests

Dark Field Global Non-Uniformity

This test is performed under dark field conditions. The sensor is partitioned into 60 sub regions of interest, each of which is 128 by 120 pixels in size. See Figure 16: Test Sub Regions of Interest. The average signal level of each of the 60 sub regions of interest is calculated. The signal level of each of the sub regions of interest is calculated using the following formula:

$$\text{Signal of ROI[i]} = (\text{ROI Average in Counts} - \text{Horizontal Overclock Average in Counts}) \cdot \text{mV per Count}$$

Units : mVpp (millivolts Peak to Peak)

Where i = 1 to 144. During this calculation on the 60 sub regions of interest, the maximum and minimum signal levels are found. The dark field global uniformity is then calculated as the maximum signal found minus the minimum signal level found.

Global Non-Uniformity

This test is performed with the imager illuminated to a level such that the output is at 70% of saturation (approximately 476 mV). Prior to this test being performed the substrate voltage has been set such that the charge capacity of the sensor is 680 mV. Global non-uniformity is defined as

$$\text{Global Non-Uniformity} = 100 \cdot \left(\frac{\text{Active Area Standard Deviation}}{\text{Active Area Signal}}\right)$$

Units : % rms

Active Area Signal = Active Area Average − Dark Column Average

Global Peak to Peak Non-Uniformity

This test is performed with the imager illuminated to a level such that the output is at 70% of saturation (approximately 476 mV). Prior to this test being performed the substrate voltage has been set such that the charge capacity of the sensor is 680 mV. The sensor is partitioned into 60 sub regions of interest, each of which is 128 by 120 pixels in size. See Figure 16: Test Sub Regions of Interest. The average signal level of each of the 60 sub regions of interest (ROI) is calculated. The signal level of each of the sub regions of interest is calculated using the following formula:

$$\text{Signal of ROI[i]} = (\text{ROI Average in Counts} - \text{Horizontal Overclock Average in Counts}) \cdot \text{mV per Count}$$

Downloaded from Arrow.com.

Where i = 1 to 60. During this calculation on the 60 sub regions of interest, the maximum and minimum signal levels are found. The global peak to peak uniformity is then calculated as:

$$\text{Global Uniformity} = 100 \cdot \left(\frac{\text{Max. Signal} - \text{Min. Signal}}{\text{Active Area Signal}}\right)$$

Units : % pp

Center Non-Uniformity

This test is performed with the imager illuminated to a level such that the output is at 70% of saturation (approximately 476 mV). Prior to this test being performed the substrate voltage has been set such that the charge capacity of the sensor is 680 mV. Defects are excluded for the calculation of this test. This test is performed on the center 100 by 100 pixels of the sensor. Center uniformity is defined as:

$$\text{Center ROI Uniformity} = 100 \cdot \left(\frac{\text{Center ROI Standard Deviation}}{\text{Center ROI Signal}}\right)$$

Units : % rms

Center ROI Signal = Center ROI Average − Dark Colum Average

Dark Field Defect Test

This test is performed under dark field conditions. The sensor is partitioned into 60 sub regions of interest, each of which is 128 by 120 pixels in size. In each region of interest, the median value of all pixels is found. For each region of interest, a pixel is marked defective if it is greater than or equal to the median value of that region of interest plus the defect threshold specified in the “Defect Definitions” section.

Bright Field Defect Test

This test is performed with the imager illuminated to a level such that the output is at approximately 476 mV. Prior to this test being performed the substrate voltage has been set such that the charge capacity of the sensor is 680 mV. The average signal level of all active pixels is found. The bright and dark thresholds are set as:

Dark Defect Threshold = Active Area Signal · Threshold

Bright Defect Threshold = Active Area Signal · Threshold

The sensor is then partitioned into 60 sub regions of interest, each of which is 128 by 120 pixels in size. In each region of interest, the average value of all pixels is found. For each region of interest, a pixel is marked defective if it is greater than or equal to the median value of that region of interest plus the bright threshold specified or if it is less than or equal to the median value of that region of interest minus the dark threshold specified.

Example for major bright field defective pixels:

- Average value of all active pixels is found to be 476 mV.
- Dark defect threshold: 476 mV · 12 % = 57 mV.
- Bright defect threshold: 476 mV · 12 % = 57 mV.
- Region of interest #1 selected. This region of interest is pixels 21, 9 to pixels 148, 128.
  - Median of this region of interest is found to be 470 mV.
  - Any pixel in this region of interest that is ≥ (470 + 57 mV) 527 mV in intensity will be marked defective.
  - Any pixel in this region of interest that is ≤ (470 − 57 mV) 413 mV in intensity will be marked defective.
- All remaining 60 sub regions of interest are analyzed for defective pixels in the same manner.

Test Sub Regions of Interest

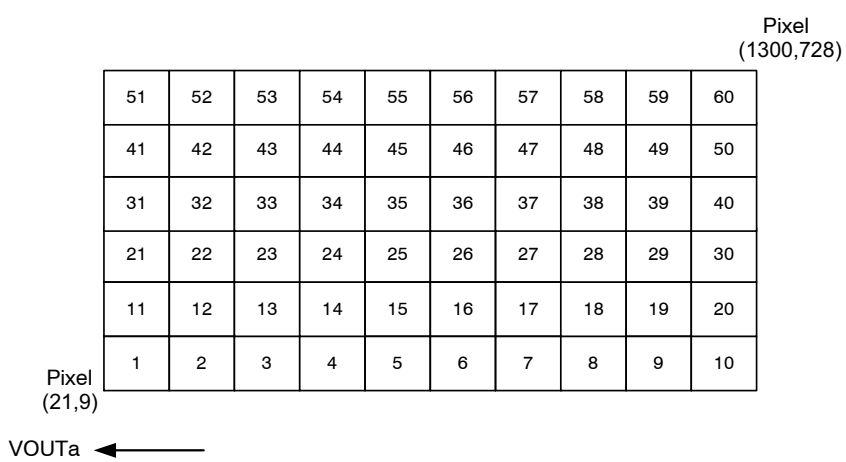

Figure 16. Test Sub Regions of Interest

Downloaded from Arrow.com.

OPERATION

Absolute Maximum Ratings

Absolute maximum rating is defined as a level or condition that should not be exceeded at any time per the description. If the level or the condition is exceeded, the device will be degraded and may be damaged. Operation at these values will reduce MTTF.

Table 17. ABSOLUTE MAXIMUM RATINGS

Description	Symbol	Minimum	Maximum	Unit	Notes
Operating Temperature	T_{OP}	−50	70	°C	1
Humidity	RH	5	90	%	2
Output Bias Current	I_{OUT}	–	60	mA	3
Off-Chip Load	C_L	–	10	pF	

Stresses exceeding those listed in the Maximum Ratings table may damage the device. If any of these limits are exceeded, device functionality should not be assumed, damage may occur and reliability may be affected.

1. Noise performance will degrade at higher temperatures.
2. T = 25°C. Excessive humidity will degrade MTTF.
3. Total for all outputs. Maximum current is −15 mA for each output. Avoid shorting output pins to ground or any low impedance source during operation. Amplifier bandwidth increases at higher current and lower load capacitance at the expense of reduced gain (sensitivity).

Table 18. ABSOLUTE MAXIMUM VOLTAGE RATINGS BETWEEN PINS AND GROUND

Description	Minimum	Maximum	Unit	Notes
VDDα, VOUTα	−0.4	17.5	V	1
RDα	−0.4	15.5	V	1
V1B, V1T	ESD − 0.4	ESD + 24.0	V	
V2B, V2T, V3B, V3T, V4B, V4T	ESD − 0.4	ESD + 14.0	V	
H1Sα, H1Bα, H2Sα, H2Bα, H2SLα, Rα, OGα	ESD − 0.4	ESD + 14.0	V	1
ESD	−10.0	0.0	V	
SUB	−0.4	40.0	V	2

1. α denotes a, b, c or d.
2. Refer to Application Note *Using Interline CCD Image Sensors in High Intensity Visible Lighting Conditions*

Downloaded from Arrow.com.

Power-Up and Power-Down Sequence

Adherence to the power-up and power-down sequence is critical. Failure to follow the proper power-up and power-down sequences may cause damage to the sensor.

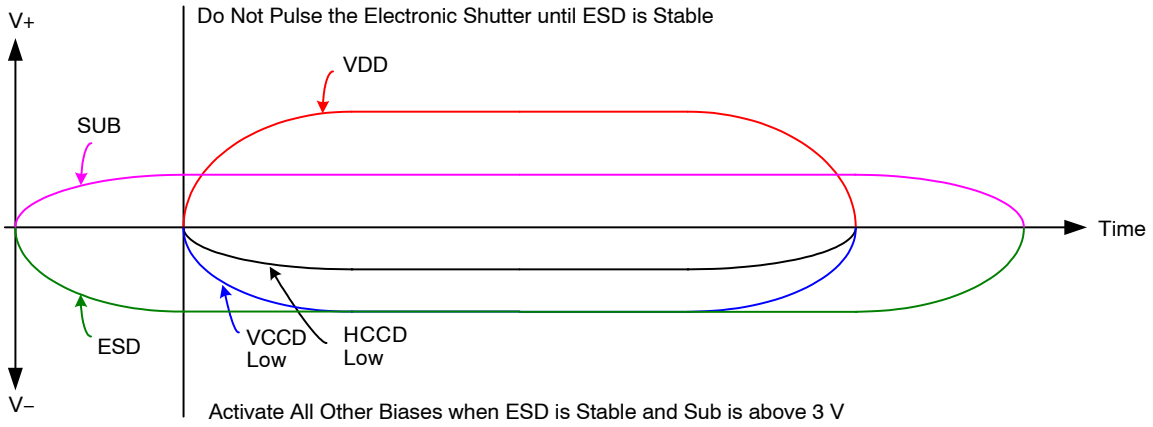

Notes:
1. Activate all other biases when ESD is stable and SUB is above 3 V.
2. Do not pulse the electronic shutter until ESD is stable.
3. VDD cannot be +15 V when SUB is 0 V.
4. The image sensor can be protected from an accidental improper ESD voltage by current limiting the SUB current to less than 10 mA. SUB and VDD must always be greater than GND. ESD must always be less than GND. Placing diodes between SUB, VDD, ESD and ground will protect the sensor from accidental overshoots of SUB, VDD and ESD during power on and power off. See the figure below.

Figure 17. Power-Up and Power-Down Sequence

The VCCD clock waveform must not have a negative overshoot more than 0.4 V below the ESD voltage.

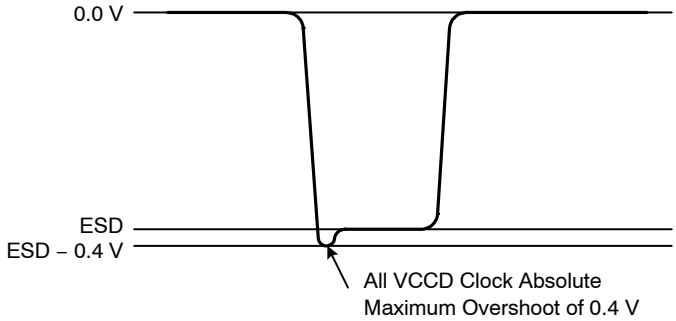

Figure 18. VCCD Clock Waveform

Example of external diode protection for SUB, VDD and ESD.α denotes a, b, c or d.

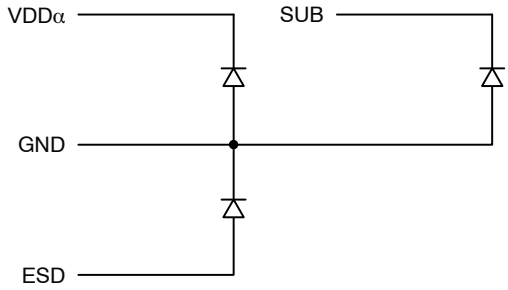

Figure 19. Example of External Diode Protection

Downloaded from Arrow.com.

DC Bias Operating Conditions

Table 19. DC BIAS OPERATING CONDITIONS

Description	Pins	Symbol	Min.	Nom.	Max.	Unit	Max. DC Current	Notes
Reset Drain	RDα	RD	11.8	12.0	12.2	V	10 μA	1
Output Gate	OGα	OG	−2.2	−2.0	−1.8	V	10 μA	1
Output Amplifier Supply	VDDα	V_{DD}	14.5	15.0	15.5	V	11.0 mA	1, 2
Ground	GND	GND	0.0	0.0	0.0	V	−1.0 mA	
Substrate	SUB	V_{SUB}	5.0	V_{AB}	V_{DD}	V	50 μA	3, 8
ESD Protection Disable	ESD	ESD	−9.5	−9.0	Vx_L	V	50 μA	6, 7, 9
Output Bias Current	VOUTα	I_{OUT}	−3.0	−7.0	−10.0	mA	–	1, 4, 5

1. α denotes a, b, c or d.
2. The maximum DC current is for one output. $I_{DD} = I_{OUT} + I_{SS}$. See Figure 20.
3. The operating value of the substrate voltage, V_{AB}, will be marked on the shipping container for each device. The value of V_{AB} is set such that the photodiode charge capacity is the nominal P_{Ne} (see Specifications).
4. An output load sink must be applied to each VOUT pin to activate each output amplifier.
5. Nominal value required for 40 MHz operation per output. May be reduced for slower data rates and lower noise.
6. Adherence to the power-up and power-down sequence is critical. See Power Up and Power Down Sequence section.
7. ESD maximum value must be less than or equal to V1_L + 0.4 V and V2_L + 0.4 V.
8. Refer to Application Note *Using Interline CCD Image Sensors in High Intensity Visible Lighting Conditions.*
9. Where Vx_L is the level set for V1_L, V2_L, V3_L, or V4_L in the application.

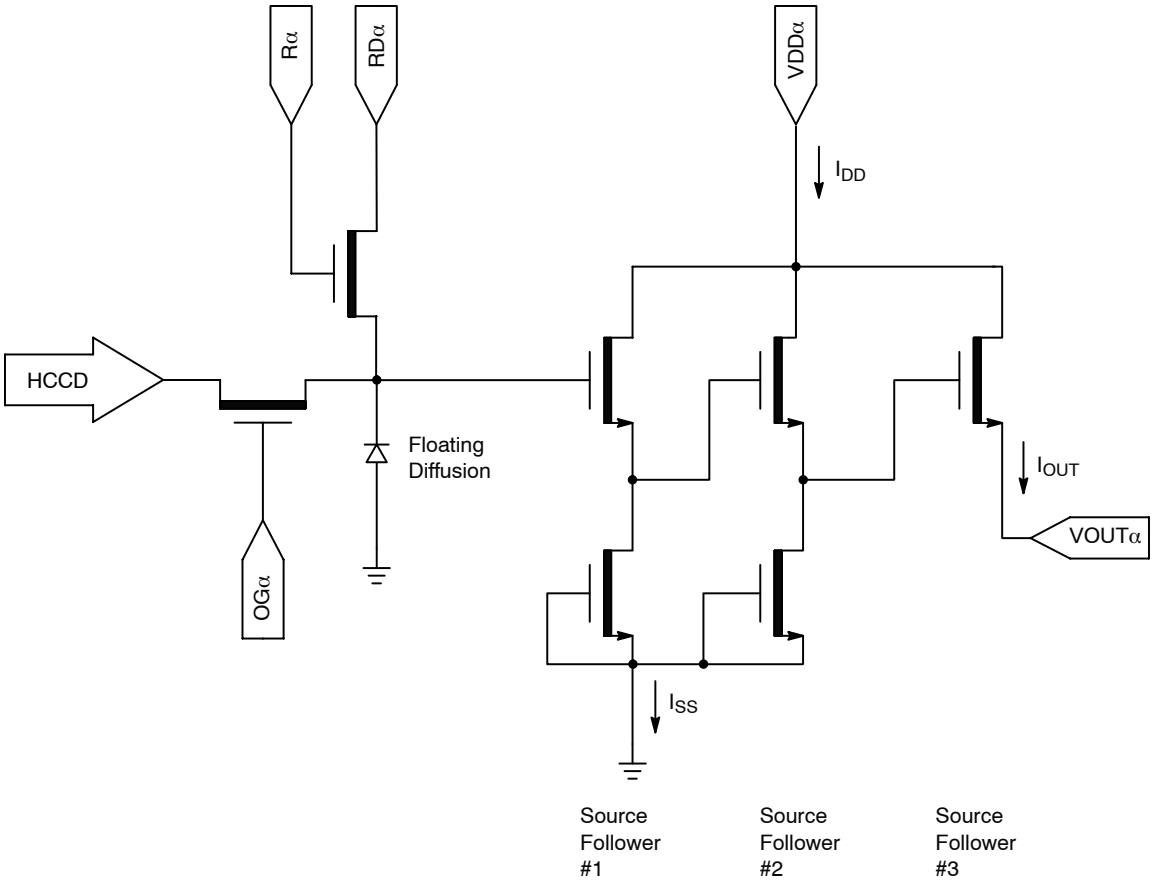

Figure 20. Output Amplifier

Downloaded from Arrow.com.

AC Operating Conditions

Table 20. CLOCK LEVELS

Description	Pins (Note 1)	Symbol	Level	Min.	Nom.	Max.	Unit	Capacitance (Note 2)
Vertical CCD Clock, Phase 1	V1B, V1T	V1_L	Low	−8.2	−8.0	−7.8	V	6 nF (Note 6)
		V1_M	Mid	−0.2	0.0	0.2		
		V1_H	High	11.5	12.0	12.5		
Vertical CCD Clock, Phase 2	V2B, V2T	V2_L	Low	−8.2	−8.0	−7.8	V	6 nF (Note 6)
		V2_H	High	−0.2	0.0	0.2		
Vertical CCD Clock, Phase 3	V3B, V3T	V3_L	Low	−8.2	−8.0	−7.8	V	6 nF (Note 6)
		V3_H	High	−0.2	0.0	0.2		
Vertical CCD Clock, Phase 4	V4B, V4T	V4_L	Low	−8.2	−8.0	−7.8	V	6 nF (Note 6)
		V4_H	High	−0.2	0.0	0.2		
Horizontal CCD Clock, Phase 1 Storage	H1Sα	H1S_L	Low	−5.2 (Note 7)	−4.0	−3.8	V	90 pF (Note 6)
		H1S_A	Amplitude	3.8	4.0	5.2 (Note 7)		
Horizontal CCD Clock, Phase 1 Barrier	H1Bα	H1B_L	Low	−5.2 (Note 7)	−4.0	−3.8	V	60 pF (Note 6)
		H1B_A	Amplitude	3.8	4.0	5.2 (Note 7)		
Horizontal CCD Clock, Phase 2 Storage	H2Sα	H2S_L	Low	−5.2 (Note 7)	−4.0	−3.8	V	90 pF (Note 6)
		H2S_A	Amplitude	3.8	4.0	5.2 (Note 7)		
Horizontal CCD Clock, Phase 2 Barrier	H2Bα	H2B_L	Low	−5.2 (Note 7)	−4.0	−3.8	V	60 pF (Note 6)
		H2B_A	Amplitude	3.8	4.0	5.2 (Note 7)		
Horizontal CCD Clock, Last Phase (Note 3)	H2SLα	H2SL_L	Low	−5.2	−5.0	−4.8	V	20 pF (Note 6)
		H2SL_A	Amplitude	4.8	5.0	5.2		
Reset Gate	Rα	R_L (Note 4)	Low	−3.5	−2.0	−1.5	V	16 pF (Note 6)
		R_H	High	2.5	3.0	4.0		
Electronic Shutter (Note 5)	SUB	VES	High	29.0	30.0	40.0	V	400 pF (Note 6)

1. α denotes a, b, c or d.
2. Capacitance is total for all like named pins.
3. Use separate clock driver for improved speed performance.
4. Reset low should be set to −3 V for signal levels greater than 40,000 electrons.
5. Refer to Application Note *Using Interline CCD Image Sensors in High Intensity Visible Lighting Conditions.*
6. Capacitance values are estimated.
7. If the minimum horizontal clock low level is used (−5.2 V), then the maximum horizontal clock amplitude should be used (5.2 V amplitude) to create a −5.2 V to 0.0 V clock. If a 5 V clock driver is used, the horizontal low level should be set to −5.0 V and the high level should be a set to 0.0 V.

Downloaded from Arrow.com.

The figure below shows the DC bias (VSUB) and AC clock (VES) applied to the SUB pin. Both the DC bias and AC clock are referenced to ground.

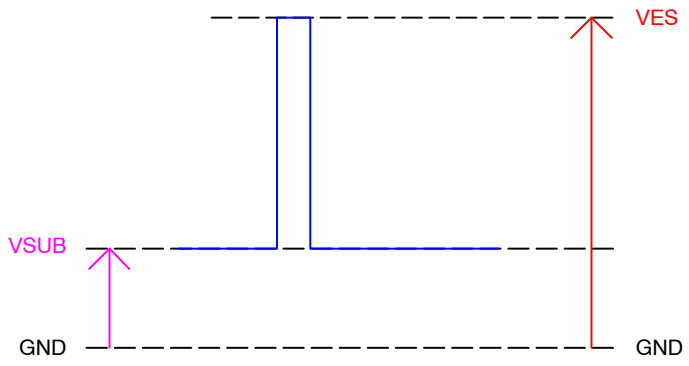

Figure 21. DC Bias and AC Clock Applied to the SUB Pin

Device Identification

The device identification pin (DevID) may be used to determine which ON Semiconductor 5.5 micron pixel interline CCD sensor is being used.

Table 21.

Description	Pins	Symbol	Min.	Nom.	Max.	Unit	Max. DC Current	Notes
Device Identification	DevID	DevID	4,000	5,000	6,000	Ω	50 μA	1, 2, 3

1. Nominal value subject to verification and/or change during release of preliminary specifications.
2. If the Device Identification is not used, it may be left disconnected.
3. After Device Identification resistance has been read during camera initialization, it is recommended that the circuit be disabled to prevent localized heating of the sensor due to current flow through the R_DeviceID resistor.

Recommended Circuit

Note that V1 must be a different value than V2.

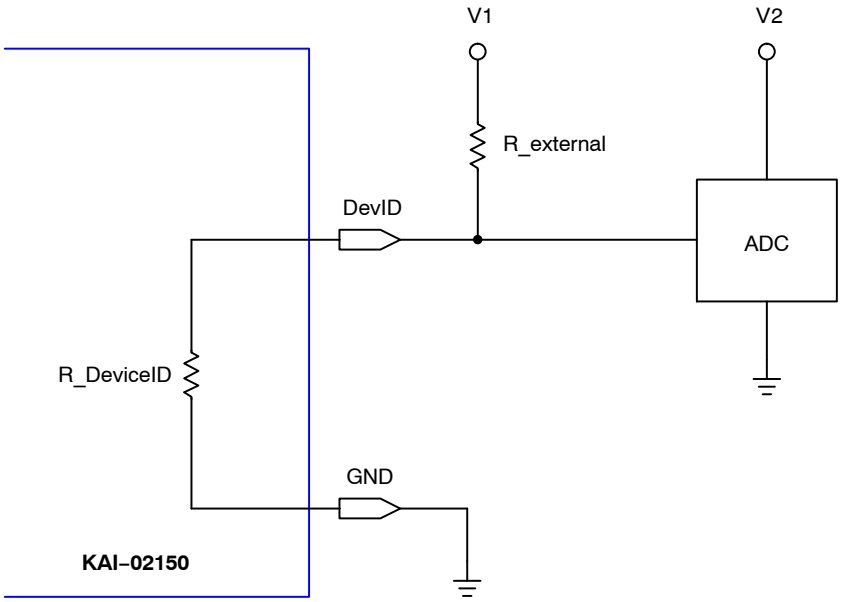

Figure 22. Device Identification Recommended Circuit

Downloaded from Arrow.com.

TIMING

Table 22. REQUIREMENTS AND CHARACTERISTICS

Description	Symbol	Min.	Nom.	Max.	Unit	Notes
Photodiode Transfer	t_{PD}	1.0	–	–	μs	
VCCD Leading Pedestal	t_{3P}	4.0	–	–	μs	
VCCD Trailing Pedestal	t_{3D}	4.0	–	–	μs	
VCCD Transfer Delay	t_D	1.0	–	–	μs	
VCCD Transfer	t_V	1.0	–	–	μs	
VCCD Clock Cross-Over	V_{VCR}	75	–	100	%	2
VCCD Rise, Fall Times	t_{VR}, t_{VF}	5	–	10	%	2, 3
HCCD Delay	t_{HS}	0.2	–	–	μs	
HCCD Transfer	t_e	25.0	–	–	ns	
Shutter Transfer	t_{SUB}	1.0	–	–	μs	
Shutter Delay	t_{HD}	1.0	–	–	μs	
Reset Pulse	t_R	2.5	–	–	ns	
Reset – Video Delay	t_{RV}	–	2.2	–	ns	
H2SL – Video Delay	t_{HV}	–	3.1	–	ns	
Line Time	t_{LINE}	19.0	–	–	μs	Dual HCCD Readout
		36.1	–	–		Single HCCD Readout
Frame Time	t_{FRAME}	7.2	–	–	ms	Quad HCCD Readout
		14.5	–	–		Dual HCCD Readout
		26.8	–	–		Single HCCD Readout

1. Refer to timing diagrams as shown in Figure 23, Figure 24, Figure 25, Figure 26 and Figure 27.
2. Refer to Figure 27: VCCD Clock Rise Time, Fall Time and Edge Alignment
3. Relative to the pulse width.

Downloaded from Arrow.com.

Timing Diagrams

The timing sequence for the clocked device pins may be represented as one of seven patterns (P1−P7) as shown in the table below. The patterns are defined in Figure 23 and Figure 24. Contact ON Semiconductor Application Engineering for other readout modes.

Table 23. TIMING DIAGRAMS

Device Pin	Quad Readout	Dual Readout VOUTa, VOUTb	Dual Readout VOUTa, VOUTc	Single Readout VOUTa
V1T	P1T	P1B	P1T	P1B
V2T	P2T	P4B	P2T	P4B
V3T	P3T	P3B	P3T	P3B
V4T	P4T	P2B	P4T	P2B
V1B	P1B			
V2B	P2B			
V3B	P3B			
V4B	P4B			
H1Sa	P5			
H1Ba	P5			
H2Sa (Note 2)	P6			
H2Ba	P6			
Ra	P7			
H1Sb	P5		P5	
H1Bb	P5		P6	
H2Sb (Note 2)	P6		P6	
H2Bb	P6		P5	
Rb	P7		P7 (Note 1) or Off (Note 3)	P7 (Note 1) or Off (Note 3)
H1Sc	P5	P5 (Note 1) or Off (Note 3)	P5	P5 (Note 1) or Off (Note 3)
H1Bc	P5	P5 (Note 1) or Off (Note 3)	P5	P5 (Note 1) or Off (Note 3)
H2Sc (Note 2)	P6	P6 (Note 1) or Off (Note 3)	P6	P6 (Note 1) or Off (Note 3)
H2Bc	P6	P6 (Note 1) or Off (Note 3)	P6	P6 (Note 1) or Off (Note 3)
Rc	P7	P7 (Note 1) or Off (Note 3)	P7	P7 (Note 1) or Off (Note 3)
H1Sd	P5	P5 (Note 1) or Off (Note 3)	P5	P5 (Note 1) or Off (Note 3)
H1Bd	P5	P5 (Note 1) or Off (Note 3)	P6	P5 (Note 1) or Off (Note 3)
H2Sd (Note 2)	P6	P6 (Note 1) or Off (Note 3)	P6	P6 (Note 1) or Off (Note 3)
H2Bd	P6	P6 (Note 1) or Off (Note 3)	P5	P6 (Note 1) or Off (Note 3)
Rd	P7	P7 (Note 1) or Off (Note 3)	P7 (Note 1) or Off (Note 3)	P7 (Note 1) or Off (Note 3)

#Lines/Frame (Minimum)	380	760	380	760
#Pixels/Line (Minimum)	693		1386	

1. For optimal performance of the sensor. May be clocked at a lower frequency. If clocked at a lower frequency, the frequency selected should be a multiple of the frequency used on the a and b register.
2. H2SLx follows the same pattern as H2Sx For optimal speed performance, use a separate clock driver.
3. Off = +5 V. Note that there may be operating conditions (high temperature and/or very bright light sources) that will cause blooming from the unused c/d register into the image area.

Downloaded from Arrow.com.

Photodiode Transfer Timing

A row of charge is transferred to the HCCD on the falling edge of V1 as indicated in the P1 pattern below. Using this timing sequence, the leading dummy row or line is combined with the first dark row in the HCCD. The “Last Line” is dependent on readout mode – either 380 or 760 minimum counts required. It is important to note that, in general, the rising edge of a vertical clock (patterns P1−P4) should be coincident or slightly leading a falling edge at the same time interval. This is particularly true at the point where P1 returns from the high (3rd level) state to the mid-state when P4 transitions from the low state to the high state.

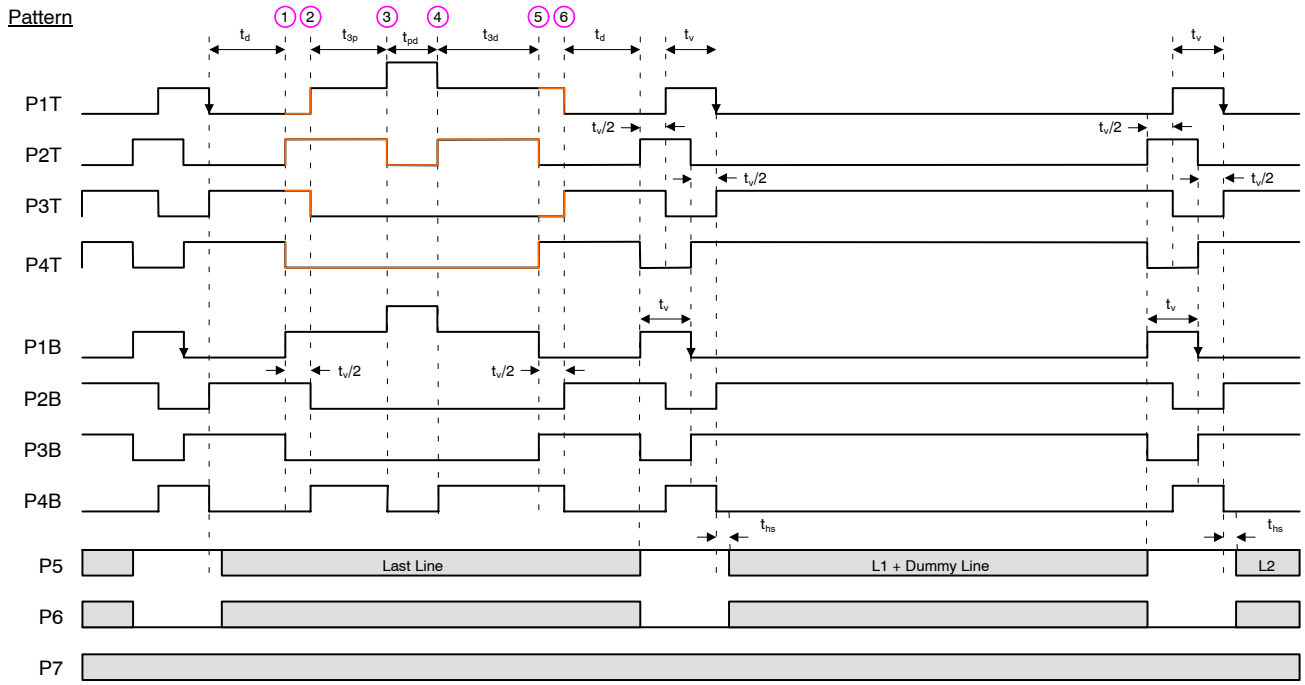

Figure 23. Photodiode Transfer Timing

Line and Pixel Timing

Each row of charge is transferred to the output, as illustrated below, on the falling edge of H2SL (indicated as P6 pattern). The number of pixels in a row is dependent on readout mode – either 693 or 1386 minimum counts required.

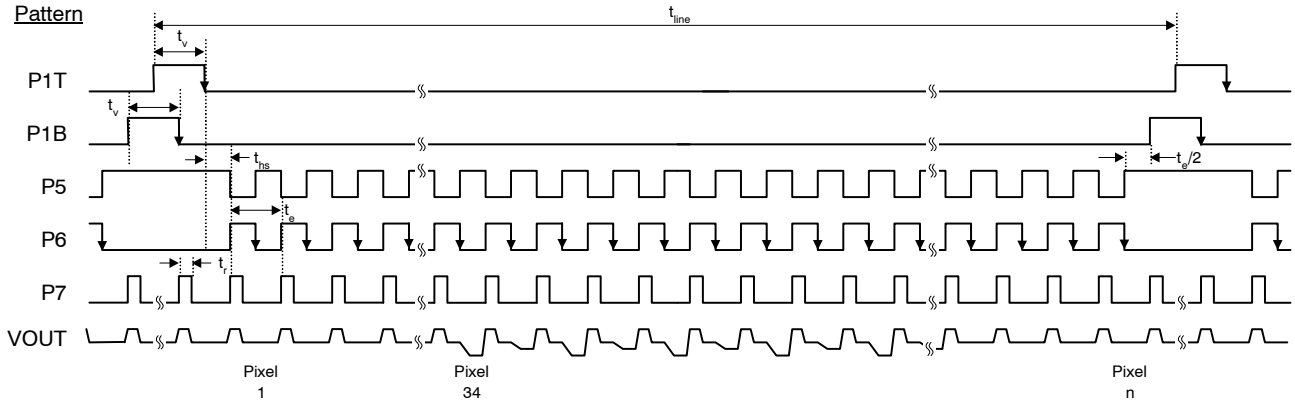

Figure 24. Line and Pixel Timing

Downloaded from Arrow.com.

Pixel Timing Detail

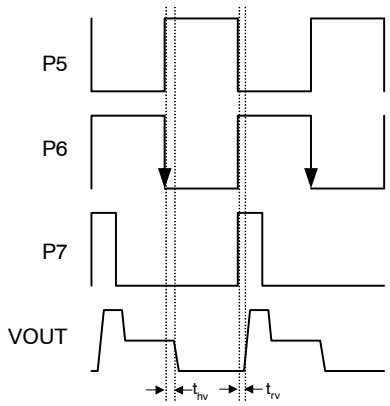

Figure 25. Pixel Timing Detail

Frame/Electronic Shutter Timing

The SUB pin may be optionally clocked to provide electronic shuttering capability as shown below. The resulting photodiode integration time is defined from the falling edge of SUB to the falling edge of V1 (P1 pattern).

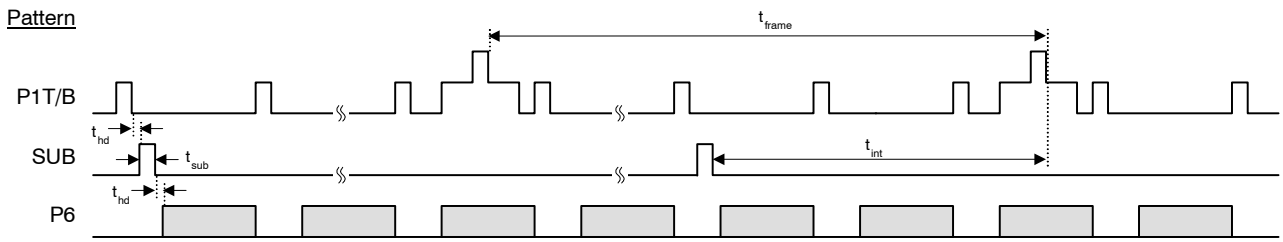

Figure 26. Frame/Electronic Shutter Timing

VCCD Clock Rise Time, Fall Time and Edge Alignment

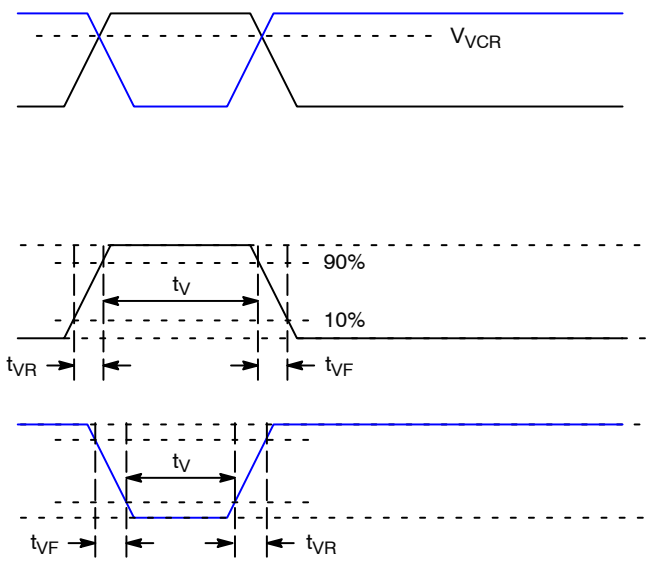

Figure 27. VCCD Clock Rise Time, Fall Time and Edge Alignment

Downloaded from Arrow.com.

Line and Pixel Timing − Vertical Binning by 2

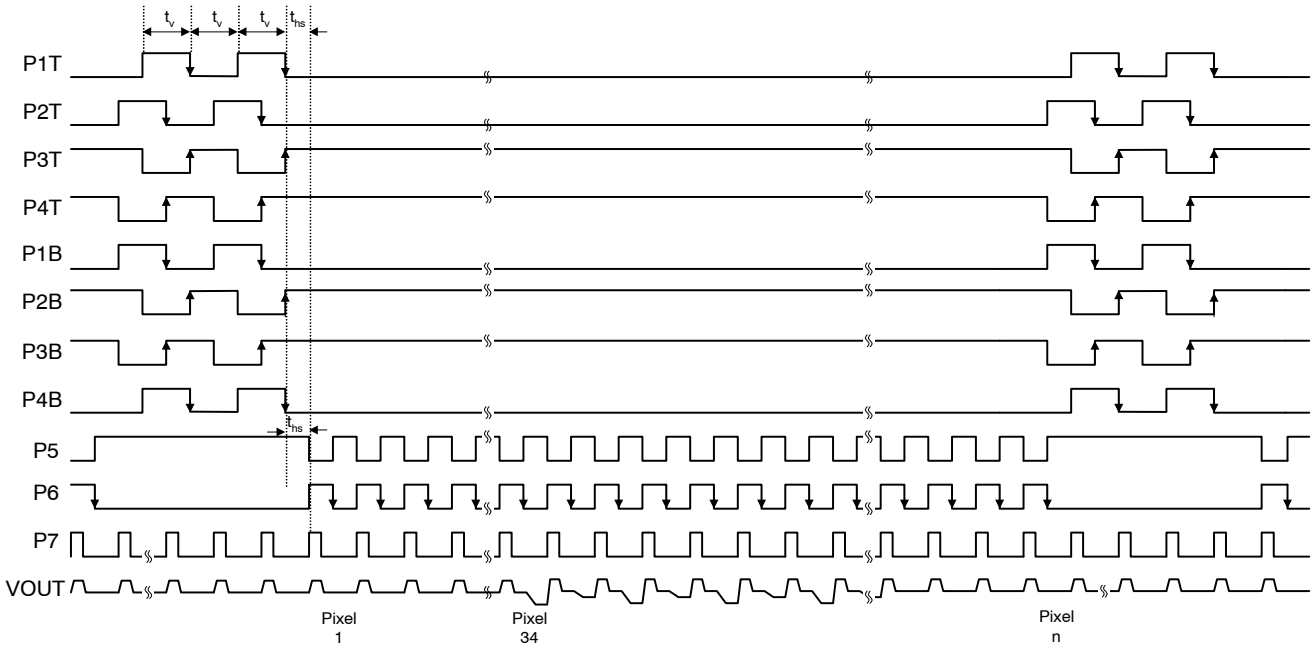

Figure 28. Line and Pixel Timing − Vertical Binning by 2

Downloaded from Arrow.com.

STORAGE AND HANDLING

Table 24. STORAGE CONDITIONS

Description	Symbol	Minimum	Maximum	Units	Notes
Storage Temperature	T_{ST}	−55	80	°C	1
Humidity	RH	5	90	%	2

1. Long-term storage toward the maximum temperature will accelerate color filter degradation.
2. T = 25°C. Excessive humidity will degrade MTTF.

For information on ESD and cover glass care and cleanliness, please download the *Image Sensor Handling and Best Practices* Application Note (AN52561/D) from www.onsemi.com.

For information on environmental exposure, please download the *Using Interline CCD Image Sensors in High Intensity Lighting Conditions* Application Note (AND9183/D) from www.onsemi.com.

For information on soldering recommendations, please download the Soldering and Mounting Techniques Reference Manual (SOLDERRM/D) from www.onsemi.com.

For quality and reliability information, please download the *Quality & Reliability* Handbook (HBD851/D) from www.onsemi.com.

For information on device numbering and ordering codes, please download the *Device Nomenclature* technical note (TND310/D) from www.onsemi.com.

For information on Standard terms and Conditions of Sale, please download Terms and Conditions from www.onsemi.com.

Downloaded from Arrow.com.

MECHANICAL INFORMATION

PGA Completed Assembly

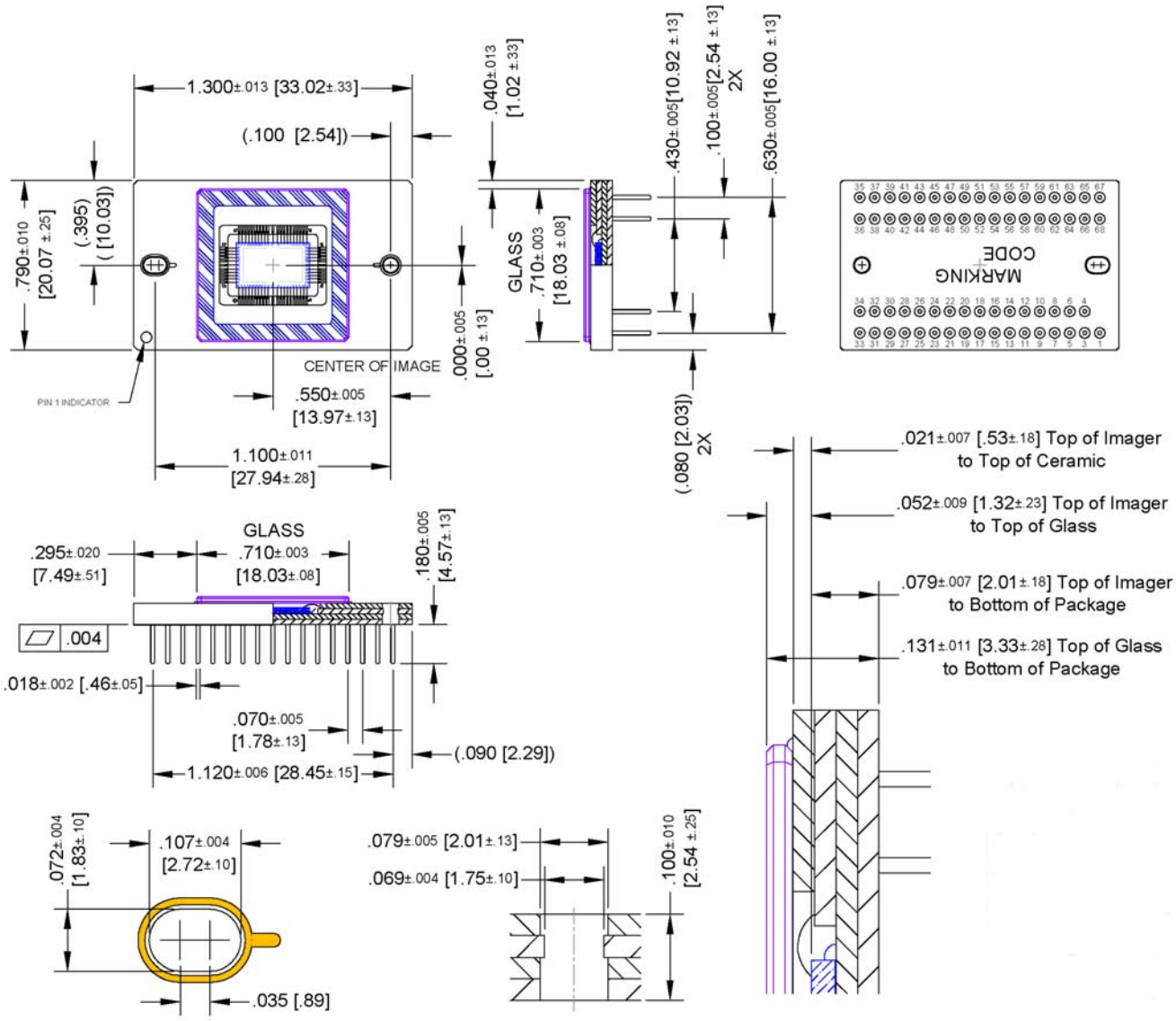

Notes:

1. See Ordering Information for marking code.
2. No materials to interfere with clearance through guide holes.
3. The center of the active image is nominally at the center of the package.
4. Die rotation < 0.5 degrees.
5. Glass rotation < 1.5 degrees
6. Internal traces may be exposed on sides of package. Do not allow metal to contact sides of ceramic package.
7. Recommended mounting screws:
   a.) 1.6 × 0.35 mm (ISO Standard)
   b.) 0–80 (Unified Fine Thread Standard).
8. Units: IN [MM]

Figure 29. PGA Completed Assembly

Downloaded from Arrow.com.

CLCC Completed Assembly

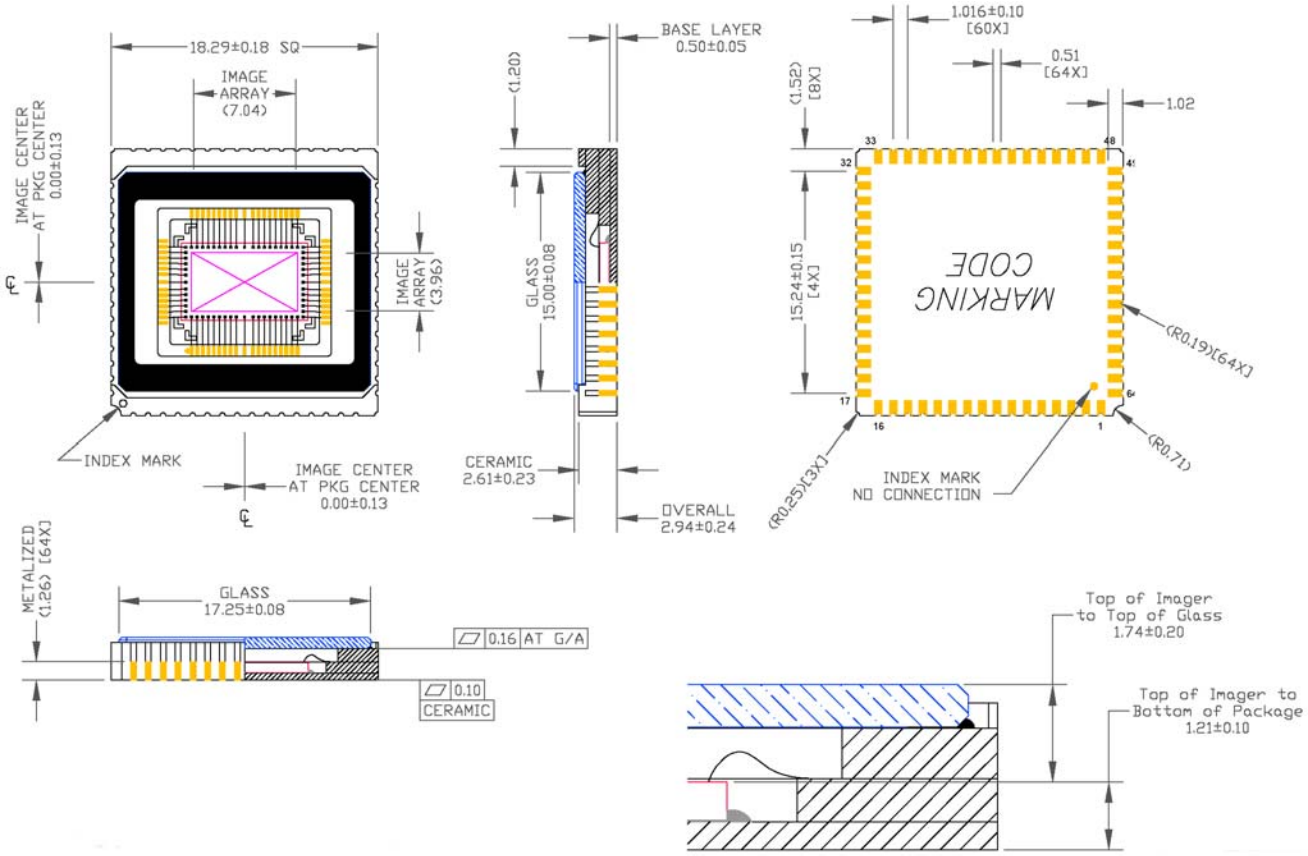

Notes:
1. See Ordering Information for marking code.
2. Die rotation < 0.5 degrees.
3. Units: millimeters.

Figure 30. CLCC Completed Assembly

Downloaded from Arrow.com.

PGA Cover Glass

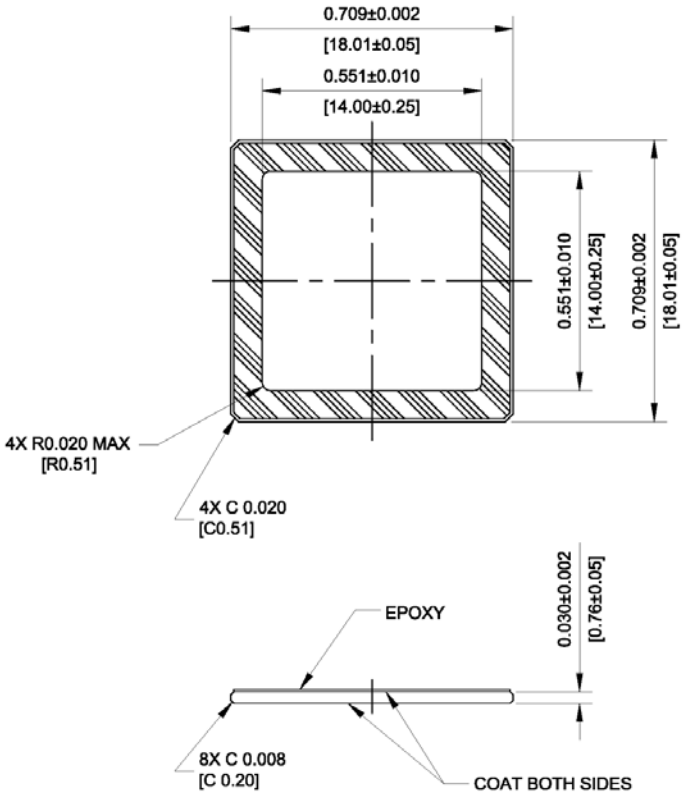

Notes:

1. Dust/Scratch Count – 12 micron maximum
2. Units: IN [MM]
3. Reflectance Specification
   a. 420 nm to 435 nm < 2.0%
   b. 435 nm to 630 nm < 0.8%
   c. 630 nm to 680 nm < 2.0%

Figure 31. PGA Cover Glass

Downloaded from Arrow.com.

CLCC Cover Glass

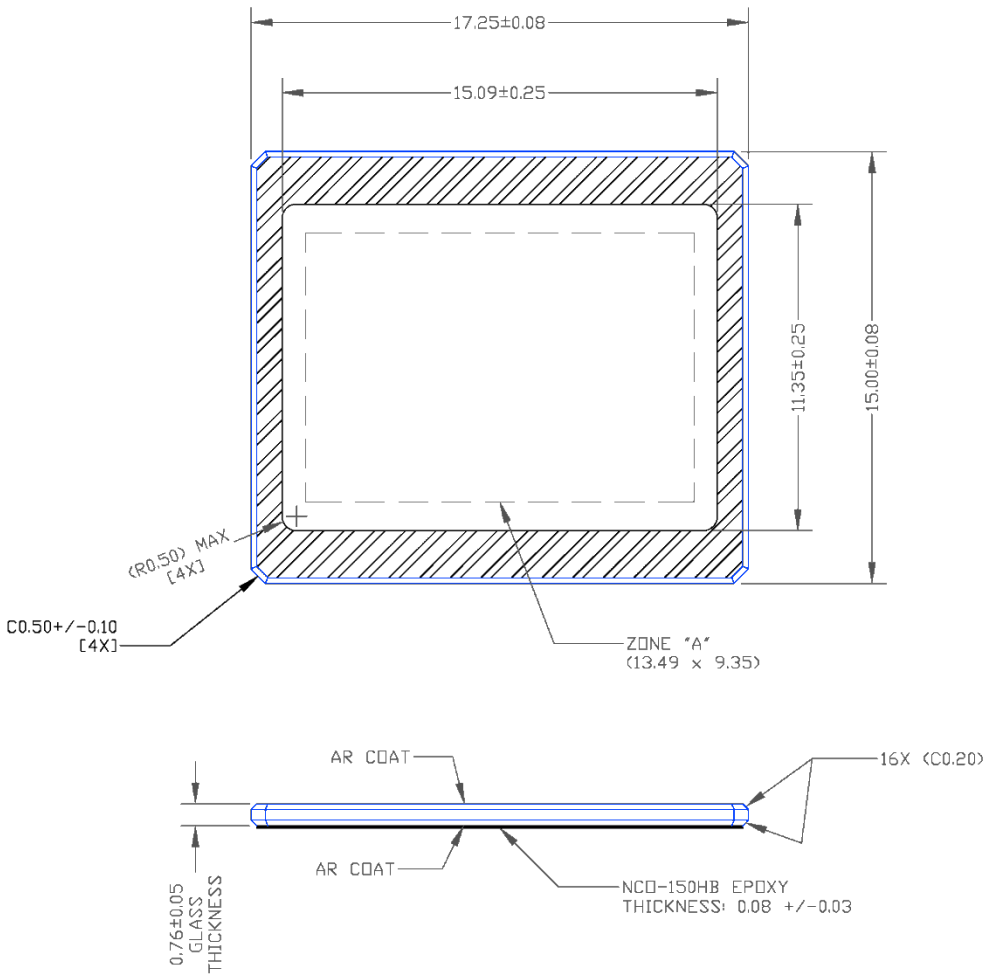

Notes:

1. Dust/Scratch Count – 12 micron maximum
2. Units: millimeter
3. Reflectance Specification
   a. 420 nm to 435 nm < 2.0%
   b. 435 nm to 630 nm < 0.8%
   c. 630 nm to 680 nm < 2.0%

Figure 32. CLCC Cover Glass

Downloaded from Arrow.com.

PGA Clear Cover Glass

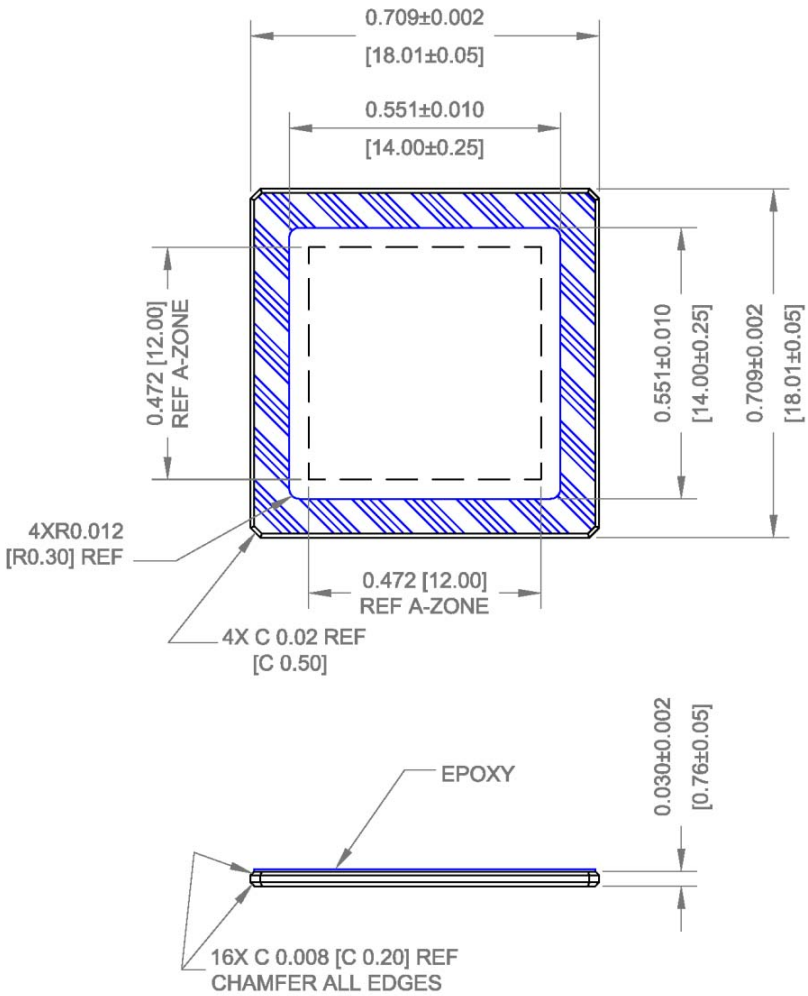

Notes:
1. Dust/Scratch Count – 12 micron maximum
2. Units: IN

Figure 33. PGA Clear Cover Glass

Downloaded from Arrow.com.

Cover Glass Transmission

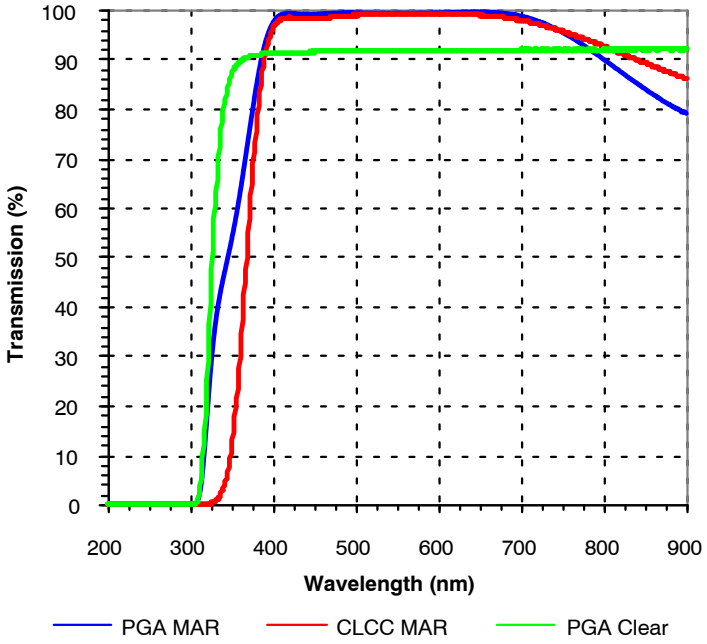

NOTE: PGA and CLCC MAR transmission data differ due to in-spec differences from glass vendor.

Figure 34. Cover Glass Transmission

ON Semiconductor and the ON are registered trademarks of Semiconductor Components Industries, LLC (SCILLC) or its subsidiaries in the United States and/or other countries. SCILLC owns the rights to a number of patents, trademarks, copyrights, trade secrets, and other intellectual property. A listing of SCILLC's product/patent coverage may be accessed at www.onsemi.com/site/pdf/Patent−Marking.pdf. SCILLC reserves the right to make changes without further notice to any products herein. SCILLC makes no warranty, representation or guarantee regarding the suitability of its products for any particular purpose, nor does SCILLC assume any liability arising out of the application or use of any product or circuit, and specifically disclaims any and all liability, including without limitation special, consequential or incidental damages. "Typical" parameters which may be provided in SCILLC data sheets and/or specifications can and do vary in different applications and actual performance may vary over time. All operating parameters, including "Typicals" must be validated for each customer application by customer's technical experts. SCILLC does not convey any license under its patent rights nor the rights of others. SCILLC products are not designed, intended, or authorized for use as components in systems intended for surgical implant into the body, or other applications intended to support or sustain life, or for any other application in which the failure of the SCILLC product could create a situation where personal injury or death may occur. Should Buyer purchase or use SCILLC products for any such unintended or unauthorized application, Buyer shall indemnify and hold SCILLC and its officers, employees, subsidiaries, affiliates, and distributors harmless against all claims, costs, damages, and expenses, and reasonable attorney fees arising out of, directly or indirectly, any claim of personal injury or death associated with such unintended or unauthorized use, even if such claim alleges that SCILLC was negligent regarding the design or manufacture of the part. SCILLC is an Equal Opportunity/Affirmative Action Employer. This literature is subject to all applicable copyright laws and is not for resale in any manner.

PUBLICATION ORDERING INFORMATION

LITERATURE FULFILLMENT:
Literature Distribution Center for ON Semiconductor
19521 E. 32nd Pkwy, Aurora, Colorado 80011 USA
Phone: 303−675−2175 or 800−344−3860 Toll Free USA/Canada
Fax: 303−675−2176 or 800−344−3867 Toll Free USA/Canada
Email: orderlit@onsemi.com

N. American Technical Support: 800−282−9855 Toll Free USA/Canada
Europe, Middle East and Africa Technical Support:
Phone: 421 33 790 2910
Japan Customer Focus Center
Phone: 81−3−5817−1050

ON Semiconductor Website: **www.onsemi.com**

Order Literature: http://www.onsemi.com/orderlit

For additional information, please contact your local Sales Representative

Downloaded from Arrow.com.