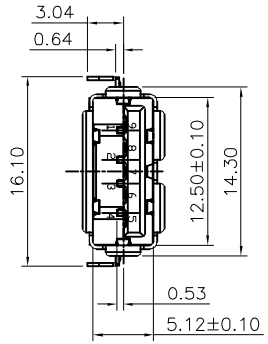

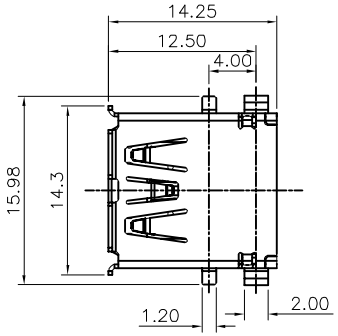

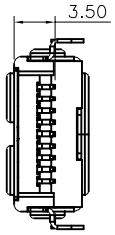

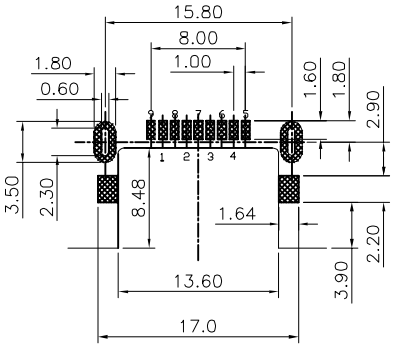

RECOMMENDED P.C.B LAYOUT
(TOLERANCE:±0.05)

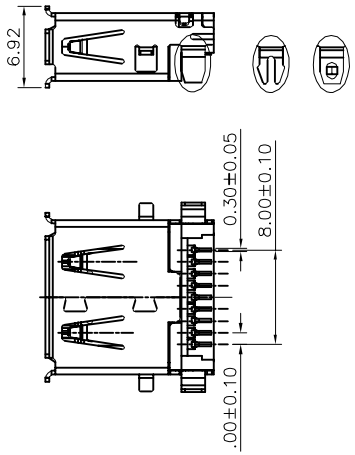

NOTES:

1.Material:
- 1.1 Housing: LCP+30%GF UL94V-0, Color Blue
- 1.2 Shell: Brass
- 1.3 Contact :Copper Alloy

2. FINISH:
- 2.1 Contact Area: Selective 15u"Au
  Solder Area:Tin Plated
  Under: Ni Plated

3.MECHANICAL:
- 3.1 Mating Force:3.57kgf Max.
- 3.2 Unmating Force:1.02kgf Min
- 3.3 Durability:5000 cycles

4.ELECTRICAL:
- 4.1 Current Rating:1.8A For PIN1 TO PIN4. 0.25A For other PIN
- 4.2 Dielectric Strength:100V AC FOR 1 MINUTE
- 4.3 Contact Resistance:30mΩ Max .For PIN1 TO PIN4
  50mΩ Max .For other PIN
- 4.4 Insulation Resistance:100 MΩ Min

5.Operating temperature: -55°C TO +85°C

6.PACKIING: Tape&Reel

RoHS compliant

Scale	Free					Date	Name	Customer-No.
TOLERANCE					Drawn	07.06.2013	Winnie	
.X	±0.30				Approved	31.10.2013	Winnie	ASSMANN WSW-No. AU-Y1006-3
.XX	±0.20							
.XXX	±0.10							Drawing-No. ASS 5775 CO rev01
DIM	TOL	①	Update the mating cycles	31.10.2013	Winnie			
X.°	±5°	⓪	Drawn	07.06.2013	Winnie			
Angle	TOL							Replace SHEET
UNIT	mm	Id.	Modification	Date	Name			

ASSMANN WSW components

Downloaded from Arrow.com.