MICRO SWITCH
FREEPORT, ILLINOIS, U.S.A.
A DIVISION OF HONEYWELL
FED. MFG. CODE 91929

SWITCH—ENCLOSED

CATALOG LISTING
BZE6-3YQT

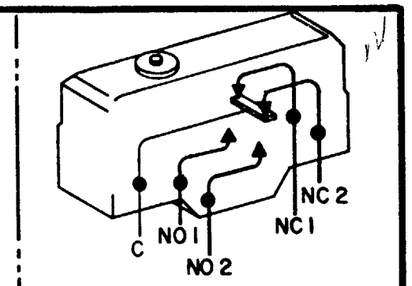

CIRCUIT DIAGRAM

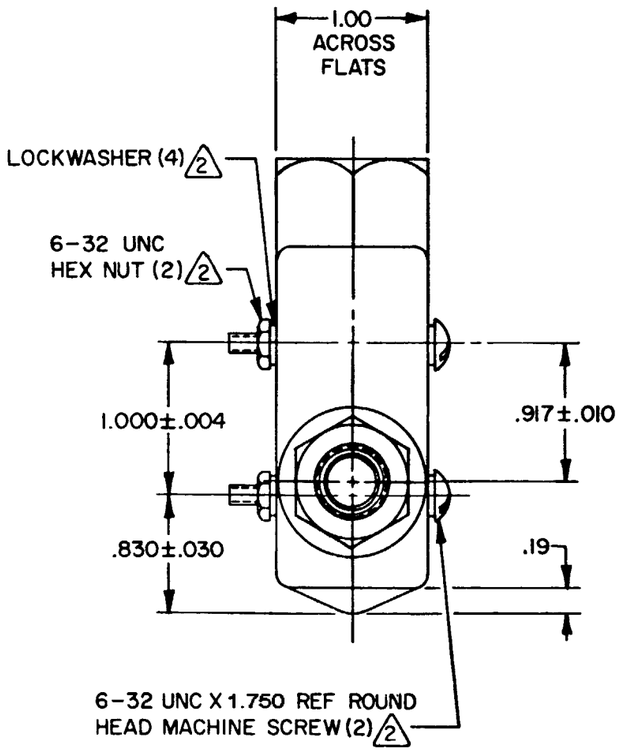

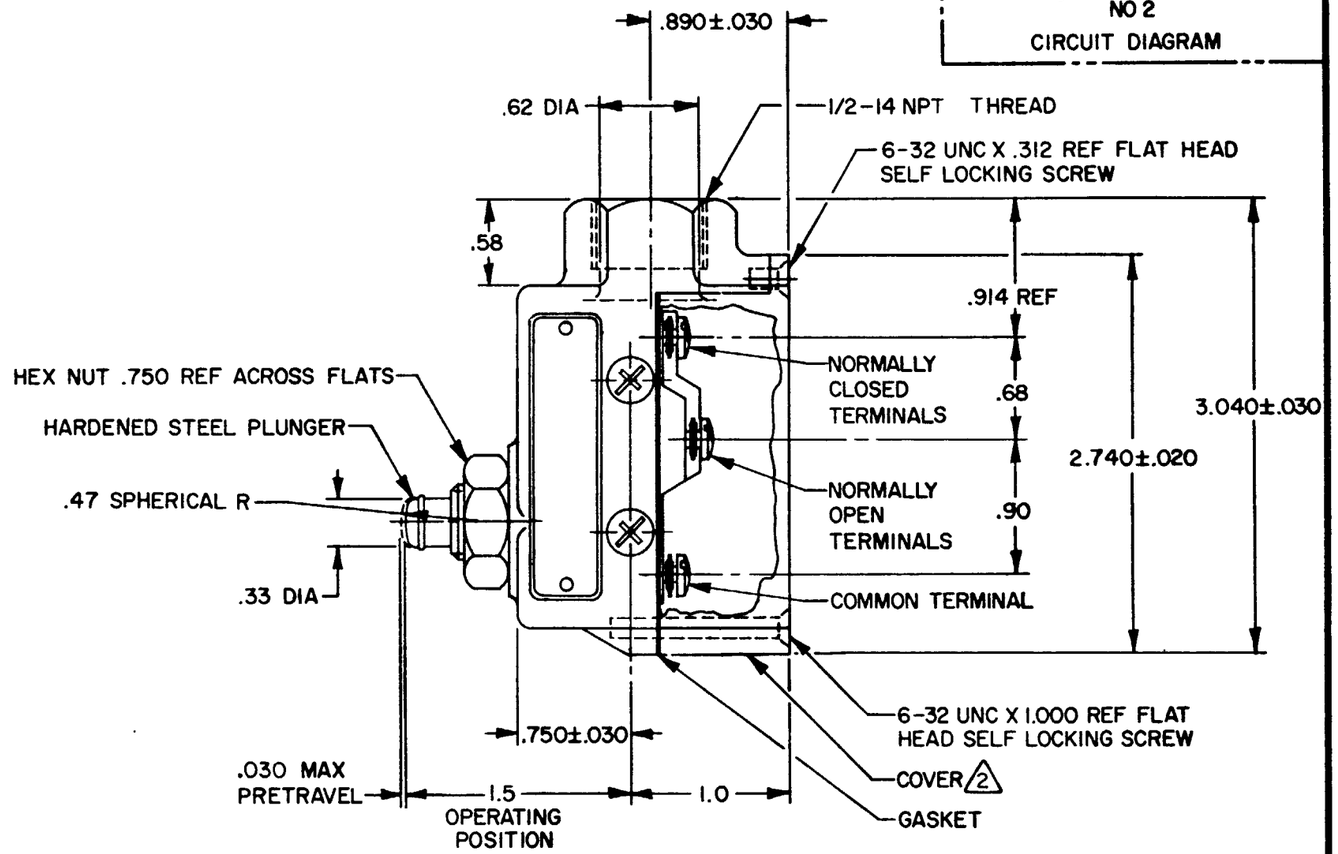

NOTES—

2 – 6-32 UNC X .219 REF BINDING HEAD TERMINAL SCREW AND WASHER (SEMS)(5) FURNISHED UNASSEMBLED
3 - SEAL RATING: NEMA 1
IP40

THIS DRAWING COVERS A PROPRIETARY ITEM AND IS THE PROPERTY OF MICRO SWITCH, A DIVISION OF HONEYWELL. THIS DRAWING IS NOT TO BE COPIED OR USED WITHOUT THE APPROVAL OF MICRO SWITCH.

CHARACTERISTICS	ELECTRICAL DATA	
OPERATING FORCE — — — — — — 16-26 OZ	CONTACT ARRANGEMENT S P D T SPLIT CONTACT	SCALE FULL DO NOT SCALE PRINT
RELEASE FORCE — — — — — — 4 OZ MIN		UNLESS OTHERWISE NOTED DIMENSIONS ARE IN INCHES
DIFFERENTIAL TRAVEL — — — .004 MAX OVERTRAVEL — — — — — — — — — .219 MIN BASIC SWITCH REPLACEMENT — — — BZ-3YQ66T	CODE L4 5A-250 VAC CE 1.5A, 240 Vac	TOLERANCES ARE: ONE PLACE (.0) ±.030 TWO PLACE (.00) ±.015 THREE PLACE (.000) ±.005 ANGLES ±1°
		WEIGHT .53 LB

BZE6-3YQT

ISSUE	DRAWING NUMBER	RELEASE NO.	REPLACES
8	M	29AUG07	

PSR 29AUG07 — CHECK — 2 SEP 77 — R OB — CHECK — 2 SEPT 77 — K P K — CHECK — 30 AUG 77 — J A L — DRAWN

REVISIONS

A	0038200	J A L 30 AUG 77
B	C053191-G	CJH 2 MAY 84
C	C055989	CJH 8 NOV 84
D	C054958	G J W 12 MAR 85
E	C072618	L J F 14 SEP 92
F	0016894	KRB 10 NOV 05
G	0033014	BS 29AUG07

RASTER FO-5285 1-A

Downloaded from Arrow.com.