Wireless LAN 802.11ax
+
Bluetooth® 5.4 (BR/EDR + Low Energy) Module

WKI611AA1

Data Sheet

By purchase of any products described in this document, the customer is deemed to understand and accept contents of this document.

The *Bluetooth*® word mark and logos are owned by the *Bluetooth* SIG, Inc. and any use of such marks by KAGA FEI Co., Ltd. is under license.

Copyright 2026 KAGA FEI Co., Ltd.

Downloaded from Arrow.com.

Note: This module requires a device driver that is subject to Japan's export control regulations. Depending on the customer's country or application (e.g., military use), we may not be able to provide the driver to all customers.

For more information or to contact your local sales office, please visit: *https://www.kagafei.com/jp/eng/*

Revision History

Date	Version No.	Description
2025/12/23	Ver. 1.0	Initial Release
2026/1/7	Ver. 1.1	Minor corrections
2026/1/16	Ver. 1.2	Revise WLAN TX Power
2026/2/4	Ver. 1.3	Correction of typos
2026/2/12	Ver. 1.4	Bluetooth DN correction

Copyright 2026 KAGA FEI Co., Ltd.

Downloaded from Arrow.com.

Table of Contents

1 General Information 4
1.1 Scope 4
1.2 Product Overview 4
2 Electrical Characteristics 7
2.1 Absolute Maximum Ratings 7
2.2 Recommended Operating Conditions 7
2.3 Power Consumption 8
2.4 DC Characteristics 8
2.5 AC Characteristics 9
2.5.1 Power on sequence 9
2.5.2 SDIO interface specifications 10
2.5.3 UART interface specifications 15
2.5.4 PCM interface specifications 16
2.6 RF Characteristics 18
2.6.1 WLAN 2.4GHz Band 18
2.6.2 WLAN 5GHz Band 20
2.6.3 Bluetooth® 23
2.6.4 Bluetooth® LE 23
3 Block Diagram 24
4 Mechanical Outline 25
4.1 Outline Dimensions 25
4.2 Shield Case Marking 26
4.3 Module Pad Dimensions 27
4.4 Recommended Land Pattern Dimensions 27
4.5 Recommended Solder Paste Stencil Dimensions 28
5 Pin Configuration 29
6 MAC Address Format 33
7 Handling Precautions 34
8 Packaging Specifications 36
9 Antenna Application Note 39
Other Precautions 43

Copyright 2026 KAGA FEI Co., Ltd.

Downloaded from Arrow.com.

1 General Information

1.1 Scope

This specification ("Specification") applies to the hybrid IC "WKI611AA1" for Wireless LAN and Bluetooth® ("Product") manufactured by KAGA FEI Co., Ltd. ("KAGA FEI").

1.2 Product Overview

① Part Number : WKI611AA1
Certified Model : WKI611
Please use the part number (WKI611AA1) when placing orders.

② Chipset : NXP IW611HN

③ Functionality : Wireless communication module
Wi-Fi 6 1x1 dual band 2.4GHz and 5GHz + Bluetooth® 5.4 (BR/EDR + Low Energy)

④ Wireless LAN Support : IEEE 802. 11a/b/g/n/ac/ax, 80MHz band width, up to MCS11 data rates

⑤ Bluetooth® Support : Bluetooth® 5.4 (BR/EDR + Low Energy), LE 2M, LE Coded
Design Number : Q370912

⑥ Interfaces : SDIO, UART, PCM, GPIOs

⑦ Operating Temperature Range: -40℃ to +85℃

⑧ RoHS Compliance : Compliant

⑨ Dimensions and Weight : 25.0 x 15.7 x 2.1 mm (Max), 1.25 g

⑩ Terminal / Mounting : 145-pin Land Grid Array (LGA), Surface-mount type

⑪ MSL : 3

⑫ Identification Numbers of Regulatory Certifications : Japan 005-103569
U.S.A. FCC ID: 2A6NFWKI611
Canada IC: 28568-WKI611

⑬ Packaging : Packaging Method: Tray
Quantity per Tray: 60 pcs
Standard Order Quantity: Multiples of 1200 pcs

⑭ Country of Origin : Thailand

Copyright 2026 KAGA FEI Co., Ltd.

Downloaded from Arrow.com.

⑮ Others :

1. Limitation of Warranty

ⅰ) KAGA FEI provide warranties only if the product is operated under the condition set forth in this specification. Please note that KAGA FEI shall not be liable for any defect and/or malfunction arising from use of the product under the terms and conditions other than the operating conditions hereof. In addition, when this product is used under environmental conditions such as over voltage which is not guaranteed, it may be destroyed in short mode. To ensure the security of customer's product, please add an extra fuse or/and a protection circuit for over voltage.

ⅱ) In some cases, KAGA FEI may use replacements as component parts of products. Such replacement shall apply only to component part of products, which KAGA FEI deems it possible to replace or substitute according to (i) scope of warranty provided in this specification (e.g. electric characteristics, outline, dimension, conditions of use, reliability tests, official standard (type approvals etc.)) and (ii) quality of products. KAGA FEI also ensures traceability of such replacement on production lot basis.

2. Instruction for Use (CAUTION)

ⅰ) Because product is not designed for radiation durability, please refrain from exposing product to radiation in the use.

ⅱ) Communication between this product and other might not be established nor maintained depending upon radio environment or operating condition of this product and other products with wireless technology.

ⅲ) This product operates in the unlicensed ISM band at 2.4GHz/5GHz. In case this product is used around the other wireless devices which operate in same frequency band of this product, there is a possibility that interference occurs between this product and such other devices. If such interference occurs, please stop the operation of other devices or relocate this product before using this product or do not use this product around the other wireless devices.

ⅳ) Regarding the use of 5GHz Wireless LAN with this product :
When used in Japan, W52 (5150-5250MHz) is for indoor use only, except for communication with registered radio stations. W53 (5250-5350MHz) is for indoor use only.
When used in Canada, W53 is for indoor use only.

3. Term of Support

ⅰ) In the case that customer requests KAGA FEI to customize the hardware of this Product in order to meet such customer's specific needs, KAGA FEI will make commercially reasonable effort to modify such hardware or software at customer's expense; provide however, the customer is kindly requested to agrees it doesn't mean that KAGA FEI has obligations to do so even in the case it is technically difficult for KAGA FEI.

ⅱ) Any failure arising out of this Product will be examined by KAGA FEI regardless of before or after mass production. Customer agrees that once such failure is turned out not to be responsible for KAGA FEI after aforesaid examination, some of the technical support shall be conducted by KAGA FEI at customer's expense; provided however, exact cost of this technical support can be agreed through the negotiation by the parties.

ⅲ) Do not alter hardware and/or software of this Product. Please note that KAGA FEI shall not be liable for any problem if it is caused by customer's alteration of Hardware without KAGA FEI 's prior approvals.

Copyright 2026 KAGA FEI Co., Ltd.

Downloaded from Arrow.com.

ⅳ) KAGA FEI does not guarantee functions and performances which depend on the customer's firmware. KAGA FEI does not assume liabilities for defects and failures.

4. Term of Warranty

KAGA FEI warrants only that this Product is in conformity with this Specification for one year after purchase and shall in no event give any other warranty.

5. Items of the Specification

Any question arising from the Specification shall be solved in good faith through mutual discussion by the parties hereof.

6. Caution for Export Control

ⅰ) This Product may be subject to governmental approvals, consents, licenses, authorizations, declarations, filings, and registrations for export or re-export as required by Japanese Foreign Exchange and Foreign Trade Law (including related laws and regulations) and/or any other country's applicable laws or regulations related to export control.

ⅱ) If this Product will be exported or re-exported, it is strongly recommended that customers check and confirm the necessary procedures to export or re-export this Product as required by applicable laws and regulations, and if necessary, customers must obtain the necessary and appropriate approvals or licenses from governmental authority at their own risk and expense.

Copyright 2026 KAGA FEI Co., Ltd.

Downloaded from Arrow.com.

2 Electrical Characteristics

2.1 Absolute Maximum Ratings

Item	Symbol	Rating		Unit	Remark
		Min.	Max.		
Supply voltage 1	AVDD33	–	3.96	V	
Supply voltage 2	AVDD18_1	–	2.16	V	
Supply voltage 3	AVDD18_2	–	2.16	V	
Supply voltage 4	VIO	–	2.16	V	
		–	3.96	V	
Supply voltage 5	VIO_SD	–	2.16	V	
		–	3.96	V	
Storage temperature range	Tstg	−40	85	Degrees C	

2.2 Recommended Operating Conditions

Item	Symbol	Rating			Unit	Remark
		Min.	Typ.	Max.		
Supply voltage 1	AVDD33	3.14	3.3	3.46	V	
Supply voltage 2	AVDD18_1	1.71	1.8	1.89	V	
Supply voltage 3	AVDD18_2	1.71	1.8	1.89	V	
Supply voltage 4	VIO	1.71	1.8	1.89	V	
		3.14	3.3	3.46	V	
Supply voltage 5	VIO_SD	1.71	1.8	1.89	V	
		3.14	3.3	3.46	V	
Operating temperature range	Topr	−40	25	85	Degrees C	

Copyright 2026 KAGA FEI Co., Ltd.

Downloaded from Arrow.com.

2.3 Power Consumption

The Specification applies for Topr.= 25 degrees C, Supply voltage=Typical voltage

No.	Parameter	Condition	Symbol	1.8V	3.3V	VIO (3.3V)	Unit	Remark
1	Peak Current	device initialization	Ip1	497	368	0.17	mA	
2	Tx Current1	2.4GHz 11b CCK-11	Itx1	143	209	0.17	mA	+17dBm
3	Tx Current2	2.4GHz 11ax HE40_MCS11	Itx2	153	139	0.17	mA	+12dBm
4	Tx Current3	5GHz 11a_54M	Itx3	219	217	0.17	mA	+14dBm
5	Tx Current4	5GHz 11ax HE80_MCS11	Itx4	230	153	0.17	mA	+9dBm
6	Tx Current5	Bluetooth® BR 1DH5	Itx5	393	0.1	0.22	mA	+17dBm
7	Tx Current6	Bluetooth® LE 1M	Itx6	394	0.1	0.22	mA	+17dBm
8	Rx Current1	2.4GHz 11ax HE40_MCS11	Irx1	161	0.1	0.17	mA	
9	Rx Current2	5GHz 11ax HE80_MCS11	Irx2	192	0.1	0.17	mA	
10	Rx Current3	Bluetooth® BR 1DH5	Irx3	137	0.1	0.22	mA	
11	Rx Current4	Bluetooth® LE Rx	Irx3	137	0.1	0.22	mA	
12	Sleep Current	Wi-Fi and Bluetooth® in deep sleep mode	Islp	0.41	0.02	0.12	mA	

2.4 DC Characteristics

Digital Pad Ratings (SDIO, PCM, GPIO) (VIO= 1.8 / 3.3V)

No.	Parameter	Condition	Symbol	Min.	Typ.	Max.	Unit	Remark
1	Input High Voltage	-	VIH	0.7xVIO	-	VIO+0.4	V	
2	Input Low Voltage	-	VIL	-0.4	-	0.3xVIO	V	
3	Output High Voltage	-	VOH	VIO-0.4	-	-	V	
4	Output Low Voltage	-	VOL	-	-	0.4	V	

Copyright 2026 KAGA FEI Co., Ltd.

Downloaded from Arrow.com.

2.5 AC Characteristics

2.5.1 Power on sequence

Power-on timing

	Parameter	Condition	Symbol	Min	Typ	Max	Unit	Remark
1	Valid power to PDn de-asserted(high)	-	T_{PU_RESET}	0	-	-	ms	
2	PDn asserted(low) to start of power-down	-	T_{RESET_PD}	0	-	-	ms	

<Power - on sequence>

PDN must remain asserted for minimum of T_{PU_RESET} after AVDD33/AVDD18_1,2/VIO/VIO_SD are stable.

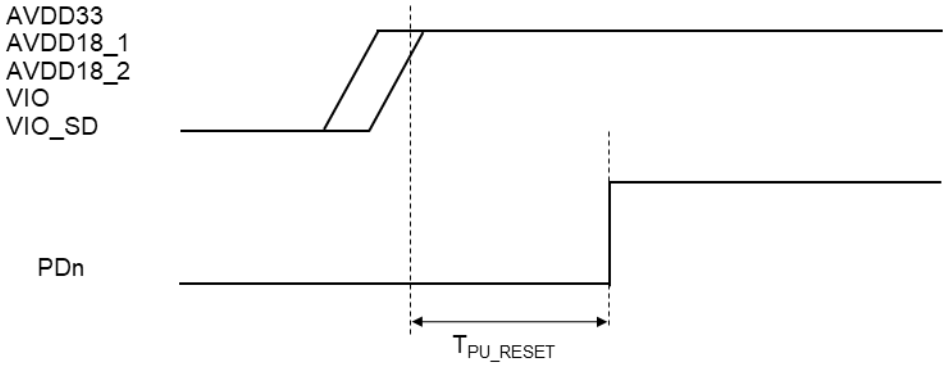

<Power - down sequence>

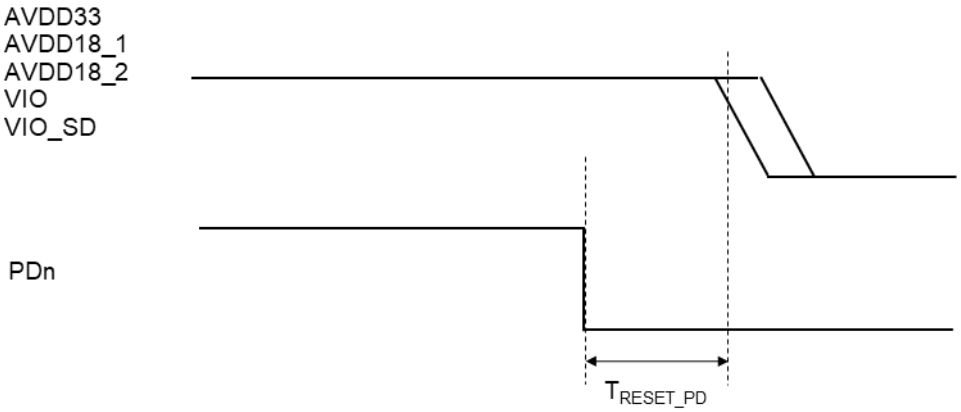

Copyright 2026 KAGA FEI Co., Ltd.

Downloaded from Arrow.com.

Power down (PDn)

	Parameter	Condition	Symbol	Min	Typ	Max	Unit	Remark
1	PDn pulse width	–	T_{PRW}	1	–	–	us	
2	From PDn de-asserted(high) to device ready (SDIO bus enumeration)	–	T_{INIT}	20	–	–	ms	
3	Input high voltage	–	V_{IH}	1.4	–	4.5	V	
4	Input low voltage	–	V_{IL}	-0.4	–	0.5	V	

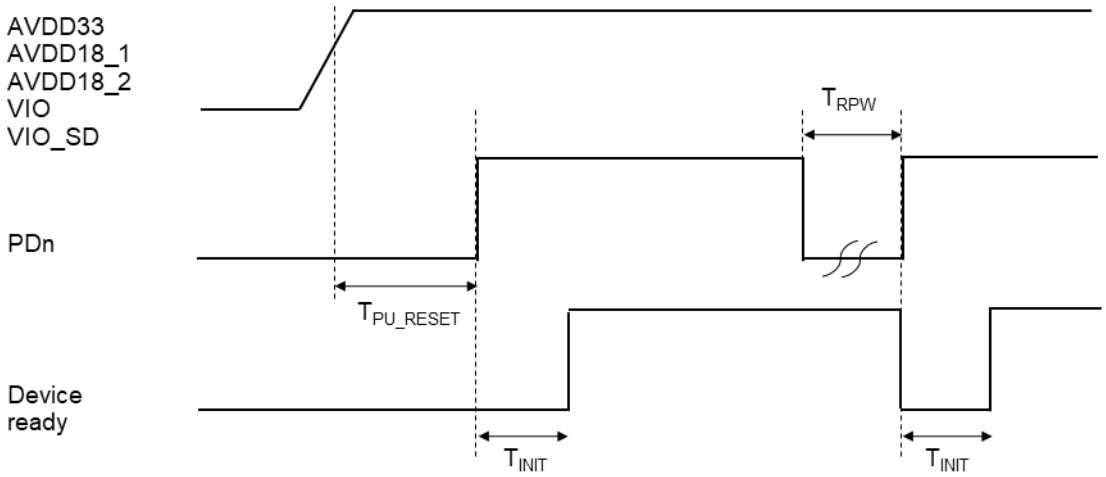

2.5.2 SDIO interface specifications

SDIO Internal pull-up/pull-down specifications

VIO_SD = 3.3V. The specification applies for Topr. = 25 degrees C.

Symbol	Parameter	Condition	Min	Typ	Max	Unit	Remark
Rsd_pud	Internal nominal pull-up/pull-down resistance	–	70	100	140	kΩ	

Copyright 2026 KAGA FEI Co., Ltd.

Downloaded from Arrow.com.

SDIO timing data – **Default-speed, High-speed mode**

VIO_SD = 3.3V. The specification applies for Topr. = 25 degrees C.

Symbol	Parameter	Condition	Min	Typ	Max	Unit	Remark
f_{PP}	Clock frequency	Default-speed	0	–	25	MHz	
		High-speed	0	–	50	MHz	
T_{WL}	Clock low time	Default-speed	10	–	–	ns	
		High-speed	7	–	–	ns	
T_{WH}	Clock high time	Default-speed	10	–	–	ns	
		High-speed	7	–	–	ns	
T_{ISU}	Input setup time	Default-speed	5	–	–	ns	
		High-speed	6	–	–	ns	
T_{IH}	Input hold time	Default-speed	5	–	–	ns	
		High-speed	2	–	–	ns	
T_{ODLY}	Output delay time CL ≤ 40 pF (1card)	Default-speed	–	–	14	ns	
		High-speed	–	–	14	ns	
T_{OH}	Output hold time	High-speed	2.5	–	–	ns	

SDIO protocol timing diagram – **Default-speed mode**

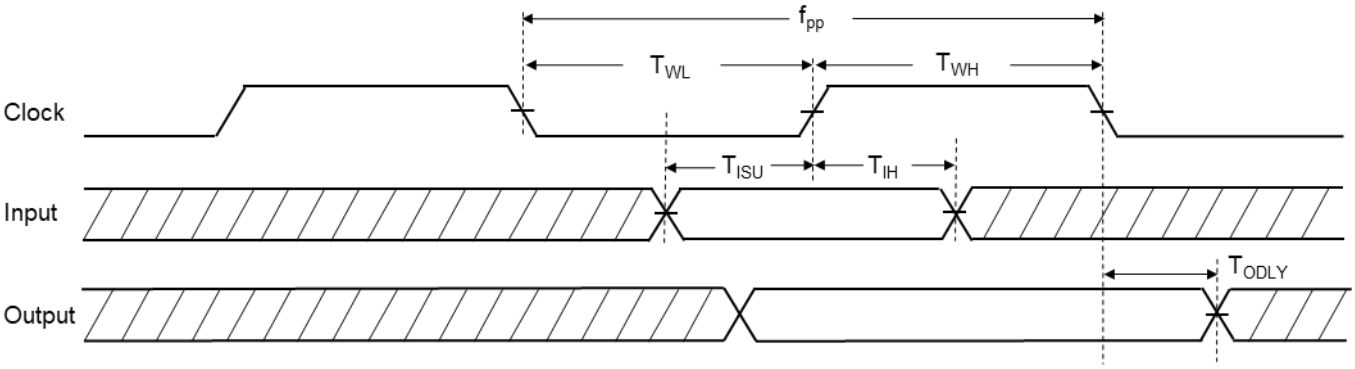

SDIO protocol timing diagram – **High-speed mode**

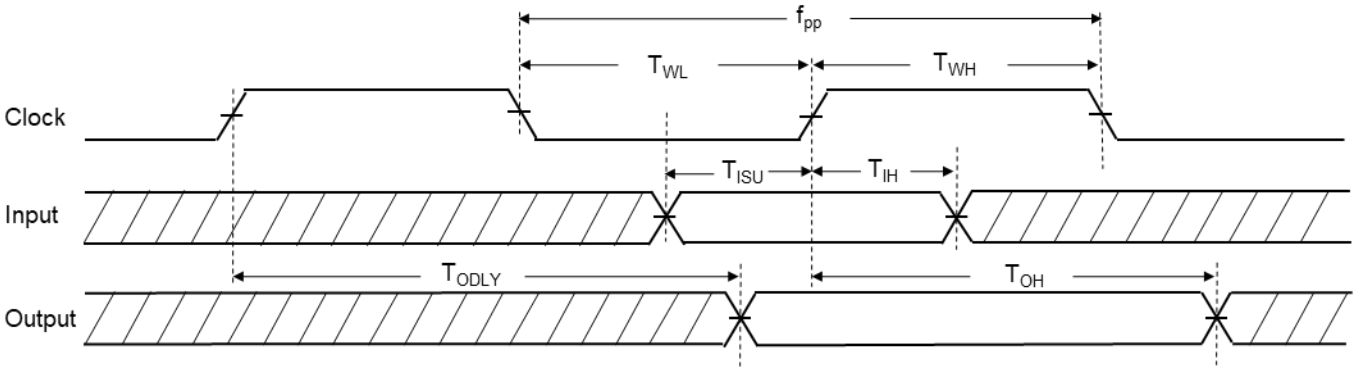

Copyright 2026 KAGA FEI Co., Ltd.

Downloaded from Arrow.com.

SDIO timing data – **SDR12, SDR25, SDR50 modes (up to 100MHz) (1.8V)**

VIO_SD = 1.8V. The specification applies for Topr. = 25 degrees C.

Symbol	Parameter	Condition	Min	Typ	Max	Unit	Remark
f_{PP}	Clock frequency	SDR12	0	–	25	MHz	
		SDR25	0	–	50	MHz	
		SDR50	0		100	MHz	
T_{IS}	Input setup time	SDR12	3	–	–	ns	
		SDR25	3	–	–	ns	
		SDR50	3	–	–	ns	
T_{IH}	Input hold time	SDR12	0.8	–	–	ns	
		SDR25	0.8	–	–	ns	
		SDR50	0.8	–	–	ns	
T_{CLK}	Clock time	SDR12	40	–	40	ns	
		SDR25	10	–	20	ns	
		SDR50	10	–	10	ns	
T_{CR}, T_{CF}	Rise time, fall time T_{CR}, T_{CF} < 2ns (max) at 100MHz C_{CARD} = 10pF	SDR12	–	–	$0.2*T_{CLK}$	ns	
		SDR25	–	–	$0.2*T_{CLK}$	ns	
		SDR50	–	–	$0.2*T_{CLK}$	ns	
T_{ODLY}	Output delay time $C_L \leq 30$ pF	SDR12	–	–	14	ns	
		SDR25	–	–	14	ns	
		SDR50		–	7.5	ns	
T_{OH}	Output hold time C_L = 15pF	SDR25	1.5	–	–	ns	
		SDR50	1.5	–	–	ns	
		SDR25	1.5	–	–	ns	

SDIO protocol timing diagram – **SDR12, SDR25, SDR50 modes (up to 100MHz) (1.8V)**

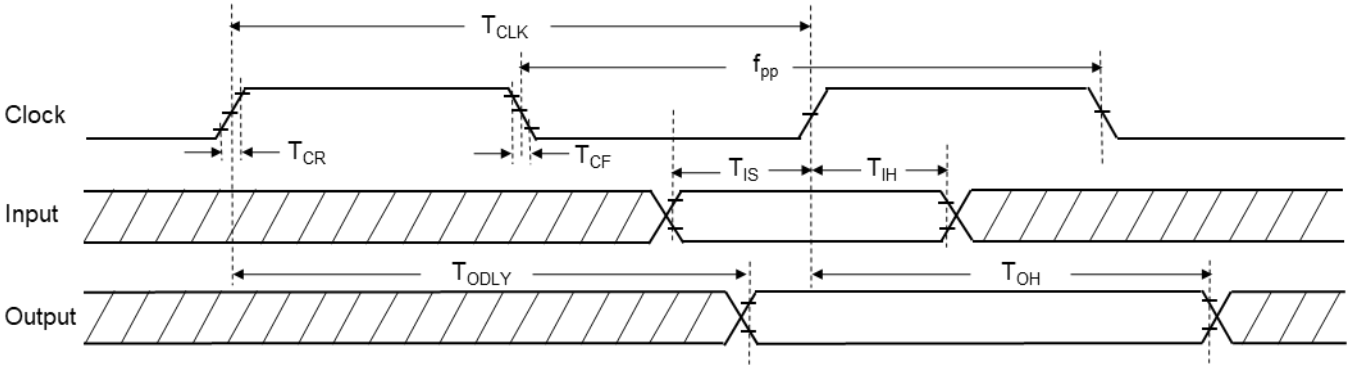

Copyright 2026 KAGA FEI Co., Ltd.

Downloaded from Arrow.com.

SDIO timing data – **SDR104 mode (up to 208MHz) (1.8V)**

VIO_SD = 1.8V. The specification applies for Topr. = 25 degrees C.

Symbol	Parameter	Condition	Min	Typ	Max	Unit	Remark
f_{PP}	Clock frequency	SDR104	0	–	208	MHz	
T_{IS}	Input setup time	SDR104	1.4	–	–	ns	
T_{IH}	Input hold time	SDR104	0.8	–	–	ns	
T_{CLK}	Clock time	SDR104	4.8	–	–	ns	
T_{CR}, T_{CF}	Rise time, fall time T_{CR}, T_{CF} < 0.96ns (max) at 208MHz C_{CARD} = 10pF	SDR104	–	–	0.2*T_{CLK}	ns	
T_{OP}	Card output phase	SDR104	0	–	2	ns	
T_{ODW}	Output timing of variable data window	SDR104	2.88	–	–	ns	

SDIO protocol timing diagram – **SDR104 mode (up to 208MHz) (1.8V)**

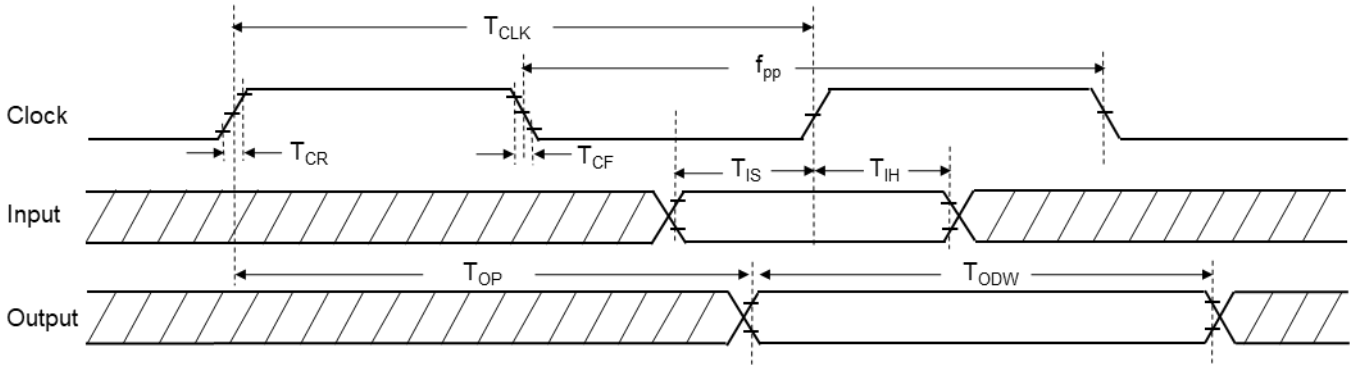

Copyright 2026 KAGA FEI Co., Ltd.

Downloaded from Arrow.com.

SDIO timing data – **DDR50 mode (50MHz) (1.8V)**

VIO_SD = 1.8V. The specification applies for Topr. = 25 degrees C.

Symbol	Parameter	Condition	Min	Typ	Max	Unit	Remark
Clock							
T_{CLK}	Clock time 50 MHz (max) between rising edges	DDR50	20	–	–	ns	
T_{CR}, T_{CF}	Rise time, fall time T_{CR}, T_{CF} < 4.00ns (max) at 50MHz C_{CARD} = 10pF	DDR50	–	–	0.2*T_{CLK}	ns	
Clock Duty	–	DDR50	45	–	55	%	
CMD Input (referenced to clock rising edge)							
T_{IS}	Input setup time C_{CARD} ≤ 10pF (1 card)	DDR50	6	–	–	ns	
T_{IH}	Input hold time C_{CARD} ≤ 10pF (1 card)	DDR50	0.8	–	–	ns	
CMD Output (referenced to clock rising edge)							
T_{ODLY}	Output delay time during data transfer mode C_L ≤ 30pF (1 card)	DDR50	–	–	13.7	ns	
T_{OHLD}	Output hold time C_L ≥ 15pF (1 card)	DDR50	1.5	–	–	ns	
DAT[3:0] Input (referenced to clock rising and falling edge)							
T_{IS2X}	Input setup time C_{CARD} ≤ 10pF (1 card)	DDR50	3	–	–	ns	
T_{IH2X}	Input hold time C_{CARD} ≤ 10pF (1 card)	DDR50	0.8	–	–	ns	
DAT[3:0] Output (referenced to clock rising and falling edge)							
$T_{ODLY2X\ (max)}$	Output delay time during data transfer mode C_L ≤ 25pF (1 card)	DDR50	–	–	7.0	ns	
$T_{OHLD2X\ (max)}$	Output hold time C_L ≥ 15pF (1 card)	DDR50	1.5	–		ns	

Copyright 2026 KAGA FEI Co., Ltd.

Downloaded from Arrow.com.

SDIO CMD timing diagram – **DDR50 mode (50MHz) (1.8V)**

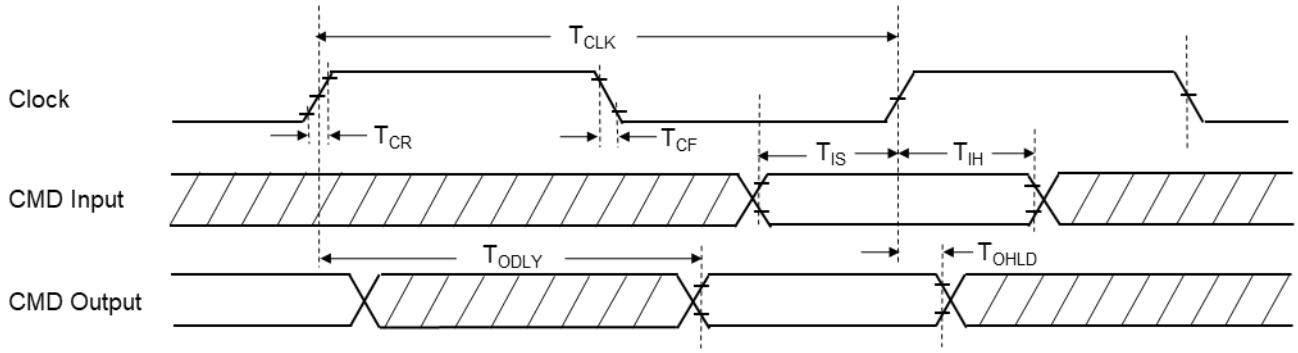

SDIO DAT[3:0] timing diagram – **DDR50 mode (50MHz) (1.8V)**

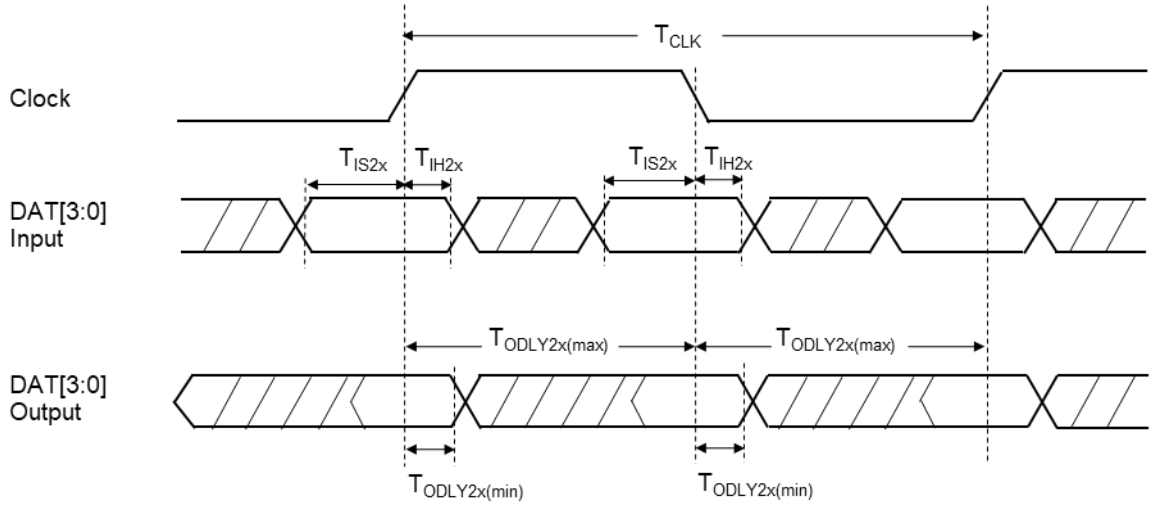

Note)
In DDR50 mode, DAT[3:0] lines are sampled on both edges of the clock (not applicable for CMD line).

2.5.3 UART interface specifications

The default baud rate after reset is 115.2kbps.

Symbol	Parameter	Condition	Min	Typ	Max	Unit	Remark
T_{BAUD}	Baud time	40MHz clock input	250	–	–	ns	

The acceptable deviation from the UART Rx target baud rate is ±3%.

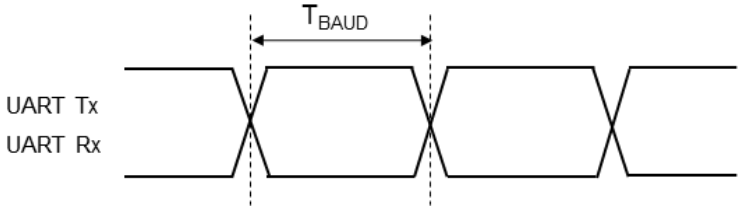

Copyright 2026 KAGA FEI Co., Ltd.

Downloaded from Arrow.com.

2.5.4 PCM interface specifications

PCM timing specification data – **Central mode**

VIO = 3.3V/1.8V. The specification applies for Topr. = 25 degrees C.

Symbol	Parameter	Condition	Min	Typ	Max	Unit	Remark
f_{BCLK}	Bit clock frequency	–	2	2/2.048	2.048	MHz	
Duty $Cycle_{BCLK}$	Bit clock duty cycle	–	0.4	0.5	0.6	–	
$T_{BCLK\ rise/fall}$	PCM_CLK rise/fall time	–	–	3	–	ns	
T_{DO}	Delay from PCM_CLK rising edge to PCM_DOUT rising edge	–	–	–	15	ns	
T_{DISU}	Setup time for PCM_DIN before PCM_CLK falling edge	–	20	–	–	ns	
T_{DIHO}	Hold time for PCM_DIN after PCM_CLK falling edge	–	15	–	–	ns	
T_{BF}	Delay from PCM_CLK rising edge to PCM_SYNC rising edge	–	–	–	15	ns	

PCM timing specification for data signals – **Central mode**

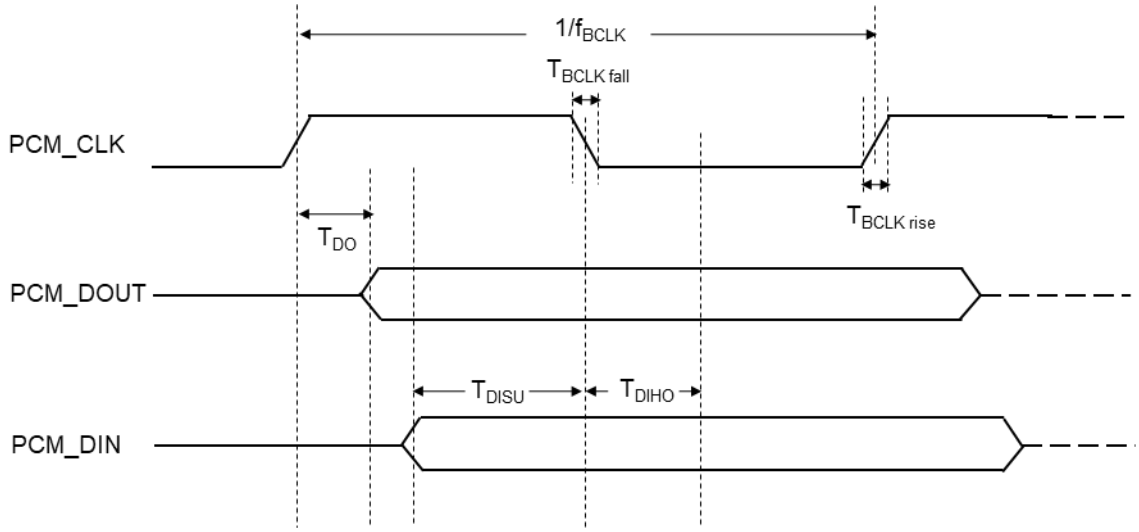

PCM timing specification for PCM_SYNC signals – **Central mode**

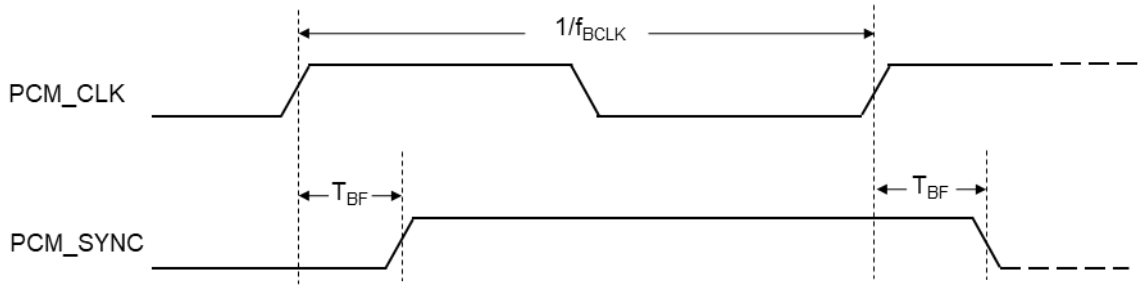

Copyright 2026 KAGA FEI Co., Ltd.

Downloaded from Arrow.com.

PCM timing specification data – **Peripheral mode**

VIO = 3.3V/1.8V. The specification applies for Topr. = 25 degrees C.

Symbol	Parameter	Condition	Min	Typ	Max	Unit	Remark
f_{BCLK}	Bit clock frequency	–	0.512	2/2.048	4	MHz	*1
Duty $Cycle_{BCLK}$	Bit clock duty cycle	–	0.4	0.5	0.6	–	
$T_{BCLK\ rise/fail}$	PCM_CLK rise/fall time	–	–	3	–	ns	
T_{DO}	Delay from PCM_CLK rising edge to PCM_DOUT rising edge	–	–	–	30	ns	
T_{DISU}	Setup time for PCM_DIN before PCM_CLK falling edge	–	15	–	–	ns	
T_{DIHO}	Hold time for PCM_DIN after PCM_CLK falling edge	–	10	–	–	ns	
T_{BFSU}	Setup time for PCM_SYNC before PCM_CLK falling edge	–	15	–	–	ns	
T_{BFHO}	Hold time for PCM_SYNC before PCM_CLK falling edge	–	10	–	–	ns	

*1. For applications that support dual-WBS (Wide Band Speech) capabilities over Bluetooth, a minimum PCM clock rate of 1.024 MHz is required due to bandwidth considerations. A single-WBS link or dual-NBS link configuration can be supported using a 0.512 MHz PCM clock rate.

PCM timing specification for data signals – **Peripheral mode**

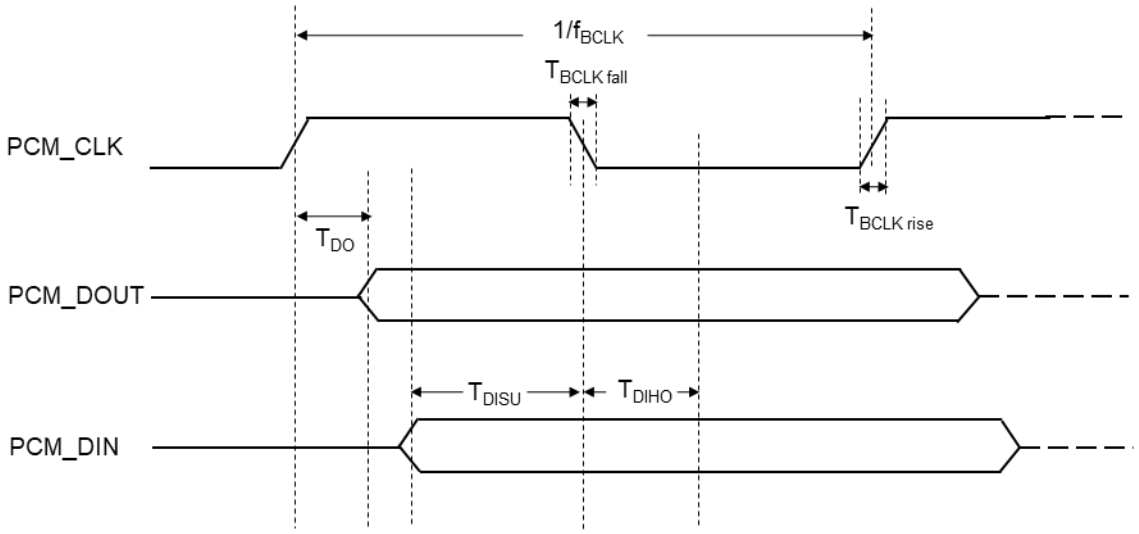

PCM timing specification for PCM_SYNC signals – **Peripheral mode**

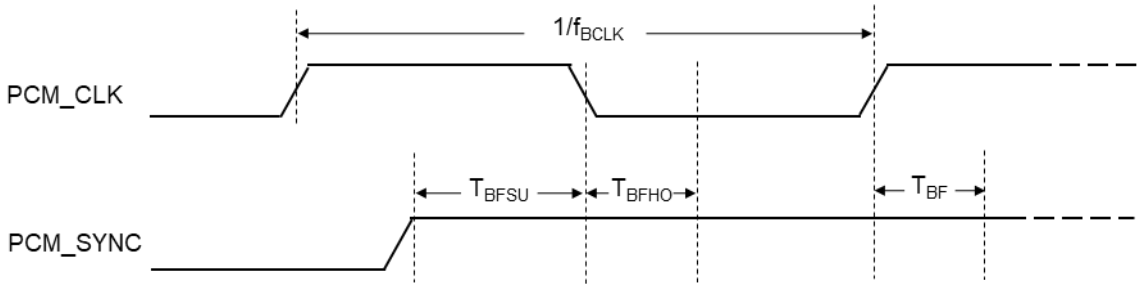

Copyright 2026 KAGA FEI Co., Ltd.

Downloaded from Arrow.com.

2.6 RF Characteristics

2.6.1 WLAN 2.4GHz Band

The Specification applies for Topr.= 25 degrees C, Supply voltage=Typical voltage

Parameter	Condition	Min	Typ	Max	Unit	Remark
RF frequency range		2412	–	2472	MHz	
Supported Bandwidth		20	–	40	MHz	
Transmit Frequency Error		-20	–	20	ppm	

2.6.1.1 WLAN 2.4GHz 802.11b

The Specification applies for Topr.= 25 degrees C, Supply voltage=Typical voltage

No	Parameter	Condition	Min	Typ	Max	Unit	Remark
1	Tx Power		–	17	–	dBm	Tolerance :±2dB
2	Spectrum MASK	1st Side Lobe	–	–	-30	dBc	
		2nd Side Lobe	–	–	-50	dBc	
3	EVM	11Mbps Peak	–	–	35	%	
4	Rx sensitivity	11Mbps	–	-88.7	–	dBm	
5	Rx Maximum Input Level	–	–	-3	–	dBm	

2.6.1.2 WLAN 2.4GHz 802.11g

The Specification applies for Topr.= 25 degrees C, Supply voltage=Typical voltage

No	Parameter	Condition	Min	Typ	Max	Unit	Remark
1	Tx Power		–	15	–	dBm	Tolerance :±2dB
2	Spectrum MASK	1st Side Lobe	–	–	-20	dBc	
		2nd Side Lobe	–	–	-28	dBc	
		3rd Side Lobe	–	–	-40	dBc	
3	EVM	54Mbps	–	–	-25	dB	
4	Rx sensitivity	54Mbps	–	-75.1	–	dBm	
5	Rx Maximum Input Level	–	–	-13	–	dBm	

2.6.1.3 WLAN 2.4GHz 802.11n (HT20)

The Specification applies for Topr.= 25 degrees C, Supply voltage=Typical voltage

No	Parameter	Condition	Min	Typ	Max	Unit	Remark
1	Tx Power	MCS0-MCS7	–	15	–	dBm	Tolerance :±2dB
2	Spectrum MASK	1st Side Lobe	–	–	-20	dBc	
		2nd Side Lobe	–	–	-28	dBc	
		3rd Side Lobe	–	–	-45	dBc	
3	EVM	MCS7	–	–	-27	dB	
4	Rx sensitivity I	MCS7	–	-72.4	–	dBm	
5	Rx Maximum Input Level	–	–	-13	–	dBm	

Copyright 2026 KAGA FEI Co., Ltd.

Downloaded from Arrow.com.

2.6.1.4 WLAN 2.4GHz 802.11n (HT40)

The Specification applies for Topr.= 25 degrees C, Supply voltage=Typical voltage

No	Parameter	Condition	Min	Typ	Max	Unit	Remark
1	Tx Power	MCS0-MCS7	-	13	-	dBm	Tolerance :±2dB
2	Spectrum MASK	1st Side Lobe	-	-	-20	dBc	
		2nd Side Lobe	-	-	-28	dBc	
		3rd Side Lobe	-	-	-45	dBc	
3	EVM	MCS7	-	-	-27	dB	
4	Rx sensitivity	MCS7	-	-69.5	-	dBm	
5	Rx Maximum Input Level	-	-	-13	-	dBm	

2.6.1.5 WLAN 2.4GHz 802.11ax (HE20)

The Specification applies for Topr.= 25 degrees C, Supply voltage=Typical voltage

No	Parameter	Condition	Min	Typ	Max	Unit	Remark
1	Tx Power	MCS0-MCS7	-	15	-	dBm	Tolerance :±2dB
		MCS8-MCS11	-	12	-	dBm	
2	Spectrum MASK	1st Side Lobe	-	-	-20	dBc	
		2nd Side Lobe	-	-	-28	dBc	
		3rd Side Lobe	-	-	-45	dBc	
3	EVM	MCS11	-	-	-35	dB	
4	Rx sensitivity	MCS11	-	-62.8	-	dBm	
5	Rx Maximum Input Level	-	-	-13	-	dBm	

2.6.1.6 WLAN 2.4GHz 802.11ax (HE40)

The Specification applies for Topr.= 25 degrees C, Supply voltage=Typical voltage

No	Parameter	Condition	Min	Typ	Max	Unit	Remark
1	Tx Power	MCS0-MCS9	-	13	-	dBm	Tolerance :±2dB
		MCS10-MCS11	-	12	-	dBm	
2	Spectrum MASK	1st Side Lobe	-	-	-20	dBc	
		2nd Side Lobe	-	-	-28	dBc	
		3rd Side Lobe	-	-	-45	dBc	
3	EVM	MCS11	-	-	-35	dB	
4	Rx sensitivity	MCS11	-	-60.3	-	dBm	
5	Rx Maximum Input Level	-	-	-13	-	dBm	

Copyright 2026 KAGA FEI Co., Ltd.

Downloaded from Arrow.com.

2.6.2 WLAN 5GHz Band

The Specification applies for Topr.= 25 degrees C, Supply voltage=Typical voltage

Parameter	Condition	Min	Typ	Max	Unit	Remark
RF frequency range		5180	–	5825	MHz	
Supported Bandwidth		20	–	80	MHz	
Transmit Frequency Error		−20	–	20	ppm	

2.6.2.1 WLAN 5GHz 802.11a

The Specification applies for Topr.= 25 degrees C, Supply voltage=Typical voltage

No	Parameter	Condition	Min	Typ	Max	Unit	Remark
1	Tx Power		–	14	–	dBm	Tolerance :±2dB
2	Spectrum MASK	1st Side Lobe	–	–	−20	dBc	
		2nd Side Lobe	–	–	−28	dBc	
		3rd Side Lobe	–	–	−40	dBc	
3	EVM	54Mbps	–	–	−25	dB	
4	Rx sensitivity	54Mbps	–	−75.0	–	dBm	
5	Rx Maximum Input Level	54Mbps	–	−6	–	dBm	

2.6.2.2 WLAN 5GHz 802.11n (HT20)

The Specification applies for Topr.= 25 degrees C, Supply voltage=Typical voltage

No	Parameter	Condition	Min	Typ	Max	Unit	Remark
1	Tx Power	MCS0-MCS7	–	14	–	dBm	Tolerance :±2dB
2	Spectrum MASK	1st Side Lobe	–	–	−20	dBc	
		2nd Side Lobe	–	–	−28	dBc	
		3rd Side Lobe	–	–	−45	dBc	
3	EVM	MCS7	–	–	−27	dB	
4	Rx sensitivity	MCS7	–	−72.2	–	dBm	
5	Rx Maximum Input Level	MCS7	–	−7	–	dBm	

2.6.2.3 WLAN 5GHz 802.11n (HT40)

The Specification applies for Topr.= 25 degrees C, Supply voltage=Typical voltage

No	Parameter	Condition	Min	Typ	Max	Unit	Remark
1	Tx Power	MCS0-MCS7	–	13	–	dBm	Tolerance :±2dB
2	Spectrum MASK	1st Side Lobe	–	–	−20	dBc	
		2nd Side Lobe	–	–	−28	dBc	
		3rd Side Lobe	–	–	−45	dBc	
3	EVM	MCS7	–	–	−27	dB	
4	Rx sensitivity	MCS7	–	−69.8	–	dBm	
5	Rx Maximum Input Level	MCS7	–	−6	–	dBm	

Copyright 2026 KAGA FEI Co., Ltd.

Downloaded from Arrow.com.

2.6.2.4 WLAN 5GHz 802.11ac (VHT20)

The Specification applies for Topr.= 25 degrees C, Supply voltage=Typical voltage

No	Parameter	Condition	Min	Typ	Max	Unit	Remark
1	Tx Power	MCS0-MCS7	-	14	-	dBm	Tolerance :±2dB
		MCS8	-	12	-	dBm	
2	Spectrum MASK	1st Side Lobe	-	-	-20	dBc	
		2nd Side Lobe	-	-	-28	dBc	
		3rd Side Lobe	-	-	-45	dBc	
3	EVM	MCS8	-	-	-30	dB	
4	Rx sensitivity	MCS8	-	-69.0	-	dBm	
5	Rx Maximum Input Level	MCS8	-	-8	-	dBm	

2.6.2.5 WLAN 5GHz 802.11ac (VHT40)

The Specification applies for Topr.= 25 degrees C, Supply voltage=Typical voltage

No	Parameter	Condition	Min	Typ	Max	Unit	Remark
1	Tx Power	MCS0-MCS4	-	13	-	dBm	Tolerance :±2dB
		MCS5-MCS7	-	13	-	dBm	
		MCS8-MCS9	-	12	-	dBm	
2	Spectrum MASK	1st Side Lobe	-	-	-20	dBc	
		2nd Side Lobe	-	-	-28	dBc	
		3rd Side Lobe	-	-	-45	dBc	
3	EVM	MCS9	-	-	-32	dB	
4	Rx sensitivity	MCS9	-	-64.6	-	dBm	
5	Rx Maximum Input Level	MCS9	-	-9	-	dBm	

2.6.2.6 WLAN 5GHz 802.11ac (VHT80)

The Specification applies for Topr.= 25 degrees C, Supply voltage=Typical voltage

No	Parameter	Condition	Min	Typ	Max	Unit	Remark
1	Tx Power	MCS0-MCS4	-	12	-	dBm	Tolerance :±2dB
		MCS5-MCS7	-	12	-	dBm	
		MCS8-MCS9	-	12	-	dBm	
2	Spectrum MASK	1st Side Lobe	-	-	-20	dBc	
		2nd Side Lobe	-	-	-28	dBc	
		3rd Side Lobe	-	-	-40	dBc	
3	EVM	MCS9	-	-	-32	dB	
4	Rx sensitivity	MCS9	-	-61.4	-	dBm	
5	Rx Maximum Input Level	MCS9	-	-8	-	dBm	

Copyright 2026 KAGA FEI Co., Ltd.

Downloaded from Arrow.com.

2.6.2.7 WLAN 5GHz 802.11ax (HE20)

The Specification applies for Topr.= 25 degrees C, Supply voltage=Typical voltage

No	Parameter	Condition	Min	Typ	Max	Unit	Remark
1	Tx Power	MCS0-MCS4	-	14	-	dBm	Tolerance :±2dB
		MCS5-MCS7	-	14	-	dBm	
		MCS8-MCS9	-	12	-	dBm	
		MCS10-MCS11	-	11	-	dBm	
2	Spectrum MASK	1st Side Lobe	-	-	-20	dBc	
		2nd Side Lobe	-	-	-28	dBc	
		3rd Side Lobe	-	-	-45	dBc	
3	EVM	MCS11	-	-	-35	dB	
4	Rx sensitivity	MCS11	-	-62.7	-	dBm	
5	Rx Maximum Input Level	MCS11	-	-11	-	dBm	

2.6.2.8 WLAN 5GHz 802.11ax (HE40)

The Specification applies for Topr.= 25 degrees C, Supply voltage=Typical voltage

No	Parameter	Condition	Min	Typ	Max	Unit	Remark
1	Tx Power	MCS0-MCS4	-	13	-	dBm	Tolerance :±2dB
		MCS5-MCS7	-	13	-	dBm	
		MCS8-MCS9	-	12	-	dBm	
		MCS10-MCS11	-	10	-	dBm	
2	Spectrum MASK	1st Side Lobe	-	-	-20	dBc	
		2nd Side Lobe	-	-	-28	dBc	
		3rd Side Lobe	-	-	-45	dBc	
3	EVM	MCS11	-	-	-35	dB	
4	Rx sensitivity	MCS11	-	-59.9	-	dBm	
5	Rx Maximum Input Level	MCS11	-	-9	-	dBm	

2.6.2.9 WLAN 5GHz 802.11ax (HE80)

The Specification applies for Topr.= 25 degrees C, Supply voltage=Typical voltage

No	Parameter	Condition	Min	Typ	Max	Unit	Remark
1	Tx Power	MCS0-MCS4	-	12	-	dBm	Tolerance :±2dB
		MCS5-MCS7	-	12	-	dBm	
		MCS8-MCS9	-	12	-	dBm	
		MCS10-MCS11	-	9	-	dBm	
2	Spectrum MASK	1st Side Lobe	-	-	-20	dBc	
		2nd Side Lobe	-	-	-28	dBc	
		3rd Side Lobe	-	-	-40	dBc	
3	EVM	MCS11	-	-	-35	dB	
4	Rx sensitivity	MCS11	-	-58.3	-	dBm	
5	Rx Maximum Input Level	MCS11	-	-10	-	dBm	

Copyright 2026 KAGA FEI Co., Ltd.

Downloaded from Arrow.com.

2.6.3 Bluetooth®

The Specification applies for Topr.= 25 degrees C, Supply voltage =Typical voltage.

No.	Parameter	Condition	Min	Typ	Max	Unit	Remark
1	RF frequency range		2402	–	2480	MHz	
2	Tx Power	Basic Rate	–	17	–	dBm	Tolerance :±2dB
		EDR	–	8	–	dBm	
3	Rx Sensitivity	Basic Rate	–	−94.4	–	dBm	
		EDR	–	−90.3	–		
4	Receiver maximum input level	Basic Rat	–	−6	–	dBm	
		EDR	–	−9	–		

2.6.4 Bluetooth® LE

The Specification applies for Topr.= 25 degrees C, Supply voltage =Typical voltage.

No.	Parameter	Condition	Min	Typ	Max	Unit	Remark
1	RF frequency range		2402	–	2480	MHz	
2	Tx Power	Bluetooth® LE 1M	–	17	–	dBm	Tolerance :±2dB
		Bluetooth® LE 2M	–	17	–	dBm	
3	Rx Sensitivity	Bluetooth® LE 1M	–	−99.7	–	dBm	
		Bluetooth® LE 2M	–	−98.0	–		
		Bluetooth® LE Coded 125k	–	−105.2	–		
4	Receiver maximum input level	Bluetooth® LE 1M	–	−6	–	dBm	
		Bluetooth® LE 2M	–	−6	–		
		Bluetooth® LE Coded 125k	–	−6	–		

Copyright 2026 KAGA FEI Co., Ltd.

Downloaded from Arrow.com.

3 Block Diagram

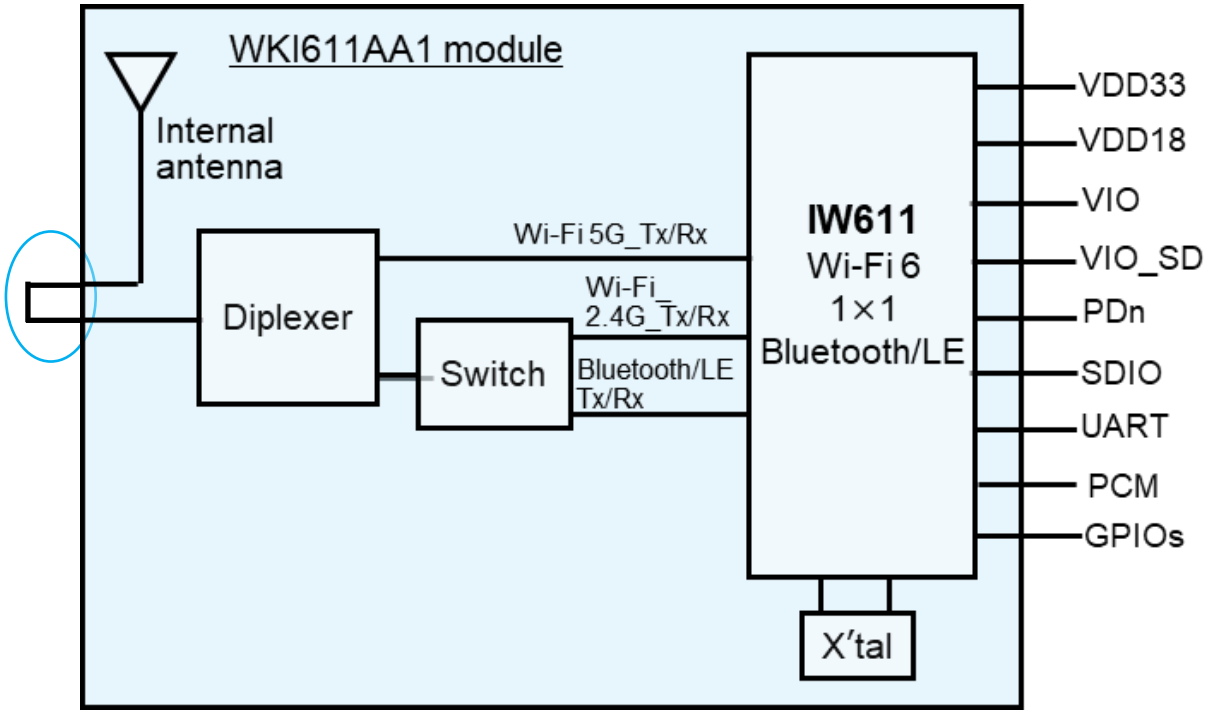

Host interfaces	
WLAN	**Bluetooth®**
SDIO	UART

When using the internal antenna of the module, we recommend connecting PAD33(ANT_I/O) and PAD34(RF_I/O) as short as possible.

If you need to measure the antenna performance and RF conduction performance, please draw a tie line of PAD33(ANT_I/O) and PAD34(RF_I/O) outside a module in advance. When measuring, please cut off the signal line and attach the RF connector cable.

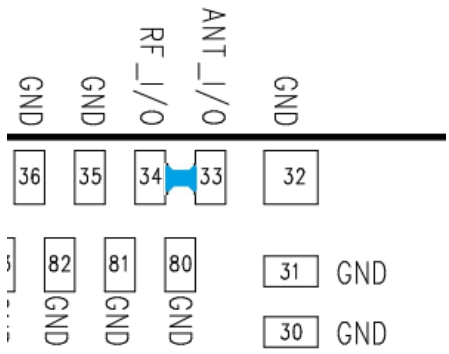

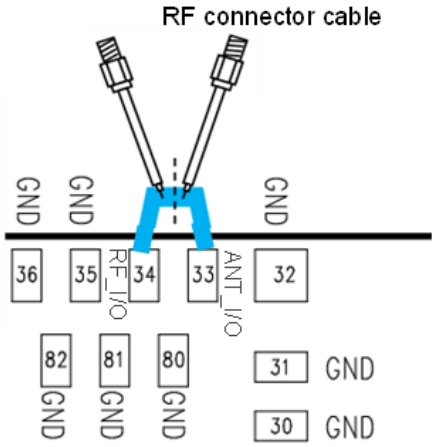

Copyright 2026 KAGA FEI Co., Ltd.

Downloaded from Arrow.com.

4 Mechanical Outline

4.1 Outline Dimensions

Unit: mm Unless otherwise specified, tolerance: ±0.2 mm

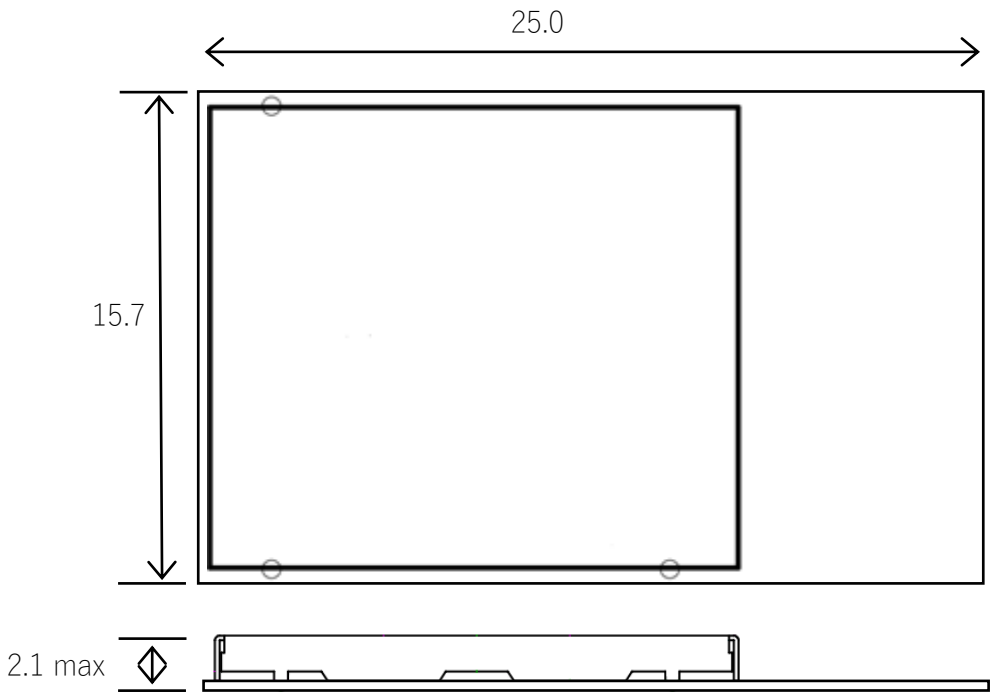

PAD number [Top View]

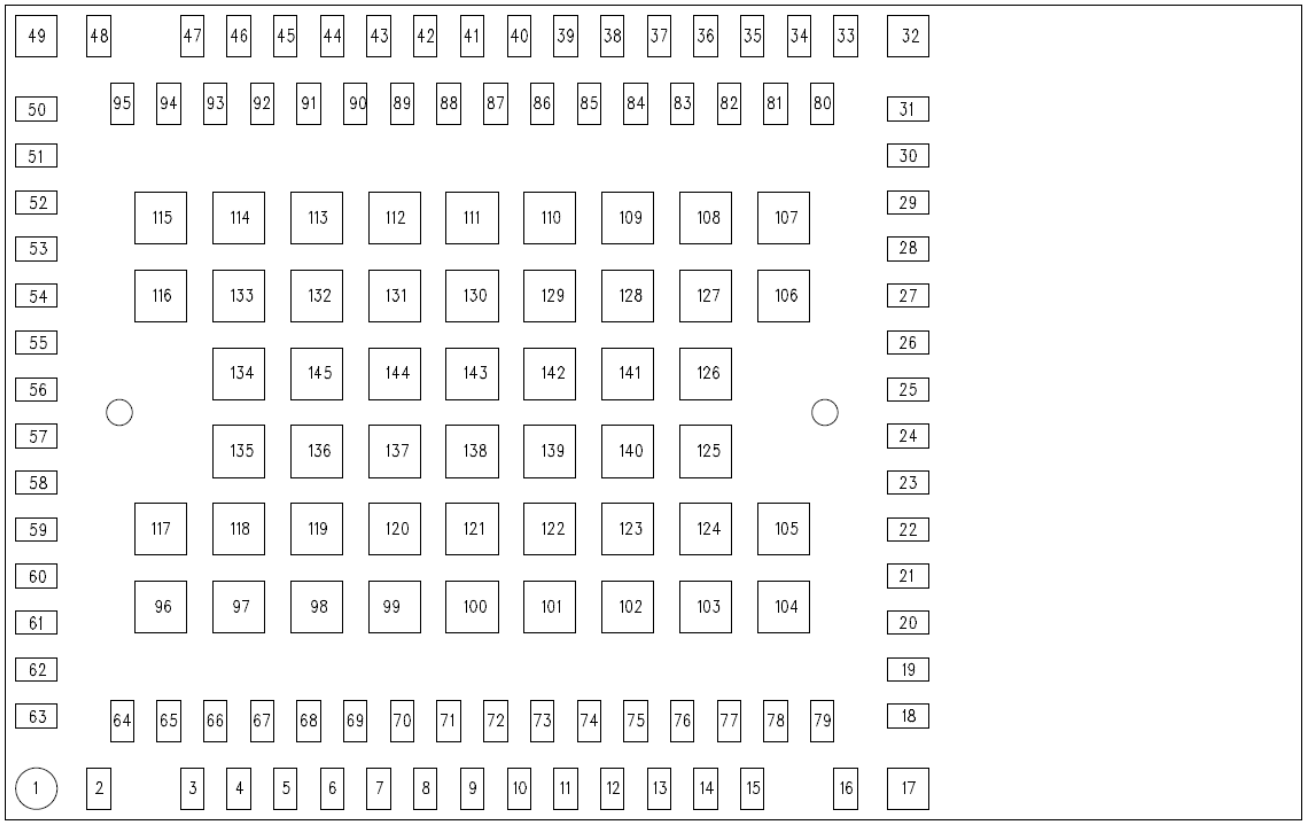

Copyright 2026 KAGA FEI Co., Ltd.

Downloaded from Arrow.com.

4.2 Shield Case Marking

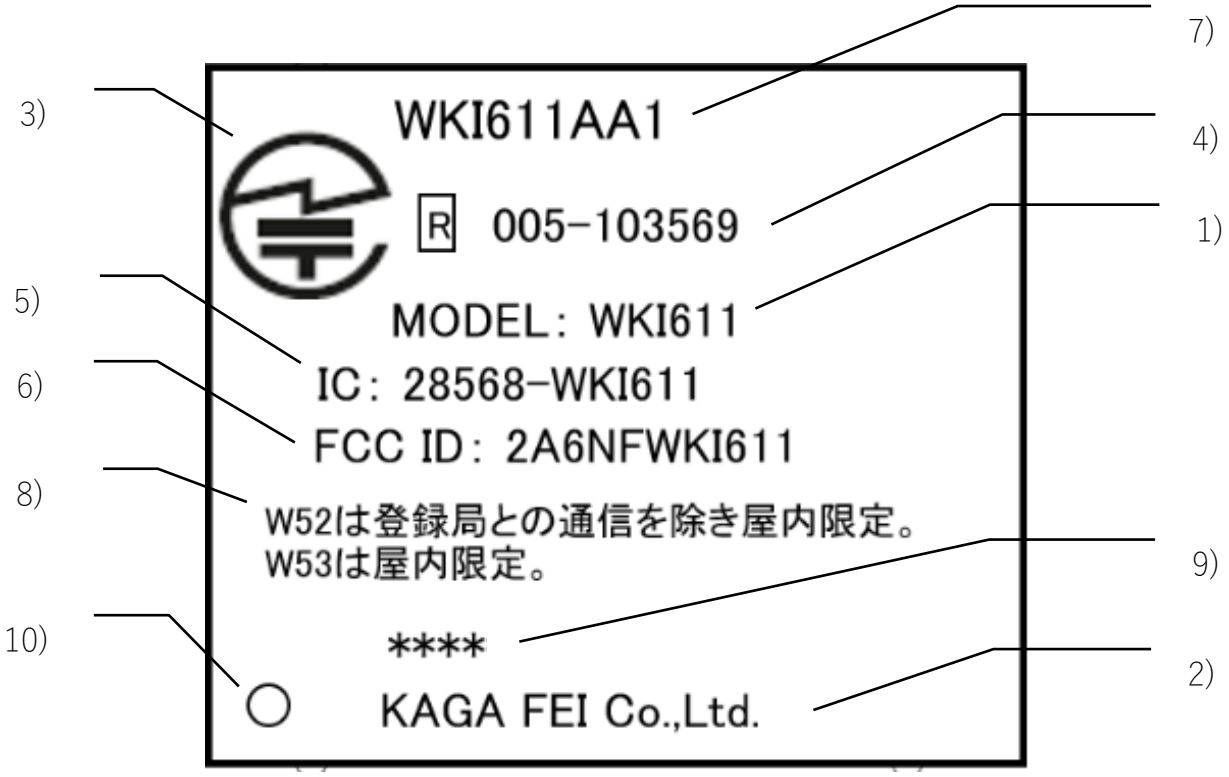

1)	Model	: WKI611
2)	Manufacture	: KAGA FEI Co., Ltd.
3)	Japan technical conformity mark	
4)	Technical Standards Conformity Certification Number for Japan	: 005-103569
5)	ISED certification number	: 28568-WKI611
6)	FCC Identifier	: 2A6NFWKI611
7)	Part Number	: WKI611AA1
8)	Note	: W52 は登録局との通信を除き屋内限定。W53 は屋内限定。
9)	Lot number	: Four digits
10)	Pin 1 mark	: O

Copyright 2026 KAGA FEI Co., Ltd.

Downloaded from Arrow.com.

4.3 Module Pad Dimensions

Unit: mm Unless otherwise specified, tolerance: ±0.2 mm

(TOP VIEW)

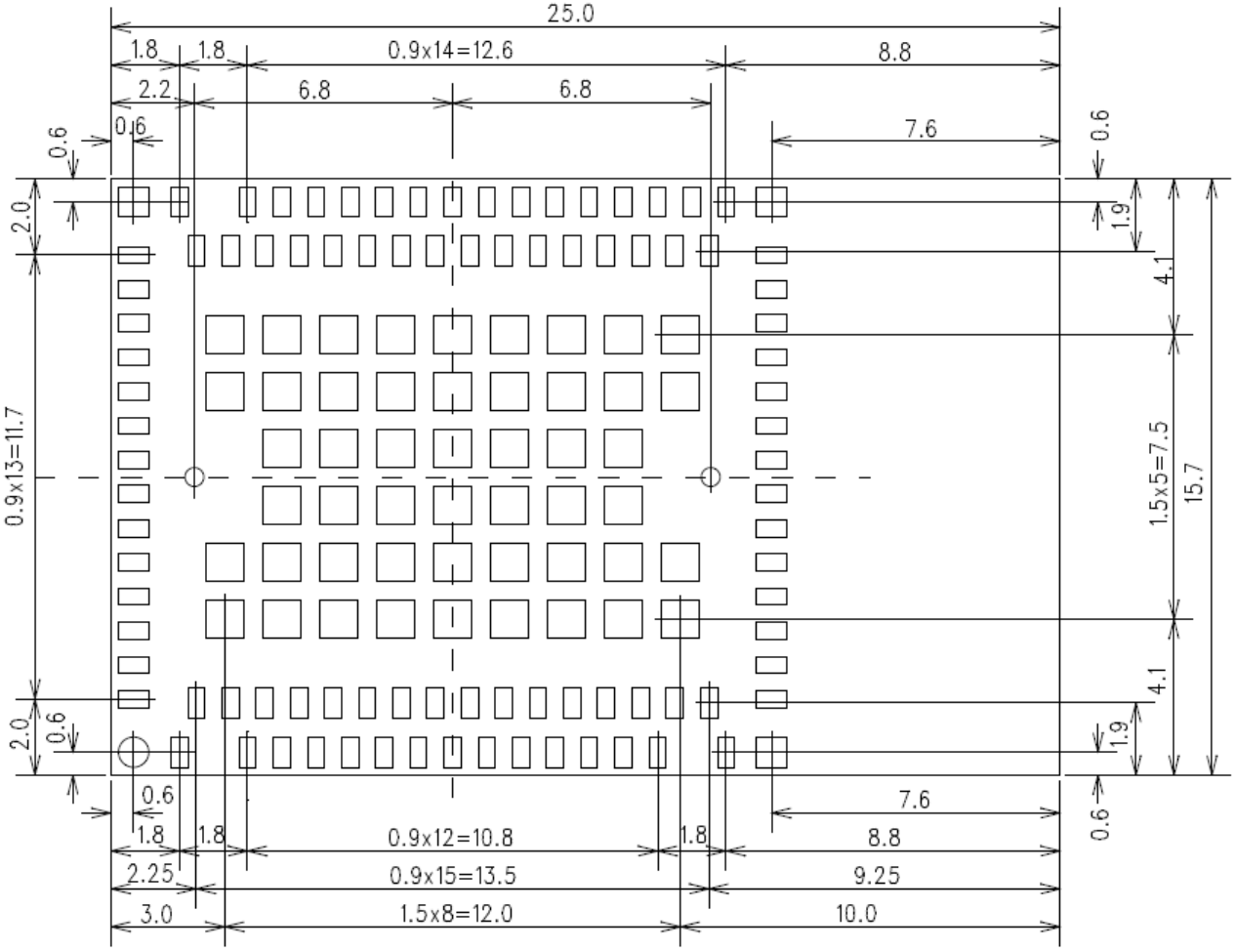

Signal pad (91) : 0.45 x 0.8 mm
Corner pad (1) : ϕ0.8 mm
Corner pad (3) : □0.8 mm
Center pad (50) : □1.0 mm
Fiducial mark (2) : ϕ0.5 mm

4.4 Recommended Land Pattern Dimensions

It is recommended that the pad size on the motherboard be the same as that of the module.

Copyright 2026 KAGA FEI Co., Ltd.

Downloaded from Arrow.com.

4.5 Recommended Solder Paste Stencil Dimensions

Please refer to the dimensions below for the stencil design.
A metal mask thickness of **0.1 mm** is recommended.

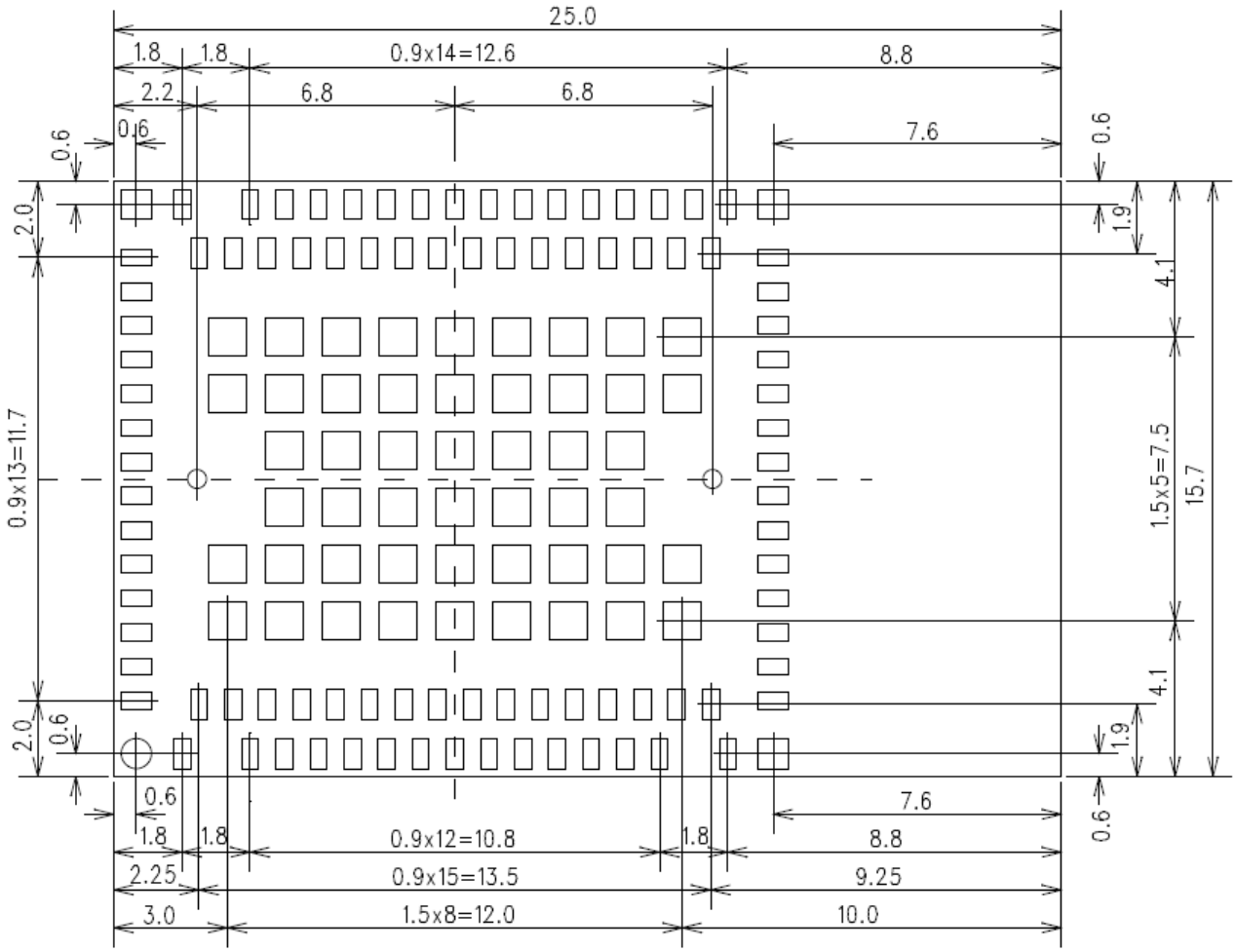

Signal pad (91) : 0.45 x 0.8 mm
Corner pad (1) : ϕ0.65 mm
Corner pad (3) : □0.65 mm
Center pad (50) : □1.0 mm

Copyright 2026 KAGA FEI Co., Ltd.

Downloaded from Arrow.com.

5 Pin Configuration

Pin No.	Module pin name	Type	Power domain	Description	Remark
1	GND	-	Ground	GND	-
2	AVDD18_1	I	Power	1.8V power supply	-
3	GPIO[21]	I/O	VIO	Multi-functional pin: - SD_INT: SDIO interrupt signal (output). - GPIO[21] (input/output)	-
4	GPIO[20]	I/O	VIO	Multi-functional pin: - GPIO[20] (input/output)	-
5	GPIO[15]	I/O	VIO	Multi-functional pin: - GPIO[15] (input/output)	-
6	GPIO[14]	I/O	VIO	Multi-functional pin: - GPIO[14] (input/output)	-
7	GPIO[13]	I/O	VIO	Multi-functional pin: - GPIO[13] (input/output)	-
8	GPIO[12]	I/O	VIO	Multi-functional pin: - GPIO[12] (input/output)	-
9	GND	-	Ground	GND	-
10	GPIO[16]	I/O	VIO	Multi-functional pin: - WL_WAKE_IN: WLAN radio wake-up signal (input). - GPIO[16] (input/output)	-
11	GPIO[17]	I/O	VIO	Multi-functional pin: - WL_WAKE_OUT: WLAN radio wake-up signal (output). - GPIO[17] (input/output)	-
12	GPIO[22]	I/O	VIO	Multi-functional pin: - GPIO[22] (input/output)	-
13	GPIO[26]	I/O	VIO	Multi-functional pin: - WCI-2_SOUT: Transmit signal to external radio (output). - GPIO[26] (input/output)	-
14	GPIO[25]	I/O	VIO	Multi-functional pin: - WCI-2_SIN: Receive signal from external radio (input). - GPIO[25] (input/output)	-
15	GND	-	Ground	GND	-
16	AVDD18_2	I	Power	1.8V analog power supply	-
17 ~ 32	GND	-	Ground	GND	-
33	ANT_I/O	I/O	-	Internal antenna pin. It should be connected to Pin 34 for using internal antenna.	-
34	RF_I/O	I/O	-	RF I/O pin. It should be connected to Pin 33 for using internal antenna.	-
35	GND	-	Ground	GND	-
36	GND	-	Ground	GND	-
37	AVDD33	I	Power	3.3V analog power supply	-
38	CONFIG_HOST[1]	I	AVDD18	Host configuration option. Selects the host interface used for WLAN and Bluetooth. Refer to table-1.	-
39	CONFIG_HOST[0]	I	AVDD18	Host configuration option. Selects the host interface used for WLAN and Bluetooth. Refer to table-1.	-
40	PDN	I	AVDD18	Full Power-down (input) (active low) 0 = full power down mode, 1 = normal mode PDn can accept an input of 1.8V to 4.5V. PDn may be driven by the host. PDn must be high for normal operation. No internal pull-up on this pin. This pin has an always-on internal weak pull-down.	-

Copyright 2026 KAGA FEI Co., Ltd.

Downloaded from Arrow.com.

Pin No.	Module pin name	Type	Power domain	Description	Remark
41	GND	-	Ground	GND	-
42	GPIO[1]	I/O	VIO	Multi-functional pin: - IND_RST_WL: Independent software reset for WLAN (input). - GPIO[1] (input/output)	-
43	GPIO[2]	I/O	VIO	Multi-functional pin: - IND_RST_BT: Independent software reset for Bluetooth (input). - GPIO[2] (input/output)	-
44	GPIO[24]	I/O	VIO	Multi-functional pin: - GPIO[24] (input/output)	-
45	GPIO[19]	I/O	VIO	Multi-functional pin: - BT_WAKE_OUT: Bluetooth wake-up signal (output). - GPIO[19] (input/output)	-
46	GPIO[18]	I/O	VIO	Multi-functional pin: - BT_WAKE_IN: Bluetooth wake-up signal (input). - GPIO[18] (input/output)	-
47	GND	-	Ground	GND	-
48	VIO	I	Power	1.8V/3.3V digital I/O power supply	
49	GND	-	Ground	GND	-
50	UART_CTS	I	VIO	Multi-functional pin: - UART clear-to-send input signal - GPIO[8] (input/output)	-
51	UART_RTS	O	VIO	Multi-functional pin: - UART request-to-send output signal - GPIO[9] (input/output)	-
52	UART_RX	I	VIO	Multi-functional pin: - UART serial input signal - GPIO[10] (input/output)	-
53	UART_TX	O	VIO	Multi-functional pin: - UART serial output signal - GPIO[11] (input/output)	-
54	GND	-	Ground	GND	-
55	GND	-	Ground	GND	-
56	SD_DATA[3]	I/O	VIO_SD	SDIO 4-bit mode: Data line bit[3] SDIO 1-bit mode: Reserved	-
57	SD_DATA[2]	I/O	VIO_SD	SDIO 4-bit mode: Data line bit[2] or read wait (optional) SDIO 1-bit mode: Read wait (optional)	-
58	SD_DATA[1]	I/O	VIO_SD	SDIO 4-bit mode: Data line bit[1] SDIO 1-bit mode: Interrupt	-
59	SD_DATA[0]	I/O	VIO_SD	SDIO 4-bit mode: Data line bit[0] SDIO 1-bit mode: Data line	-
60	SD_CMD	I/O	VIO_SD	SDIO 4-bit mode: Command/response (input/output) SDIO 1-bit mode: Command line (input/output)	-
61	SD_CLK	I	VIO_SD	SDIO 4-bit mode: Clock input SDIO 1-bit mode: Clock input	-
62	GND	-	Ground	GND	-
63	VIO_SD	I	Power	1.8V/3.3V digital I/O SDIO power supply	-
64 ~ 67	GND	-	Ground	GND	-
68	JTAG_TCK	I	VIO	Multi-functional pin: - JTAG test clock input signal. - GPIO[28] (input/output)	-
69	JTAG_TMS	I	VIO	Multi-functional pin: - JTAG test mode select input signal. - GPIO[29] (input/output)	-

Copyright 2026 KAGA FEI Co., Ltd.

Downloaded from Arrow.com.

Pin No.	Module pin name	Type	Power domain	Description	Remark
70	JTAG_TDI	I	VIO	Multi-functional pin: - JTAG test data input signal. - GPIO[30] (input/output)	-
71	JTAG_TDO	O	VIO	Multi-functional pin: - JTAG test data output signal. - GPIO[31] (input/output)	-
72	GND	-	Ground	GND	-
73	RF_CNTL0	O	AVDD33	RF control line 0.	-
74	RF_CNTL3	I	AVDD33	RF control line 3 CONFIG_XOSC_SEL: Reference clock frequency select. No external circuitry is required to set a configuration bit to 1. 1 = 40MHz	-
75	RF_CNTL4	I	AVDD33	RF control line 4.	-
76	GPIO[23]	I/O	VIO	Multi-functional pin: - GPIO[23] (input/output)	-
77	GPIO[27]	I/O	VIO	Multi-functional pin: - GPIO[27] (input/output)	-
78 ~ 84	GND	-	Ground	GND	-
85	GPIO[0]	I/O	VIO	GPIO[0] (input/output)	-
86	GND	-	Ground	GND	-
87	GND	-	Ground	GND	-
88	PCM_MCLK	I/O	VIO	Multi-functional pin: - PCM codec main clock signal (optional). Optional clock used for some codecs. Derived from PCM_CLK. - I2S_CCLK: I2S codec main clock signal (optional). Optional clock used for some codecs. Derived from I2S_BCLK. - GPIO[3] (input/output)	-

89	PCM_CLK	I/O	VIO	Multi-functional pin:
				- PCM clock signal
				  - Central mode: output
				  - Peripheral mode: input
				- I2S audio bit clock.
				  - Central mode: output
				  - Peripheral mode: input
				- GPIO[4] (input/output)
					-

90	PCM_DOUT	O	VIO	Multi-functional pin: - PCM transmit data signal (output). - I2S_DOUT: I2S transmit data signal (output). - GPIO[5] (input/output)	-
91	PCM_DIN	I	VIO	Multi-functional pin: - PCM receive data signal (input). - I2S_DIN: I2S receive data signal (input). - GPIO[6] (input/output)	-

92	PCM_SYNC	I/O	VIO	Multi-functional pin:
				- PCM frame sync
				  - Central mode: output
				  - Peripheral mode: input
				- I2S_LRCLK: I2S left/right clock.
				  - Central mode: output
				  - Peripheral mode: input
				- GPIO[7] (input/output)
					-

93 ~ 145	GND	-	Ground	GND	-

Copyright 2026 KAGA FEI Co., Ltd.

Downloaded from Arrow.com.

Table-1 Host Configuration Options

The definition of these pins changes immediately after reset to their usual function.
Please use the configuration bit set to 1. No external circuitry is required to set the configuration bit to 1.

[Table-1]

Config Host		WLAN	Bluetooth / Bluetooth LE
[1]	[0]		
1	1	SDIO	UART

Copyright 2026 KAGA FEI Co., Ltd.

Downloaded from Arrow.com.

6 MAC Address Format

The MAC and BD address are hexadecimal codes composed of either 6 bytes.
These codes have been written into the OTP (One Time Programmable ROM) of the WKI611AA1.

Wireless Application	Upper 3 bytes						Lower 3 bytes					
	Manufacturer code						User code					
Wireless LAN	F	C	3	3	5	7	*	*	*	*	*	*
Bluetooth / Bluetooth LE	F	C	3	3	5	7	*	*	*	*	*	*

・Manufacturer Code : Unique hexadecimal code assigned to Kaga FEI. (FC:33:57)
Please note that the code may change in the future, but in that case,
it will be changed automatically without any notice to you.

・User Code : Arbitrary hexadecimal code assigned to each module.

Copyright 2026 KAGA FEI Co., Ltd.

Downloaded from Arrow.com.

7 Handling Precautions

This specification describes desire and conditions especially for mounting.

Desire/Conditions

(1) Environment conditions for use and storage

1. Store the components in an environment of < **40deg-C/90%RH** if they are in a moisture barrier bag packed by KAGA FEI.
2. Keep the factory ambient conditions at < **30deg-C/60%RH** .
3. Store the components in an environment of < **25±5deg-C/10%RH** after the bag is opened. (The condition is also applied to a stay in the manufacture process).

(2) Conditions for handling of products

Make sure all of the moisture barrier bags have no holes, cracks or damages at receiving. If an abnormality is found on the bag, its moisture level must be checked in accordance with 2 in (2).

Refer to the label on the bag.

1. All of the surface mounting process (reflow process) must be completed **in 12 months** from the bag sea date.
2. Make sure humidity in the bag is less than **10%RH** immediately after open, using a humidity indicator card sealed with the components.
3. **All** of the surface mounting process (reflow process including rework process) must be completed in **168 hours** after the bag is opened (inclusive of any other processes).
4. If any conditions in (1) or condition 2 and 3 in (2) are not met, bake the components in accordance with the conditions at **125deg-C 24hours.**
5. As a rule, baking the components in accordance with conditions 4 in (2) shall be once.
6. Since semi-conductors are inside of the components, they must be free from static electricity while handled.(<100V) Use ESD protective floor mats, wrist straps, ESD protective footwear, air ionizers etc. , if necessary.
7. Please make sure that there are lessen mechanical vibration and shock for this module, and do not drop it.
8. Please recognize pads of back side at surface mount.
9. Washing the module is not recommended. If washing cannot be avoided, please test module functionality and performance after thoroughly drying the module.
   We cannot be held responsible for any failure due washing the module.

Copyright 2026 KAGA FEI Co., Ltd.

Downloaded from Arrow.com.

10. Please perform temperature conditions of module at reflow within the limits of the following ranges. Please give the number of times of reflow as a maximum of 2 times.

Recommended Reflow Soldering Profile

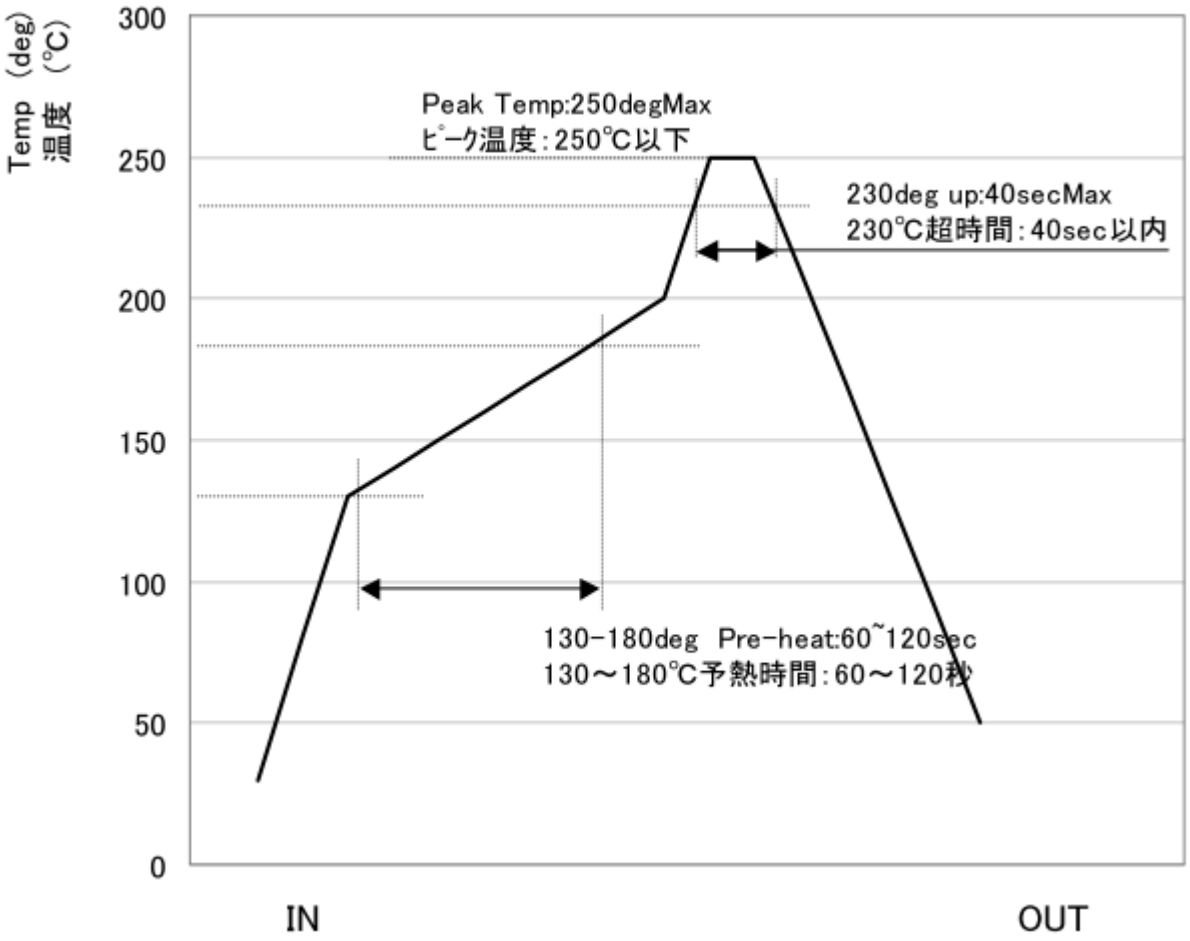

Copyright 2026 KAGA FEI Co., Ltd.

Downloaded from Arrow.com.

8 Packaging Specifications

(1) Packaging Materials

Name	Outline	Materials	Note
Tray	315 × 135.9 × 7.62(mm)	Conductive PPE	60 pieces/tray
Antistatic band	8mm wide	Antistatic PP	–
Desiccant	–	Desi-Pak	–
Humidity indicator card	–	–	–
Aluminum moisture barrier bag	260 × 460(mm)	(AS)PET / AL/NY / PE(AS)	–
Buffer corrugated paper	–	Corrugated fiberboard	–
Label	–	–	–
Corrugated cardboard box (Inner)	345 × 205 × 95(mm)	Corrugated fiberboard	–
Corrugated cardboard box (Outer)	436 × 361 × 220(mm)	Corrugated fiberboard	–

(2) Packaging Unit

60 pieces/tray × 10 trays = 600 pieces

(3) Packaging Figure

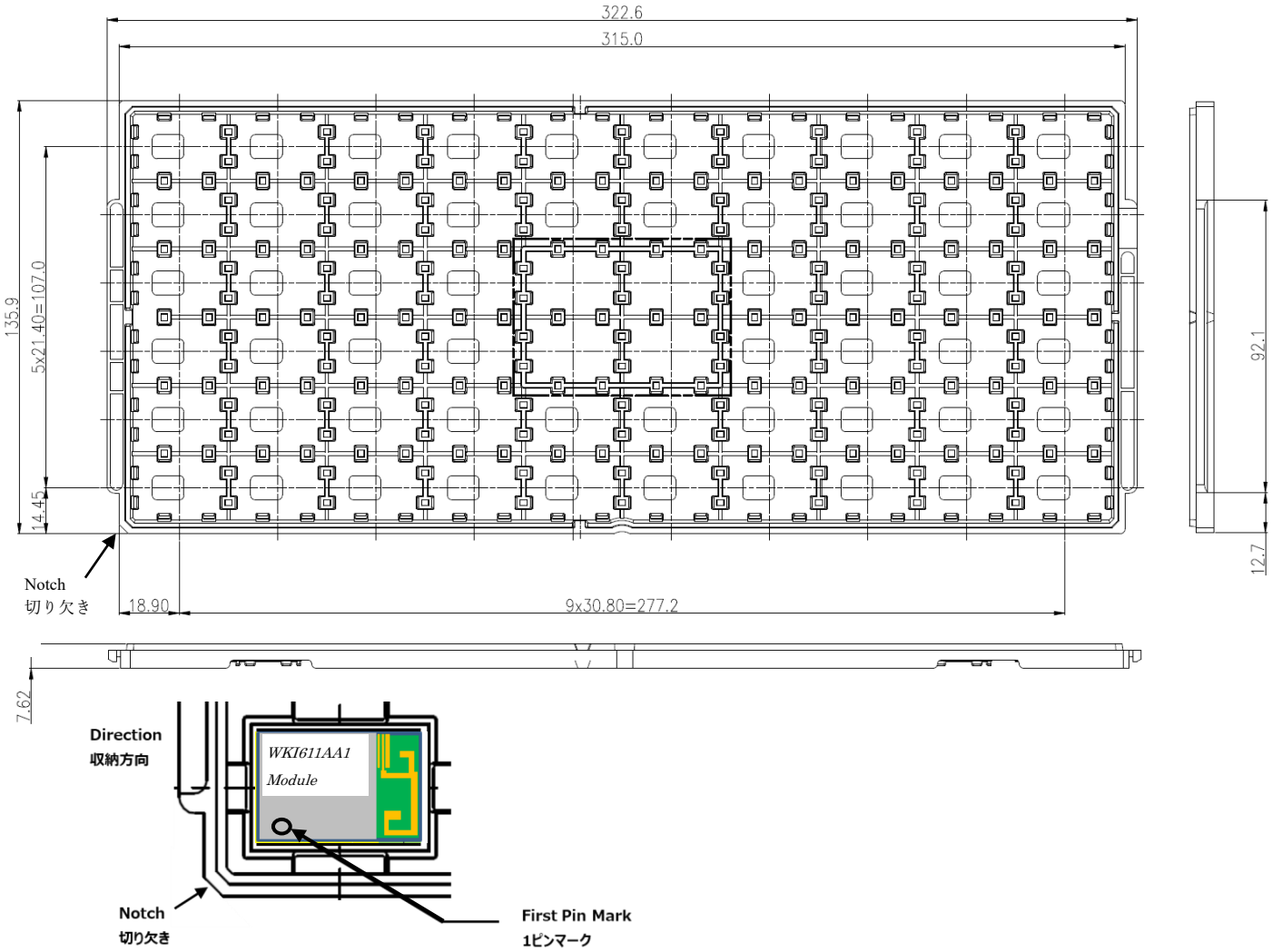

Copyright 2026 KAGA FEI Co., Ltd.

Downloaded from Arrow.com.

Inner Box
内装箱

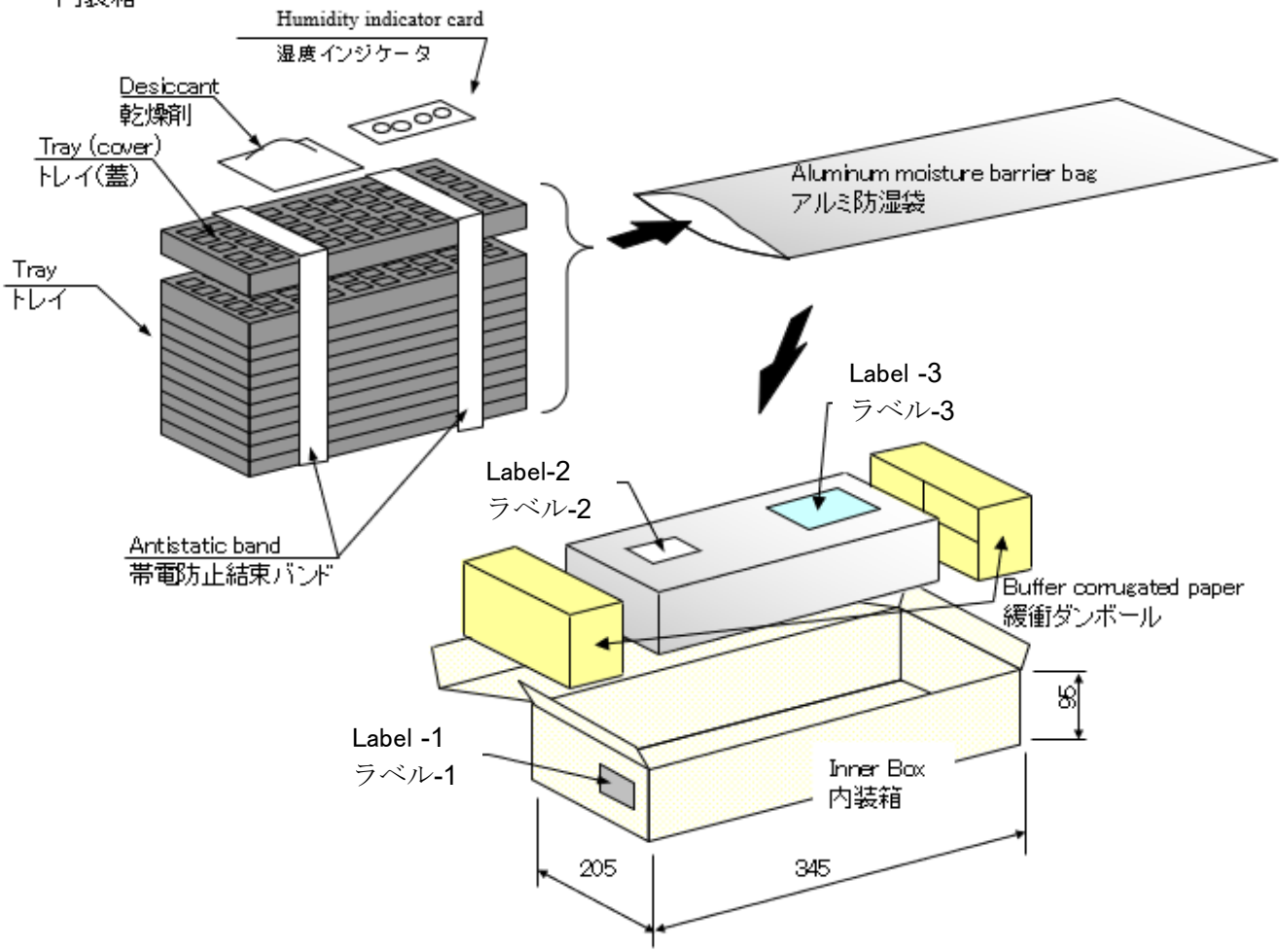

Outer Box
外装箱

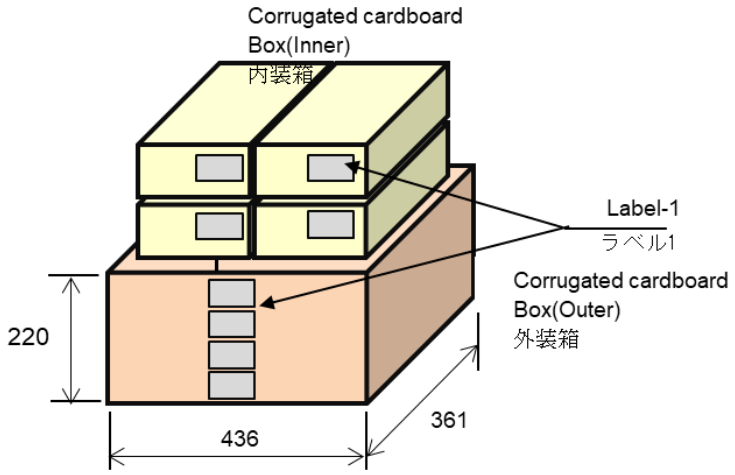

Copyright 2026 KAGA FEI Co., Ltd.

Downloaded from Arrow.com.

(4) Label

Label-1

- Purchase order
- Part No.
- Quantity
- Lot No.
- Country of origin

Label-2

- Serial No.
- Part No.
- Quantity
- Country of origin

Label-3

- Caution label
- Moisture Sensitivity Level

Copyright 2026 KAGA FEI Co., Ltd.

Downloaded from Arrow.com.

9 Antenna Application Note

1. Recommended module mounting example

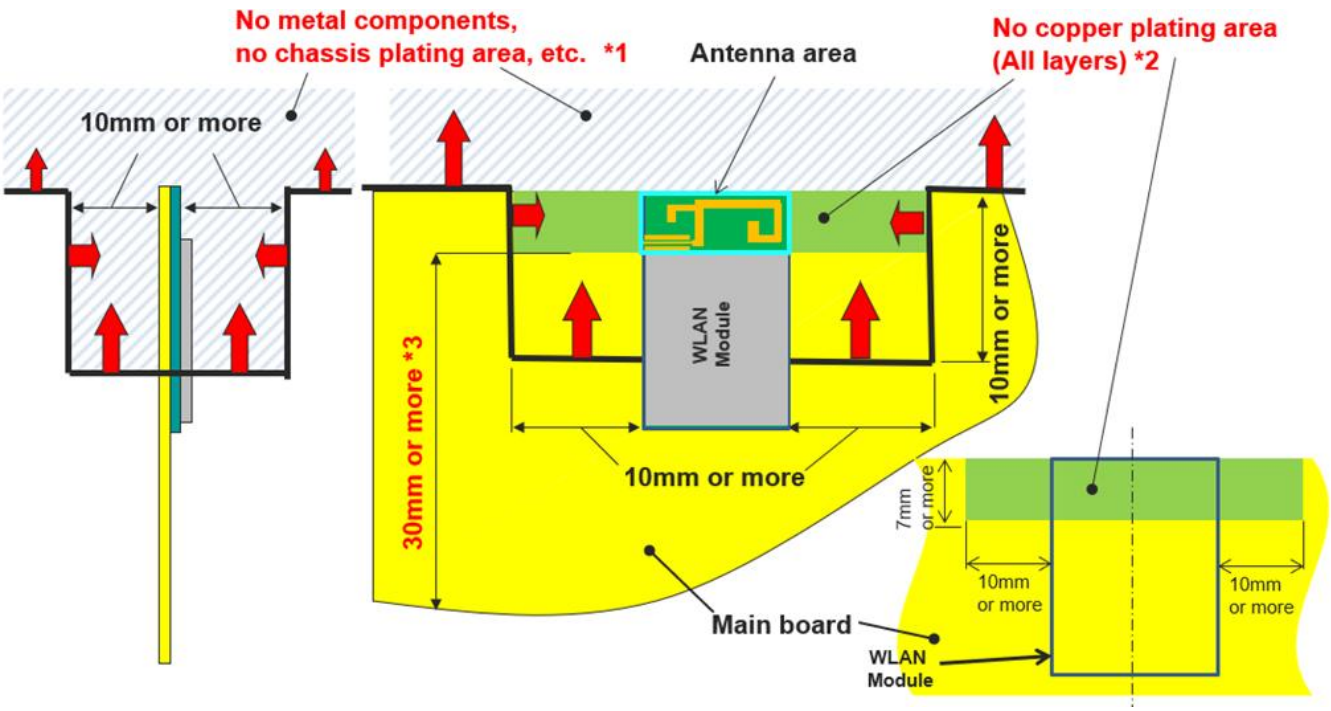

*1 Please do not place any metal components in blue shaded space.(*1) We do not recommend placing any metal objects upper space of the module in the above figure. If it needs to place metal objects, please consider keeing the metal off from the antenna as far as you can. Such as signal line and metal chassis as possible except for main board while mounting the components in *1 space on the main board is allowed except for no copper plating area. (*2).

*2 This area is routing prohibited area on the main board. Please do not place copper on any layer. Please remain use of FR-4 dielectric material. The antenna is tuned with the FR-4.

*3 Characteristics may deteriorate when GND pattern length is less than 30mm. It should be 30 mm or more as possible.

Even when above mentioned condition is satisfied, communication performance may be significantly deteriorated depending on the structure of the product.

Copyright 2026 KAGA FEI Co., Ltd.

Downloaded from Arrow.com.

2. Other module mounting examples

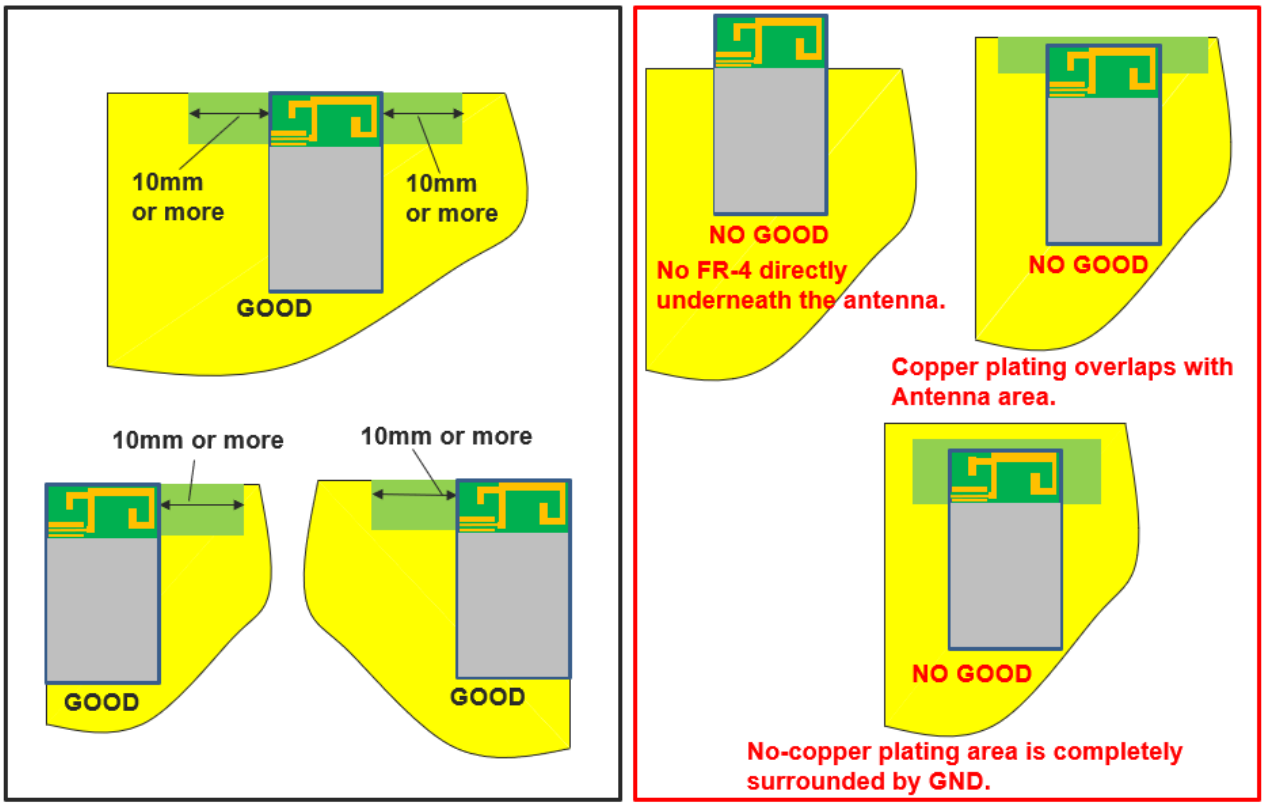

3. Placement of resin or plastic parts

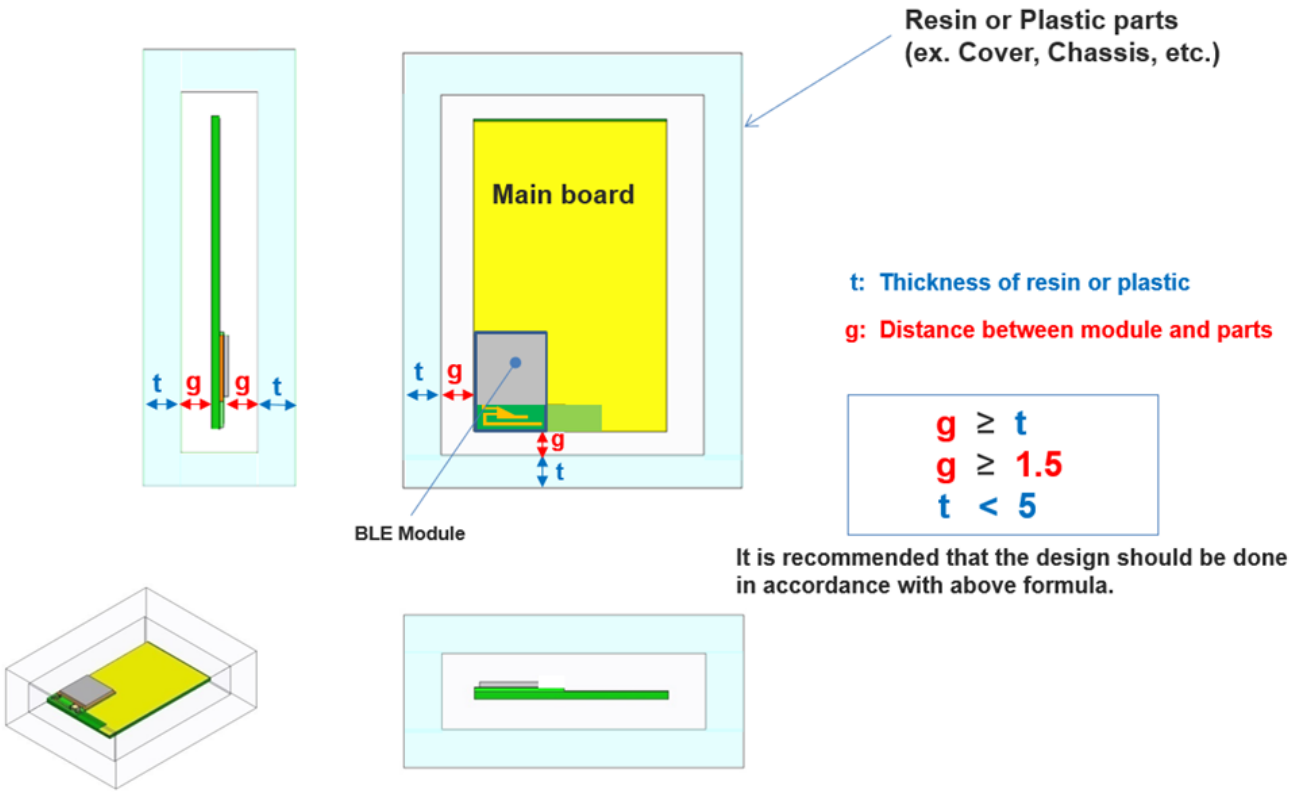

Please do not apply molding over the antenna area of WLAN module.

Copyright 2026 KAGA FEI Co., Ltd.

Downloaded from Arrow.com.

4. Directional characteristics example (when mounted on evaluation board) 2.4GHz Band

Measurement data of antenna

Appearance and coordinates definition

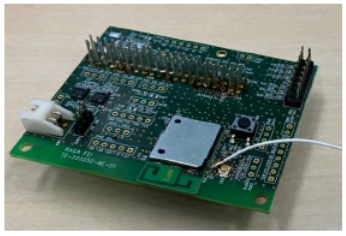

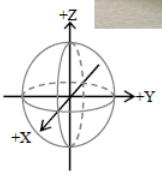

Frequency	[MHz]	@2400	@2450	@2500
Peak gain		[dBi]		
3-plane	TX-H	0.2	0.9	1.0
	TX-V	-0.2	0.7	0.9
		0.2	**0.9**	**1.0**
Average gain		[dBi]		
XY-plane	TX-H	-3.6	-2.6	-2.5
	TX-V	-23.2	-22.4	-21.8
	Plus(H,V)	-3.5	-2.5	-2.5
YZ-plane	TX-H	-7.7	-7.0	-6.8
	TX-V	-2.4	-1.7	-1.7
	Plus(H,V)	-1.3	-0.6	-0.6
XZ-plane	TX-H	-11.1	-10.9	-11.2
	TX-V	-3.9	-2.7	-2.4
	Plus(H,V)	-3.1	-2.1	-1.8
3plane	TX-H	-6.4	-5.6	-5.5
	TX-V	-4.8	-3.9	-3.8
		-2.5	**-1.7**	**-1.6**
Efficiency	[dB]	**-2.8**	**-2.0**	**-1.9**
VSWR	[:1]	2.5	1.7	1.1

*Note:The value is average value in 1 round of each inclination direction angle.

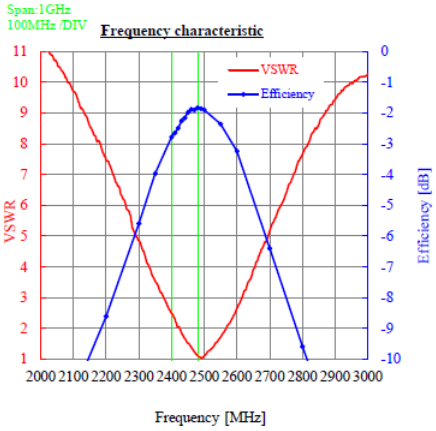

Radiation pattern

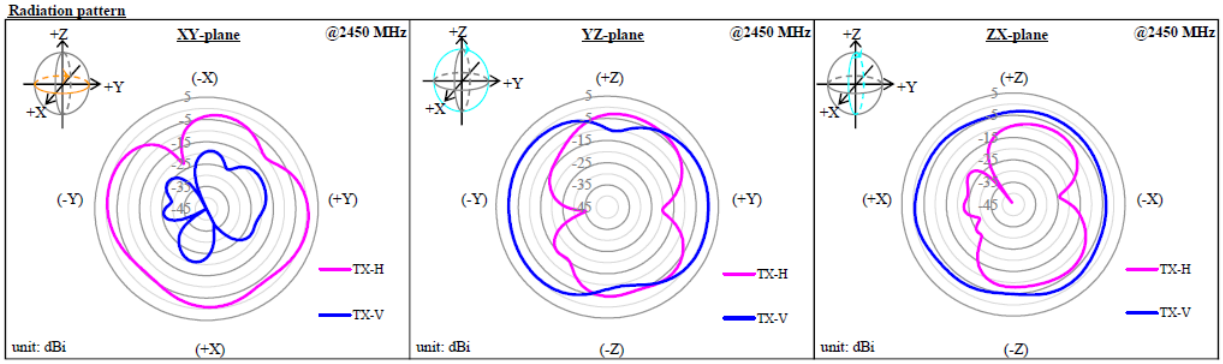

Copyright 2026 KAGA FEI Co., Ltd.

Downloaded from Arrow.com.

5GHz Band

Measurement data of antenna

Appearance and coordinates definition

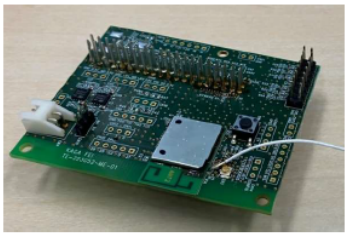

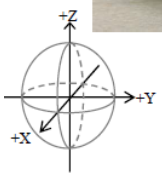

Frequency	[MHz]	@5150	@5400	@5850
Peak gain		[dBi]		
3-plane	TX-H	1.4	0.7	0.1
	TX-V	-1.1	-0.1	0.0
		1.4	**0.7**	**0.1**
Average gain		[dBi]		
XY-plane	TX-H	-3.5	-3.2	-4.2
	TX-V	-12.4	-12.9	-11.9
	Plus(H,V)	-3.0	-2.7	-3.5
YZ-plane	TX-H	-5.5	-5.1	-4.3
	TX-V	-5.1	-4.3	-4.2
	Plus(H,V)	-2.3	-1.6	-1.3
XZ-plane	TX-H	-7.8	-7.0	-6.2
	TX-V	-4.6	-4.4	-5.5
	Plus(H,V)	-2.9	-2.5	-2.8
3plane	TX-H	-5.3	-4.8	-4.8
	TX-V	-6.2	-5.8	-6.2
		-2.7	**-2.3**	**-2.4**
Efficiency	**[dB]**	**-2.2**	**-1.9**	**-2.6**
VSWR	**[:1]**	1.6	1.2	1.6

*Note:The value is average value in 1 round of each inclination direction angle.

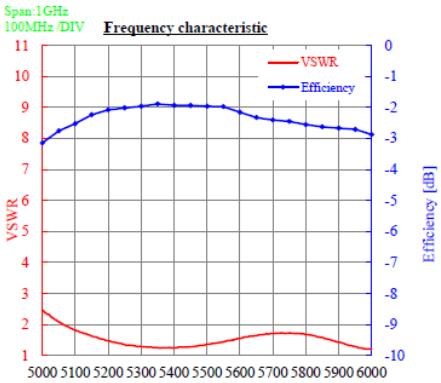

Radiation pattern

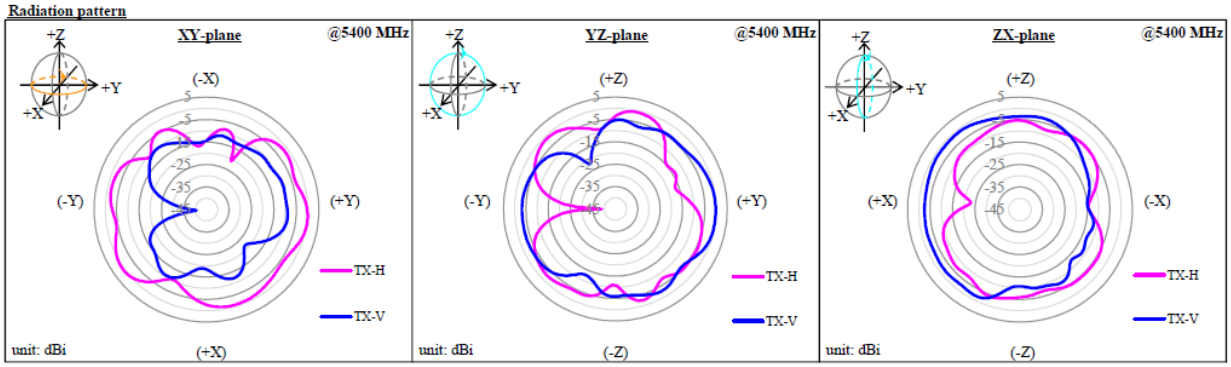

5. About this Application Note

- This Application Note has been prepared as a reference material to help obtaining the antenna performance mounted on **WKI611AA1** module better while it is not guaranteed or assured to obtain better communication performance and distance.
- This product **"WKI611AA1** module" has been certified and matching circuit constant for antenna within module cannot be changed when ambient environment condition changes. The product must be re-certified when matching circuit constant is changed.

Copyright 2026 KAGA FEI Co., Ltd.

Downloaded from Arrow.com.

Other Precautions

■ Please conduct validation and verification of our products in actual condition of mounting and operating environment before using our products.

■ The products listed in this Specification are intended for use in general electronic equipment (e.g., AV equipment, OA equipment, home electric appliances, office equipment, information and communication equipment including, without limitation, mobile phone, and PC). Please be sure to contact KAGA FEI for further information before using the products for any equipment which may directly cause loss of human life or bodily injury (e.g., transportation equipment including, without limitation, automotive power train control system, train control system, and ship control system, traffic signal equipment, disaster prevention equipment, medical equipment classified as Class I, II or III by IMDRF, highly public information network equipment including, without limitation, telephone exchange, and base station).
Please do not incorporate our products into any equipment requiring high levels of safety and/or reliability (e.g., aerospace equipment, aviation equipment, medical equipment classified as Class IV by IMDRF, nuc lear control equipment, undersea equipment, military equipment).
When our products are used even for high safety and/or reliability-required devices or circuits of general electronic equipment, it is strongly recommended to perform a thorough safety evaluation prior to use of our products and to install a protection circuit as necessary.
Please note that unless you obtain prior written consent of KAGA FEI, KAGA FEI shall not be in any way responsible for any damages incurred by you or third parties arising from use of the products listed in this Specification for any equipment requiring inquiry to KAGA FEI or prohibited for use by KAGA FEI as described above.

■ Information contained in this Specification is intended to convey examples of typical performances and/or applications of our products and is not intended to make any warranty with respect to the intellectual property rights or any other related rights of KAGA FEI or any third parties nor grant any license under such rights.

■ Please note that the scope of warranty for our products is limited to the delivered our products themselves and KAGA FEI shall not be in any way responsible for any damages resulting from a fault or defect in our products.

■ The contents of this Specification are applicable to our products which are purchased from our sales offices or authorized distributors (hereinafter "KAGA FEI's official sales channel"). Please note that the contents of this specification are not applicable to our products purchased from any seller other than KAGA FEI's official sales channel.

■ The contents of this Specification are applied in preference to any agreement between you and KAGA FEI or KAGA FEI's official sales channel (e.g., supply and purchase agreement, quality assurance agreement).

■ You will have deemed accepted the contents of this Specification upon usage of our products.

■ Caution for Export
Some of our products listed in this specification may require specific procedures for export according to "U.S. Export Administration Regulations" and other applicable regulations.

Copyright 2026 KAGA FEI Co., Ltd.

Downloaded from Arrow.com.