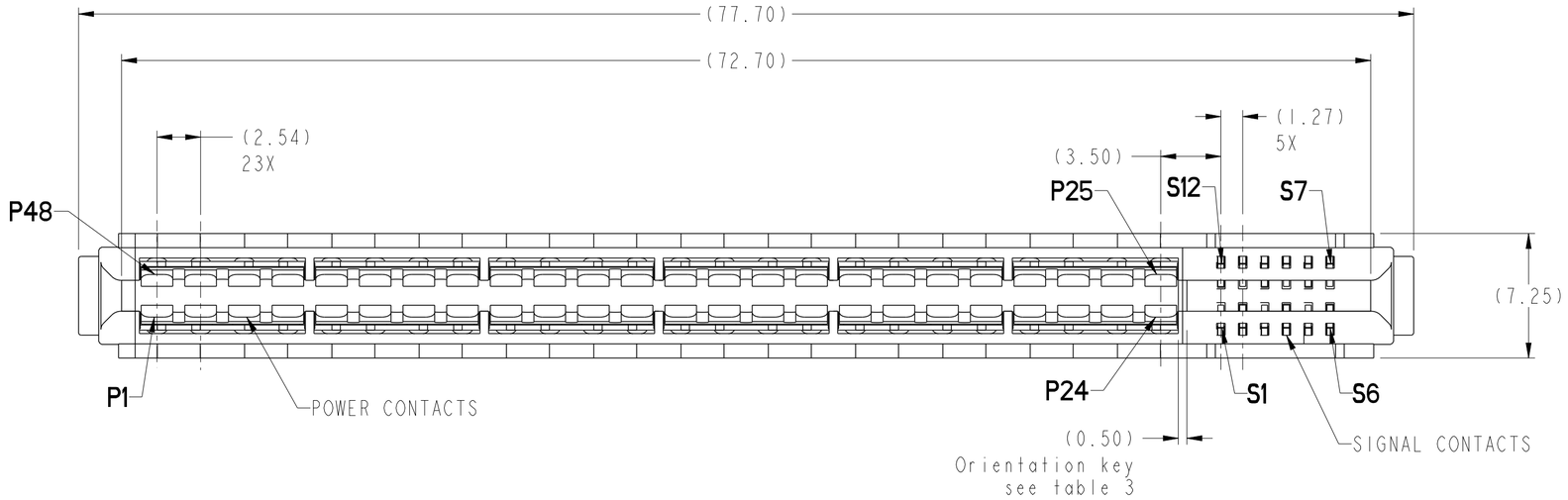

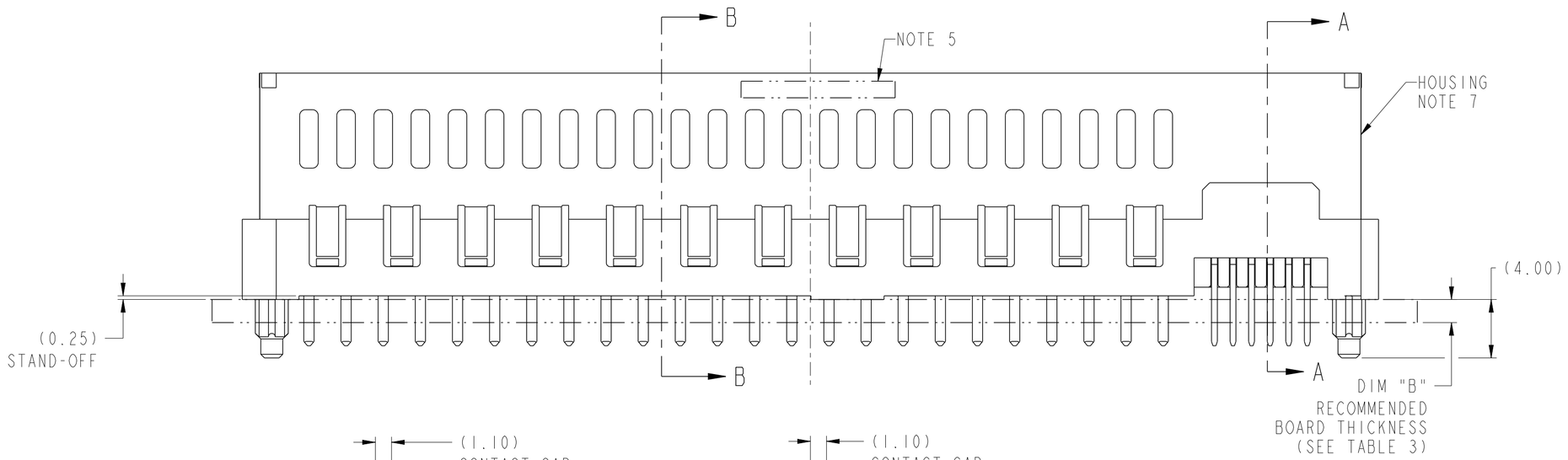

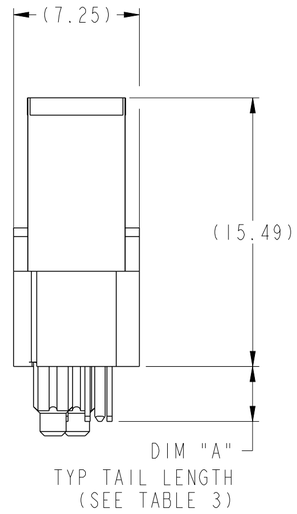

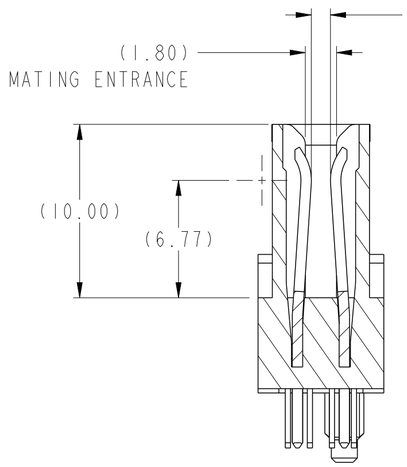

SECTION B-B

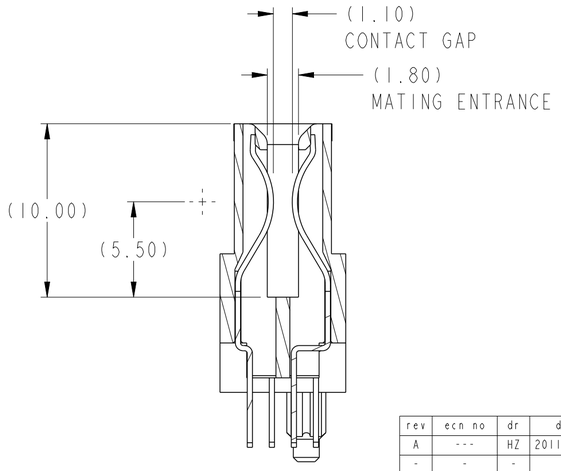

SECTION A-A

rev	ecn no	dr	date
A	---	HZ	2011-08-29
-	-	-	-
-	-	-	-
-	-	-	-
-	-	-	-
-	-	-	-

spec ref	-		
tolerance std	- ASME Y14.5	TOLERANCES UNLESS OTHERWISE SPECIFIED	
surface	- ✓ ASME Y14.5	linear	0.X ±0.30
			0.XX ±0.10
			0.XXX ±0.05
		angular	0° ±2°

dr	Wei-Long Zhang	2011/07/25
eng	Wei-Long Zhang	2011/09/07
chr	Jon Qin	2011/09/07
appr	Pei-Ming Zheng	2011/09/08

projection	MM	size A2	scale 4:1
		ecn no	-
product family	CARD EDGE	rel level	Released

FCI — www.fci.com

title: VERT RECT (48P 12S) HIGH POWER CARD EDGE

dwg no: 10118807 — rev: A

cat. no. - — Product - Customer Drw — sheet 1 of 4

Copyright FCI.

Downloaded from Arrow.com.

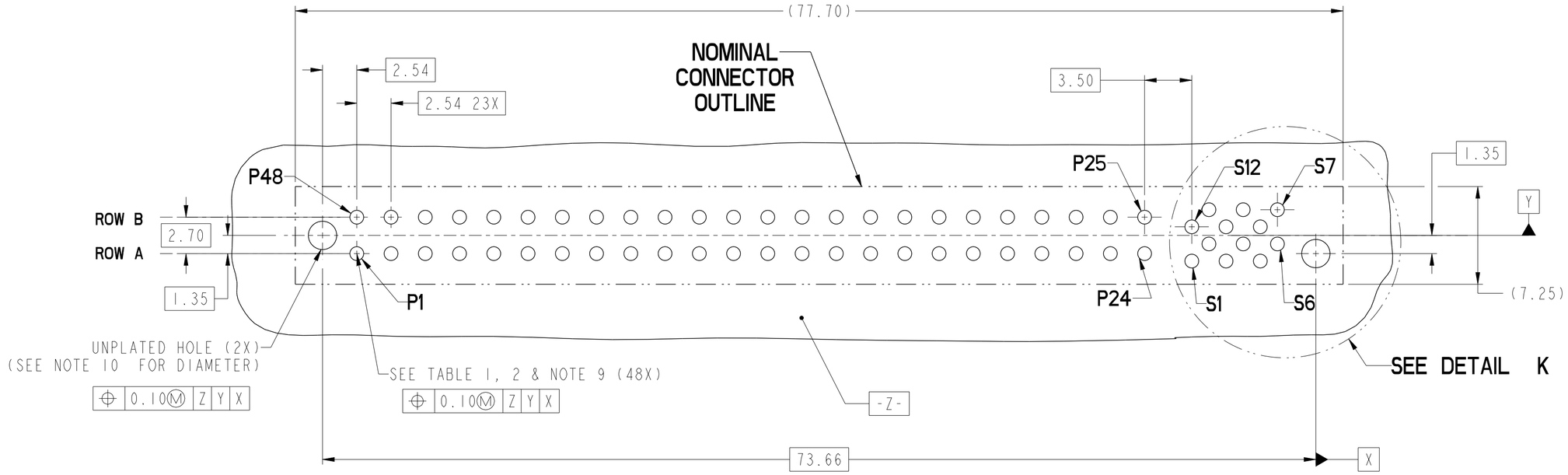

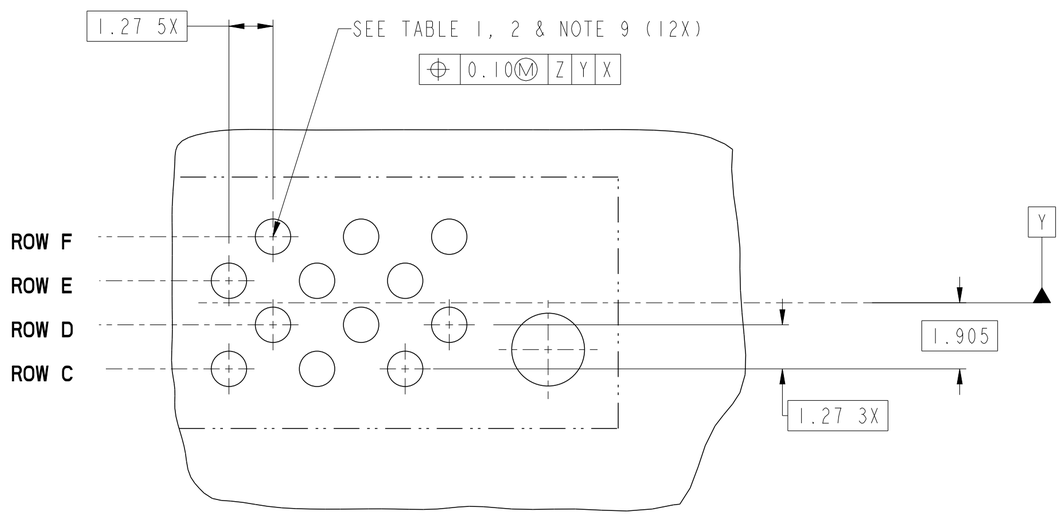

DETAIL K
SCALE 8:1

RECOMMENDED PCB LAYOUT
VIEWED FROM CONNECTOR SIDE

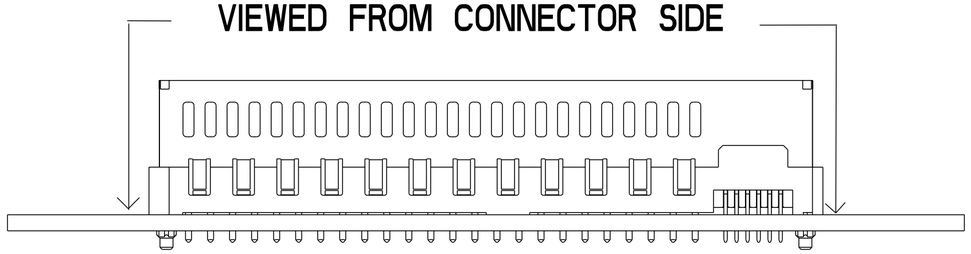

dr	Wei-Long Zhang	2011/07/25	projection	MM	size A2 / scale 4:1
eng	Wei-Long Zhang	2011/09/07			ecn no -
chr	Jon Qin	2011/09/07			
appr	Pei-Ming Zheng	2011/09/08	product family	CARD EDGE	rel level Released
title	VERT RECT (48P 12S) HIGH POWER CARD EDGE		dwg no	10118807	rev A
www.fci.com	cat. no. -		Product - Customer Drw		sheet 2 of 4

Copyright FCI.

Downloaded from Arrow.com.

CONTACT TYPE	TOP LAYER DESCRIPTION	TABLE 1 (HPCE / SOLDER TAILS) PLATED THROUGH-HOLE REQUIREMENTS				
		DRILLED HOLE DIAMETER	COPPER THICKNESS	TIN-LEAD THICKNESS	TIN THICKNESS	FINISHED HOLE DIAMETER
POWER & SIGNAL	TIN-LEAD	1.10-1.16 (1.15 DRILL)	0.025 - 0.050	0.005 - 0.015	--	0.94 - 1.10
	IMMERSION TIN	1.10-1.16 (1.15 DRILL)	0.025 - 0.050	--	0.9 - 1.5um	0.94 - 1.10
	COPPER (SEE NOTE 8)	1.10-1.16 (1.15 DRILL)	0.025 - 0.050	--	--	0.94 - 1.10

CONTACT TYPE	TOP LAYER DESCRIPTION	TABLE 2 (HPCE / PRESS-FIT TAILS) PLATED THROUGH-HOLE REQUIREMENTS				
		DRILLED HOLE DIAMETER	COPPER THICKNESS	TIN-LEAD THICKNESS	TIN THICKNESS	FINISHED HOLE DIAMETER
POWER & SIGNAL	TIN-LEAD	0.81-0.86 (0.85 DRILL)	0.025 - 0.050	0.005 - 0.015	--	0.65 - 0.80
	IMMERSION TIN	0.81-0.86 (0.85 DRILL)	0.025 - 0.050	--	0.9 - 1.5um	0.70 - 0.80
	COPPER (SEE NOTE 8)	0.81-0.86 (0.85 DRILL)	0.025 - 0.050	--	--	0.70 - 0.80

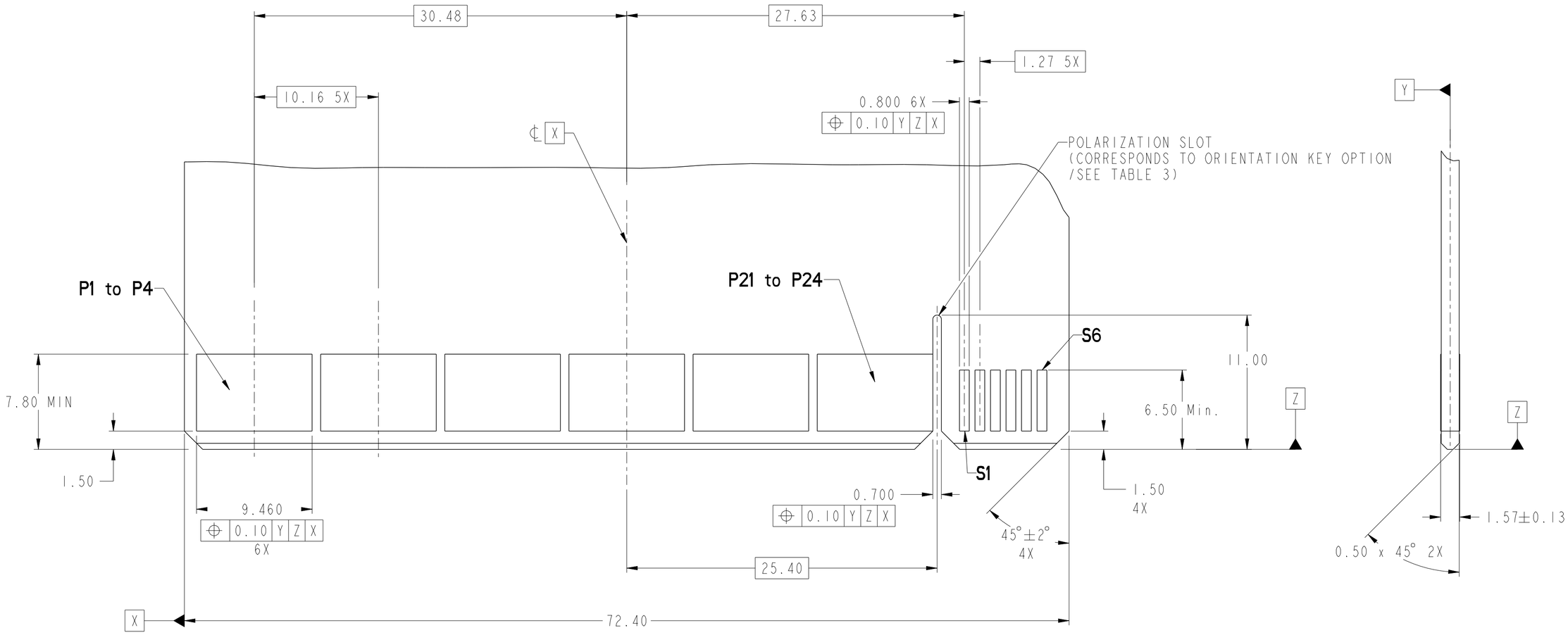

RECOMMENDED MATING BOARD
FOOTPRINT

dr	Wei-Long Zhang	2011/07/25	projection	MM	size A2 / scale 4:1
eng	Wei-Long Zhang	2011/09/07			
chr	Jon Qin	2011/09/07			ecn no -
appr	Pei-Ming Zheng	2011/09/08	product family	CARD EDGE	rel level Released
title	VERT RECT (48P 12S) HIGH POWER CARD EDGE		dwg no	10118807	rev A
www.fci.com	cat. no. -		Product - Customer Drw		sheet 3 of 4

Copyright FCI.

Downloaded from Arrow.com.

HPCE PART NUMBER (TABLE 3)

PART NUMBER	TAIL TYPE	ORIENTATION KEY	DIM "A" TYPICAL TAIL LENGTH	DIM "B" RECOMMENDED BOARD THICKNESS
10118807-001LF	SOLDER	YES	3.17 ±0.25	1.59 - 2.38
10118807-002LF	SOLDER	NO		
10118807-003	PRESS-FIT	YES	3.17 ±0.25	1.57 MIN
10118807-003LF	PRESS-FIT	YES		
10118807-004	PRESS-FIT	NO		
10118807-004LF	PRESS-FIT	NO		

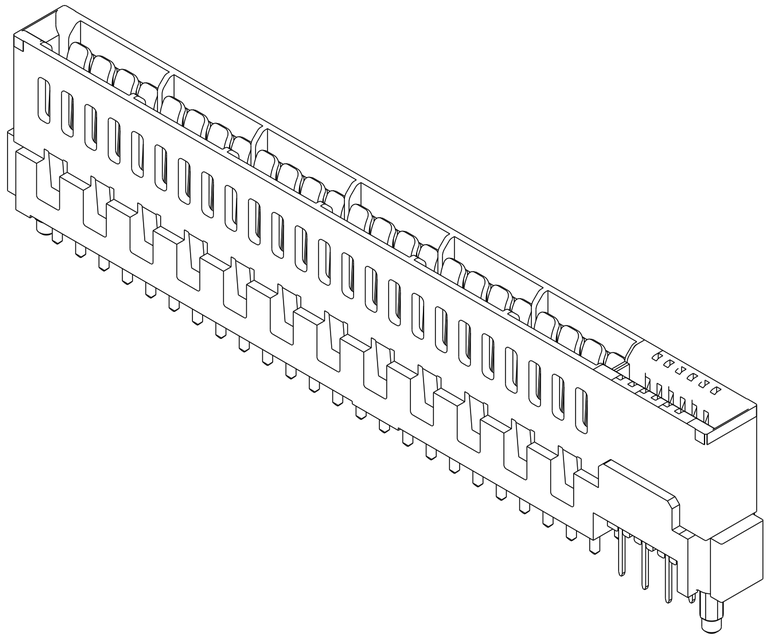

NOTES:

1. CONNECTOR MATERIALS:

   HOUSING: HIGH TEMPERATURE THERMAL PLASTIC, BLACK
   UL 94V-0 COMPLIANT
   CONTACTS: HIGH PERFORMANCE COPPER ALLOY.

2. CONTACT FINISH REF. GS-12-604 SECTION 5.2.

3. PRODUCT SPECIFICATION: GS-12-604.

4. APPLICATION SPECIFICATION: GS-20-128.

5. PRODUCT MARKING (FCI - PART NUMBER & DATE CODE) ON HOUSING IN AREA SHOWN.

6. PACKAGING MEETS FCI SPECIFICATION GS-14-937.

7. HOUSING COMPONENT WILL WITHSTAND EXPOSURE TO 260°C PEAK TEMPERATURE FOR 60 SECONDS IN A CONVECTION, INFRA-RED, OR VAPOR PHASE REFLOW OVEN.

8. COPPER PLATING THICKNESS IN CENTER OF VIA-HOLE CAN BE NO MORE THAN 0.003 LESS THAN OTHER AREAS.

9. ALL HOLE SIZES ARE FINISHED HOLE SIZES.

10. MOUNTING HOLES ARE UNPLATED
    ∅ 2.40 +/- 0.1 FOR PRESS-FIT TAILS
    ∅ 2.10 +/- 0.1 FOR SOLDER TAILS

dr	Wei-Long Zhang	2011/07/25	projection	MM	size A2	scale 4:1
eng	Wei-Long Zhang	2011/09/07			ecn no	-
chr	Jon Qin	2011/09/07				
appr	Pei-Ming Zheng	2011/09/08	product family	CARD EDGE	rel level	Released
title	VERT RECT (48P 12S) HIGH POWER CARD EDGE		dwg no	10118807	rev	A
www.fci.com	cat. no. -		Product - Customer Drw		sheet 4 of 4	

Copyright FCI.

Downloaded from Arrow.com.