TRS3232E 3V to 5.5V Multichannel RS-232 Line Driver and Receiver With ±15kV IEC ESD Protection In Small Package

1 Features

- ESD protection for RS-232 bus pins
  - ±15kV (HBM)
  - ±8kV (IEC61000-4-2, Contact discharge)
  - ±15kV (IEC61000-4-2, Air-gap discharge)
- Meets or exceeds the requirements of TIA/EIA-232-F and ITU V.28 standards
- Operates with 3V to 5.5V V_{CC} supply
  - Interoperable with RS-232 down to 2.7V V_{CC}
- Operates up to 250kbps
- Two drivers and two receivers
- Low supply current: 300µA (typical)
- External capacitors: 4 × 0.1µF
- Accepts 5V logic input with 3.3V supply
- Available in near chip-scale package (QFN-16, 3mm x 3mm), 85% smaller than SOIC-16
- Pin compatible to alternative high-speed devices (1Mbps)
  - SN65C3232E (–40°C to +85°C)
  - SN75C3232E (0°C to 70°C)

2 Applications

- Industrial PCs
- Wired networking
- Data center and enterprise computing
- Battery-powered systems
- Notebooks
- Palmtop PCs
- Hand-held equipment

3 Description

The TRS3232E device consists of two line drivers, two-line receivers, and a dual charge-pump circuit with ±15kV IEC ESD protection pin to pin (serial-port connection pins, including GND).

The device meets the requirements of TIA/EIA-232-F and provides the electrical interface between an asynchronous communication controller and the serial-port connector. The charge pump and four small external capacitors allow operation from a single 3V to 5.5V supply. The devices operate at data signaling rates up to 250kbps and a maximum of 30V/µs driver output slew rate.

Package Information

PART NUMBER	PACKAGE(1)	PACKAGE SIZE(2)
TRS3232E	SOIC (D, 16)	9.9mm × 6mm
	SSOP (DB, 16)	6.2mm × 7.8mm
	SOIC (DW, 16)	10.3mm × 10.3mm
	TSSOP (PW, 16)	5mm × 6.4mm
	VQFN (RGT, 16)	3mm x 3mm
	SOT-23-THN (DYY, 16)	4.2mm × 2mm

(1) For more information, see Section 11 .
(2) The package size (length × width) is a nominal value and includes pins, where applicable.

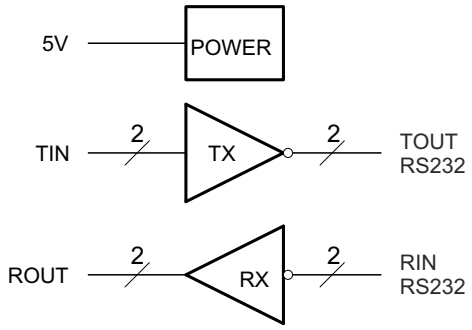

Simplified Diagram

An IMPORTANT NOTICE at the end of this data sheet addresses availability, warranty, changes, use in safety-critical applications, intellectual property matters and other important disclaimers. PRODUCTION DATA.

Downloaded from Arrow.com.

Table of Contents

1 Features....1
2 Applications....1
3 Description....1
4 Pin Configuration and Functions....3
5 Specifications....4
5.1 Absolute Maximum Ratings....4
5.2 ESD Ratings....4
5.3 ESD Ratings - IEC Specifications....4
5.4 Recommended Operating Conditions....5
5.5 Thermal Information....5
5.6 Electrical Characteristics — Device....6
5.7 Electrical Characteristics — Driver....6
5.8 Electrical Characteristics — Receiver....7
5.9 Switching Characteristics....7
6 Parameter Measurement Information....10
7 Detailed Description....11
7.1 Overview....11
7.2 Functional Block Diagram....11
7.3 Feature Description....11
7.4 Device Functional Modes....12
8 Application and Implementation....13
8.1 Application Information....13
8.2 Typical Application....13
8.3 Power Supply Recommendations....14
8.4 Layout....14
9 Device and Documentation Support....16
9.1 Receiving Notification of Documentation Updates....16
9.2 Support Resources....16
9.3 Trademarks....16
9.4 Electrostatic Discharge Caution....16
9.5 Glossary....16
10 Revision History....16
11 Mechanical, Packaging, and Orderable Information....17

Copyright © 2024 Texas Instruments Incorporated

Downloaded from Arrow.com.

4 Pin Configuration and Functions

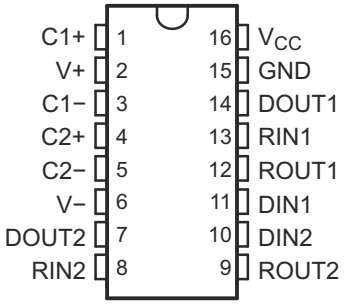

Figure 4-1. DB, PW or DYY Package 16-Pin SSOP, TSSOP, or SOT-23-THN (Top View)

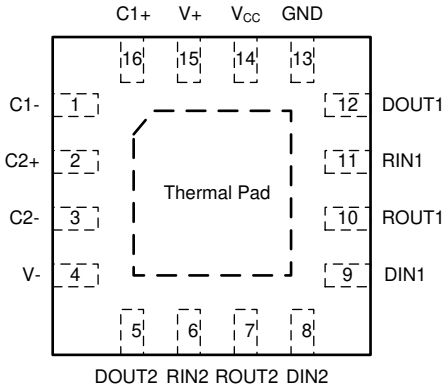

Figure 4-2. RGT package, 16 Pin VQFN, Top View

Table 4-1. Pin Functions

PIN			TYPE	DESCRIPTION
NAME	NO.	RGT		
C1+	1	16	—	Positive lead of C1 capacitor
C1–	3	1	—	Negative lead of C1 capacitor
C2+	4	2	—	Positive lead of C2 capacitor
C2–	5	3	—	Negative lead of C2 capacitor
DIN1	11	9	I	Logic data input (from UART)
DIN2	10	8	I	Logic data input (from UART)
DOUT2	7	5	O	RS232 line data output (to remote RS232 system)
DOUT1	14	12	O	RS232 line data output (to remote RS232 system)
GND	15	13	—	Ground
RIN1	13	11	I	RS232 line data input (from remote RS232 system)
RIN2	8	6	I	RS232 line data input (from remote RS232 system)
ROUT2	9	7	O	Logic data output (to UART)
ROUT1	12	10	O	Logic data output (to UART)
V+	2	15	O	Positive charge pump output for storage capacitor only
V–	6	4	O	Negative charge pump output for storage capacitor only
V_{CC}	16	14	—	Supply voltage, connect to external 3-V to 5.5-V power supply
Thermal Pad		Yes	—	Thermal pad for improving heat dissipation. Can be connected to GND or left floating.

Copyright © 2024 Texas Instruments Incorporated

Downloaded from Arrow.com.

5 Specifications

5.1 Absolute Maximum Ratings

over operating free-air temperature range (unless otherwise noted)[1]

			MIN	MAX	UNIT
V_{CC}	Supply voltage[2]		–0.3	6	V
V+	Positive output supply voltage[2]		–0.3	7	V
V–	Negative output supply voltage[2]		0.3	–7	V
V+ – V–	Supply voltage difference[2]			13	V
V_I	Input voltage	Drivers	–0.3	6	V
		Receivers	–25	25	V
V_O	Output voltage	Drivers	–13.2	13.2	V
		Receivers	–0.3	V_{CC} + 0.3	V
T_J	Operating virtual junction temperature			150	°C
T_{stg}	Storage temperature		–65	150	°C

(1) Stresses beyond those listed under *Absolute Maximum Ratings* may cause permanent damage to the device. These are stress ratings only, and functional operation of the device at these or any other conditions beyond those indicated under *Recommended Operating Conditions* is not implied. Exposure to absolute-maximum-rated conditions for extended periods may affect device reliability.
(2) All voltages are with respect to network GND.

5.2 ESD Ratings

				VALUE	UNIT
$V_{(ESD)}$	Electrostatic discharge	Human body model (HBM), per ANSI/ESDA/JEDEC JS-001[1]	All pins except RIN1, RIN2, DOUT1 and DOUT2	±2000	V
			Pins RIN1, RIN2, DOUT1 and DOUT2	±15000	
		Charged-device model (CDM), per JEDEC specification JESD22-C101[2]	All pins	±1500	

(1) JEDEC document JEP155 states that 500-V HBM allows safe manufacturing with a standard ESD control process.
(2) JEDEC document JEP157 states that 250-V CDM allows safe manufacturing with a standard ESD control process.

5.3 ESD Ratings - IEC Specifications

				VALUE	UNIT
$V_{(ESD)}$	Electrostatic discharge	IEC 61000-4-2, Contact Discharge[1]	Pins RIN1, RIN2, DOUT1, DOUT2[2]	±8000	V
		IEC 61000-4-2, Air-Gap Discharge[1]	Pins RIN1, RIN2, DOUT1, DOUT2[2]	±15000	

(1) For RGT, D, DB and PW packages only: Minimum of 1-μF capacitor between VCC and GND is required to meet the specified IEC 61000-4-2 rating.
(2) For optimized IEC ESD performance for DYY package, the recommendation is to have series resistor (≥ 50Ω), on all logic inputs directly connected to power or ground, to minimize the transient currents going into or out of the logic pins.

Copyright © 2024 Texas Instruments Incorporated

Downloaded from Arrow.com.

5.4 Recommended Operating Conditions

See Figure 8-1.[1]

				MIN	NOM	MAX	UNIT
	Supply voltage		V_{CC} = 3.3 V	3	3.3	3.6	V
			V_{CC} = 5 V	4.5	5	5.5	
V_{IH}	Driver high-level input voltage	DIN	V_{CC} = 3.3 V	2		5.5	V
			V_{CC} = 5 V	2.4		5.5	
V_{IL}	Driver low-level input voltage	DIN		0		0.8	V
V_I	Receiver input voltage	RIN		–25		25	V
T_A	Operating free-air temperature		TRS3232EC	0		70	°C
			TRS3232EI	–40		85	

(1) C1–C4 = 0.1 µF at V_{CC} = 3.3 V ± 0.3 V; C1 = 0.047 µF, C2–C4 = 0.33 µF at V_{CC} = 5 V ± 0.5 V.

5.5 Thermal Information

THERMAL METRIC[1]		TRS3232E						UNIT
		PW (TSSOP)	D (SOIC)	DW (SOIC)	DB (SSOP)	RGT (VQFN)	DYY (SOT-23-THN)	
		16 PINS	16 PINS	16 PINS	16 PINS	16 PINS	16 PINS	
$R_{\theta JA}$	Junction-to-ambient thermal resistance	108.2	85.9	72.3	103.1	48.8	106.2	°C/W
$R_{\theta JCtop}$	Junction-to-case (top) thermal resistance	39.0	43.1	33.5	49.2	55.8	47.4	°C/W
$R_{\theta JB}$	Junction-to-board thermal resistance	54.4	44.5	37.1	54.8	23.2	44.7	°C/W
Ψ_{JT}	Junction-to-top characterization parameter	3.3	10.1	7.5	12.0	1.7	1.7	°C/W
Ψ_{JB}	Junction-to-board characterization parameter	53.8	44.1	37.1	54.1	23.2	43.7	°C/W
$R_{\theta JCbot}$	Junction-to-case (bottom) thermal resistance	N/A	N/A	N/A	N/A	9.0	N/A	°C/W

(1) For more information about traditional and new thermal metrics, see the *Semiconductor and IC Package Thermal Metrics* application report, SPRA953.

Copyright © 2024 Texas Instruments Incorporated

Downloaded from Arrow.com.

5.6 Electrical Characteristics — Device

over recommended ranges of supply voltage and operating free-air temperature (unless otherwise noted) (see Figure 8-1).[1]

PARAMETER		TEST CONDITIONS	MIN	TYP[2]	MAX	UNIT
I_{CC}	Supply current	No load, V_{CC} = 3.3 V or 5 V		0.3	1	mA

(1) Test conditions are C1–C4 = 0.1 µF at V_{CC} = 3.3 V ± 0.3 V; C1 = 0.047 µF, C2–C4 = 0.33 µF at V_{CC} = 5 V ± 0.5 V.
(2) All typical values are at V_{CC} = 3.3 V or V_{CC} = 5 V, and T_A = 25°C.

5.7 Electrical Characteristics — Driver

over operating free-air temperature range (unless otherwise noted) (see Figure 8-1).[1]

PARAMETER		TEST CONDITIONS		MIN	TYP[2]	MAX	UNIT
V_{OH}	High-level output voltage	DOUT at R_L = 3 kΩ to GND,	DIN = GND	5	5.4		V
V_{OL}	Low-level output voltage	DOUT at R_L = 3 kΩ to GND,	DIN = V_{CC}	–5	–5.4		V
I_{IH}	High-level input current	V_I = V_{CC}			±0.01	±1	µA
I_{IL}	Low-level input current	V_I at GND			±0.01	±1	µA
I_{OS} [3]	Short-circuit output current	V_{CC} = 3.6 V,	V_O = 0 V		±35	±60	mA
		V_{CC} = 5.5 V,	V_O = 0 V				
r_O	Output resistance	V_{CC}, V+, and V– = 0 V,	V_O = ±2 V	300	10M		Ω

(1) Test conditions are C1–C4 = 0.1 µF at V_{CC} = 3.3 V ± 0.3 V; C1 = 0.047 µF, C2–C4 = 0.33 µF at V_{CC} = 5 V ± 0.5 V.
(2) Short-circuit durations should be controlled to prevent exceeding the device absolute power dissipation ratings, and not more than one output should be shorted at a time.
(3) All typical values are at V_{CC} = 3.3 V or V_{CC} = 5 V, and T_A = 25°C.

Copyright © 2024 Texas Instruments Incorporated

Downloaded from Arrow.com.

5.8 Electrical Characteristics — Receiver

over recommended ranges of supply voltage and operating free-air temperature (unless otherwise noted) (see Figure 8-1).[2]

PARAMETER		TEST CONDITIONS	MIN	TYP[1]	MAX	UNIT
V_{OH}	High-level output voltage	I_{OH} = –1 mA	V_{CC} – 0.6	V_{CC} – 0.1		V
V_{OL}	Low-level output voltage	I_{OL} = 1.6 mA			0.4	V
V_{IT+}	Positive-going input threshold voltage	V_{CC} = 3.3 V		1.5	2.4	V
		V_{CC} = 5 V		1.8	2.4	
V_{IT-}	Negative-going input threshold voltage	V_{CC} = 3.3 V	0.6	1.2		V
		V_{CC} = 5 V	0.8	1.5		
V_{hys}	Input hysteresis (V_{IT+} – V_{IT-})			0.3		V
r_i	Input resistance	V_I = ±3 V to ±25 V	3	5	7	kΩ

(1) All typical values are at V_{CC} = 3.3 V or V_{CC} = 5 V, and T_A = 25°C.
(2) Test conditions are C1–C4 = 0.1 µF at V_{CC} = 3.3 V ± 0.3 V; C1 = 0.047 µF, C2–C4 = 0.33 µF at V_{CC} = 5 V ± 0.5 V.

5.9 Switching Characteristics

over recommended ranges of supply voltage and operating free-air temperature (unless otherwise noted) (see Figure 8-1)[1]

PARAMETER		TEST CONDITIONS		MIN	TYP[2]	MAX	UNIT
	Maximum data rate	R_L = 3 kΩ, C_L = 1000 pF, see Figure 6-1 One DOUT switching,	RGT package	250	500		kbps
			D, DB, DW and PW packages	150	250		
$t_{sk(p)}$	Driver pulse skew[3]	R_L = 3 kΩ, C_L = 1000 pF, V_{CC} = 5 V Figure 6-2	RGT package		50		ns
		R_L = 3 kΩ to 7 kΩ, C_L = 150 pF to 2500 pF see Figure 6-2	D, DB, DW and PW packages		300		
SR(tr)	Driver slew rate, transition region (see Figure 6-1)	R_L = 3 kΩ to 7 kΩ, V_{CC} = 3.3 V	C_L = 150 pF to 1000 pF	6		30	V/µs
			C_L = 150 pF to 2500 pF	4		30	
t_{PLH}	Receiver propagation delay time, low- to high-level output	C_L = 150 pF, see Figure 6-3	RGT package		90		ns
			D, DB, DW and PW packages		300		
t_{PHL}	Receiver propagation delay time, high- to low-level output	C_L = 150 pF, see Figure 6-3	RGT package		100		ns
			D, DB, DW and PW packages		300		
$t_{sk(p)}$	Receiver pulse skew[3]	RGT package			20		ns
		D, DB, DW and PW packages			300		

(1) Test conditions are C1–C4 = 0.1 µF at V_{CC} = 3.3 V ± 0.3 V; C1 = 0.047 µF, C2–C4 = 0.33 µF at V_{CC} = 5 V ± 0.5 V.
(2) All typical values are at V_{CC} = 3.3 V or V_{CC} = 5 V, and T_A = 25°C.
(3) Pulse skew is defined as $|t_{PLH} – t_{PHL}|$ of each channel of the same device.

Copyright © 2024 Texas Instruments Incorporated

Downloaded from Arrow.com.

Typical Characteristics

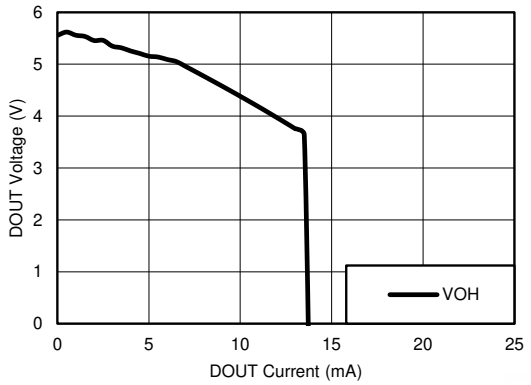

V_{CC} = 3.3V

Figure 5-1. DOUT V_{OH} vs Load Current, Both Drivers Loaded

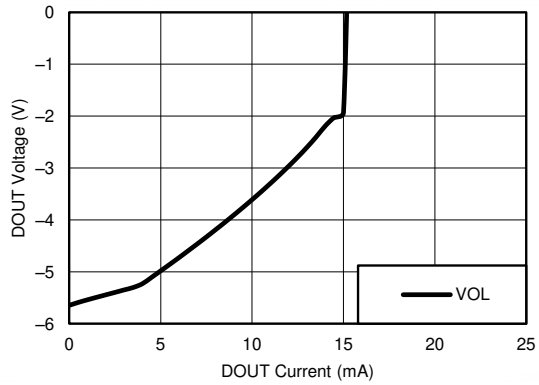

V_{CC} = 3.3V

Figure 5-2. DOUT V_{OL} vs Load Current, Both Drivers Loaded

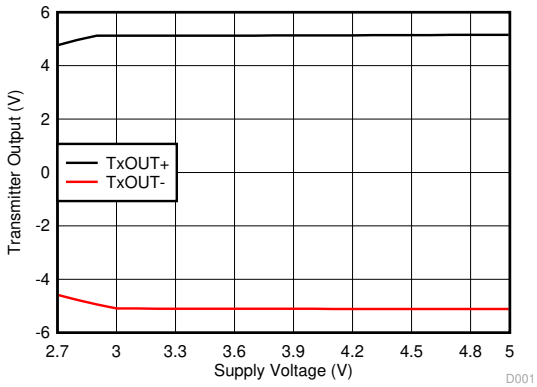

TX1 at 250kbps TX2 at 15.6kbps

Both TX loaded 3kΩ and 100pF

Figure 5-3. Driver Output Voltage vs. Supply Voltage, Both Drivers Loaded

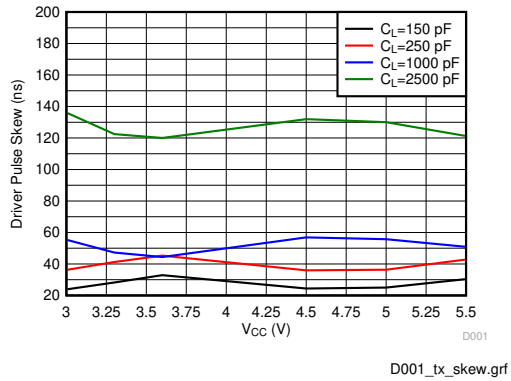

Figure 5-4. Driver Pulse Skew (RGT Package)

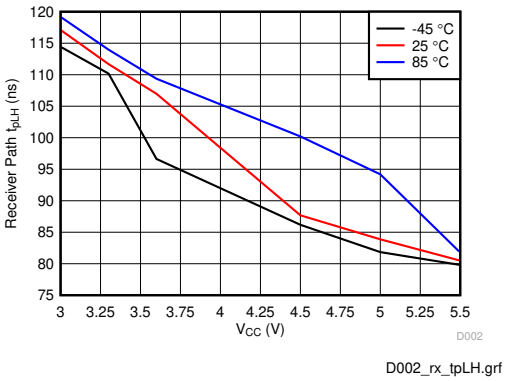

Figure 5-5. Receiver Path Low-to-High Propagation Delay (RGT Package)

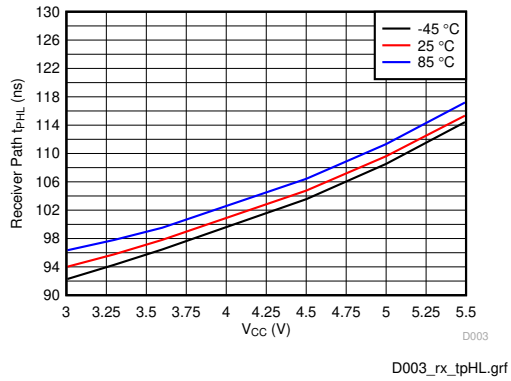

Figure 5-6. Receiver Path High-to-Low Propagation Delay (RGT Package)

Copyright © 2024 Texas Instruments Incorporated

Downloaded from Arrow.com.

Typical Characteristics

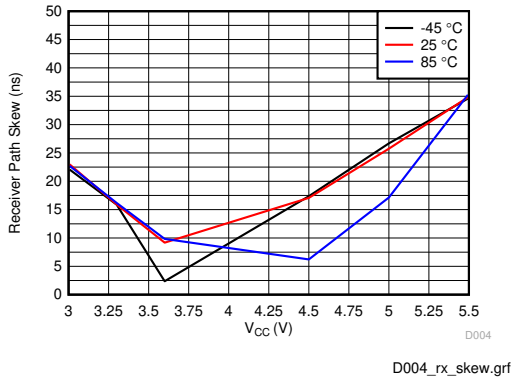

Figure 5-7. Receiver Path Skew ($|t_{pHL}-t_{pLH}|$) (RGT Package)

Downloaded from Arrow.com.

6 Parameter Measurement Information

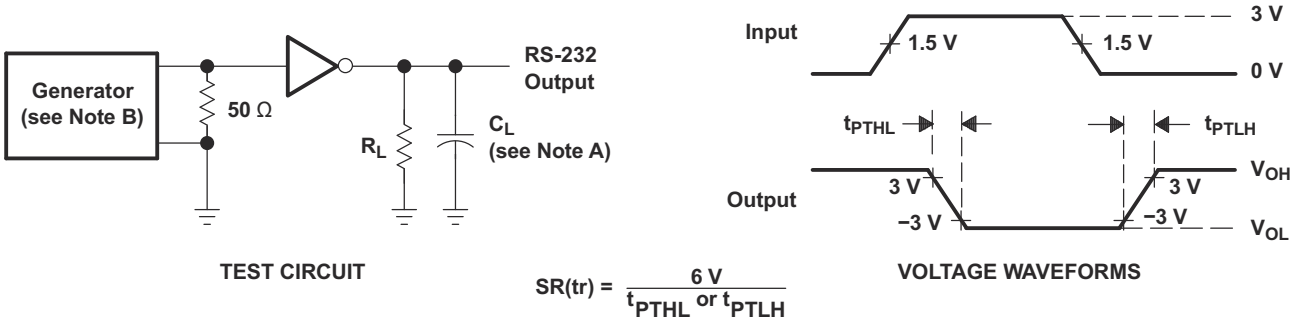

$$SR(tr) = \frac{6\ V}{t_{PTHL}\ \text{or}\ t_{PTLH}}$$

A. C_L includes probe and jig capacitance

B. The pulse generator has the following characteristics: PRR = 250 kbps, Z_O = 50 Ω, 50% duty cycle, t_r ≤ 10 ns, t_f ≤ 10 ns

Figure 6-1. Driver Slew Rate

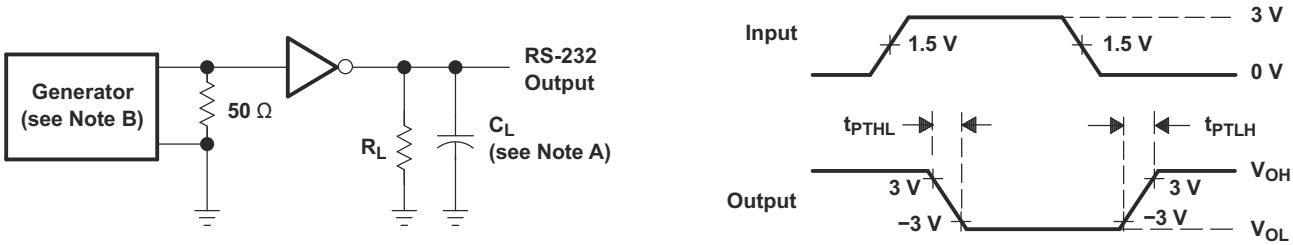

$$SR(tr) = \frac{6\ V}{t_{PTHL}\ \text{or}\ t_{PTLH}}$$

A. C_L includes probe and jig capacitance

B. The pulse generator has the following characteristics: PRR = 250 kbps, Z_O = 50 Ω, 50% duty cycle, t_r ≤ 10 ns, t_f ≤ 10 ns

Figure 6-2. Driver Pulse Skew

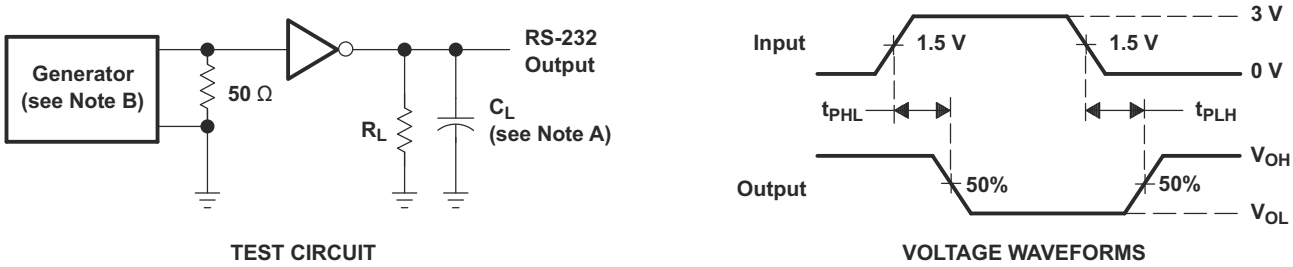

A. C_L includes probe and jig capacitance

B. The pulse generator has the following characteristics: Z_O = 50 Ω, 50% duty cycle, t_r ≤ 10 ns, t_f ≤ 10 ns

Figure 6-3. Receiver Propagation Delay Times

Copyright © 2024 Texas Instruments Incorporated

Downloaded from Arrow.com.

7 Detailed Description

7.1 Overview

The TRS3232E device consists of two line drivers, two-line receivers, and a dual charge-pump circuit with IEC61000-4-2 ESD protection terminal to terminal (serial-port connection terminals, including GND). The device meets the requirements of TIA/EIA-232-F and provides the electrical interface between an asynchronous communication controller and the serial-port connector. The charge pump and four small external capacitors allow operation from a single 3V to 5.5V supply. The device operates at data signaling rates up to 250kbps and a maximum of 30V/µs driver output slew rate. Outputs are protected against shorts to ground.

7.2 Functional Block Diagram

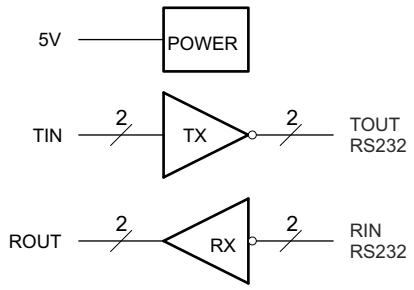

7.3 Feature Description

7.3.1 Power

The power block increases, inverts, and regulates voltage at V+ and V– pins using a charge pump that requires four external capacitors.

7.3.2 RS232 Driver

Two drivers interface standard logic level to RS232 levels. Both DIN inputs must be valid high or low.

7.3.3 RS232 Receiver

Two receivers interface RS232 levels to standard logic levels. An open input will result in a high output on ROUT. Each RIN input includes an internal standard RS232 load.

Downloaded from Arrow.com.

7.4 Device Functional Modes

Table 7-1 and Table 7-2 list the functional modes of the drivers and receivers of TRS3232E.

Table 7-1. Each Driver (1)

INPUT DIN	OUTPUT DOUT
L	H
H	L

(1) H = high level, L = low level

Table 7-2. Each Receiver (1)

INPUT RIN	OUTPUT ROUT
L	H
H	L
Open	H

(1) H = high level, L = low level,
Open = input disconnected or connected driver off

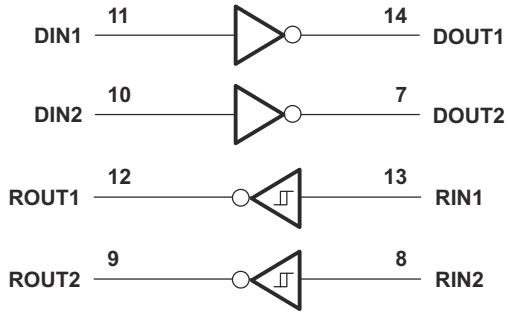

Figure 7-1. Logic Diagram

7.4.1 V_{CC} Powered by 3V to 5.5V

The device is in normal operation.

7.4.2 V_{CC} Unpowered, V_{CC} = 0V

When TRS3232E is unpowered, it can be safely connected to an active remote RS232 device.

Copyright © 2024 Texas Instruments Incorporated

Downloaded from Arrow.com.

8 Application and Implementation

Note

Information in the following applications sections is not part of the TI component specification, and TI does not warrant its accuracy or completeness. TI's customers are responsible for determining suitability of components for their purposes, as well as validating and testing their design implementation to confirm system functionality.

8.1 Application Information

The TRS3232E interfaces logic lines from a UART or microcontroller to the voltage and current levels needed for RS232 communication. The TIN inputs will accept 5V logic with 3.3V V_{CC} supply. All baud rates up to 250kbps are supported.

It is important to use the correct capacitors for the VCC voltage. This will reduce ripple voltage on the TOUT outputs. If only one driver is needed, the unused driver input should be connected to V_{CC} or ground.

8.2 Typical Application

ROUT and DIN connect to UART or general-purpose logic lines. RIN and DOUT lines connect to a RS232 connector or cable. For proper operation, add capacitors as shown in Table 8-1.

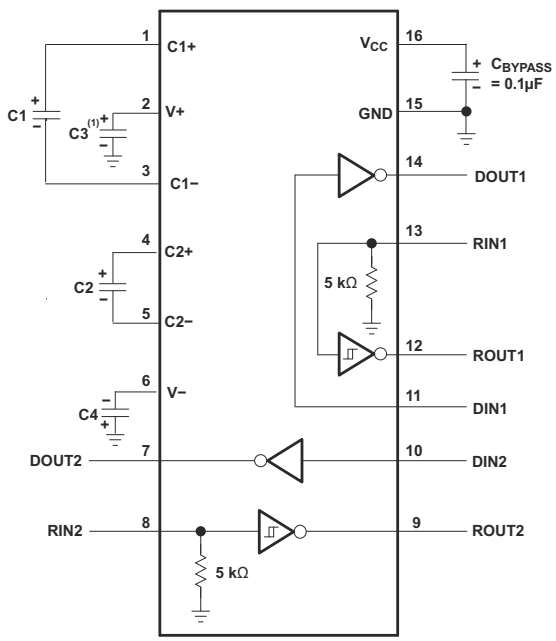

A. C3 can be connected to V_{CC} or GND
Resistor values shown are nominal.
Nonpolorized ceramic capacitors are acceptable. If polarized tantalum or electrolytic capacitors are used, they should be connected as shown.

Figure 8-1. Typical Operating Circuit and Capacitor Values

Table 8-1. V_{CC} vs Capacitor Values

V_{CC}	C1	C2, C3, C4
3.3V ± 0.3V	0.1µF	0.1µF
5V ± 0.5V	0.047µF	0.33µF
3V ± 5.5V	0.1µF	0.47µF

Downloaded from Arrow.com.

8.2.1 Design Requirements

The recommended V_{CC} is 3.3V or 5V. 3V to 5.5V is also possible.

The maximum recommended bit rate is 250kbps.

8.2.2 Detailed Design Procedure

All DIN inputs must be connected to valid low or high logic levels.

Select capacitor values based on V_{CC} level for best performance.

8.2.3 Application Curve

Figure 8-2 curves are for 3.3V VCC and 250kbps alternative bit data stream.

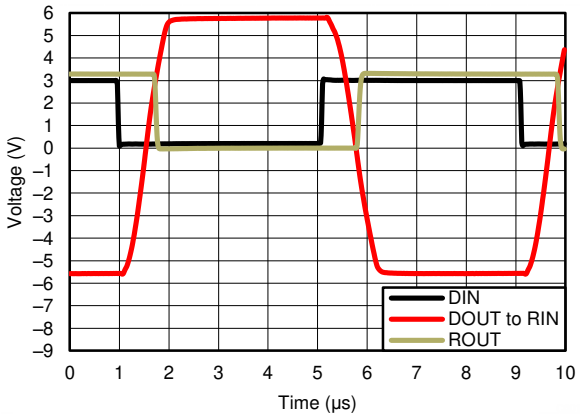

Figure 8-2. 250kbps Driver to Receiver Loopback Timing Waveform, V_{CC}= 3.3V

8.3 Power Supply Recommendations

The supply voltage, V_{CC}, should be between 3V and 5.5V. Select the values of the charge-pump capacitors using Table 8-1.

8.4 Layout

8.4.1 Layout Guidelines

Keep the external capacitor traces short, specifically on the C1 and C2 nodes that have the fastest rise and fall times.

Copyright © 2024 Texas Instruments Incorporated

Downloaded from Arrow.com.

8.4.2 Layout Example

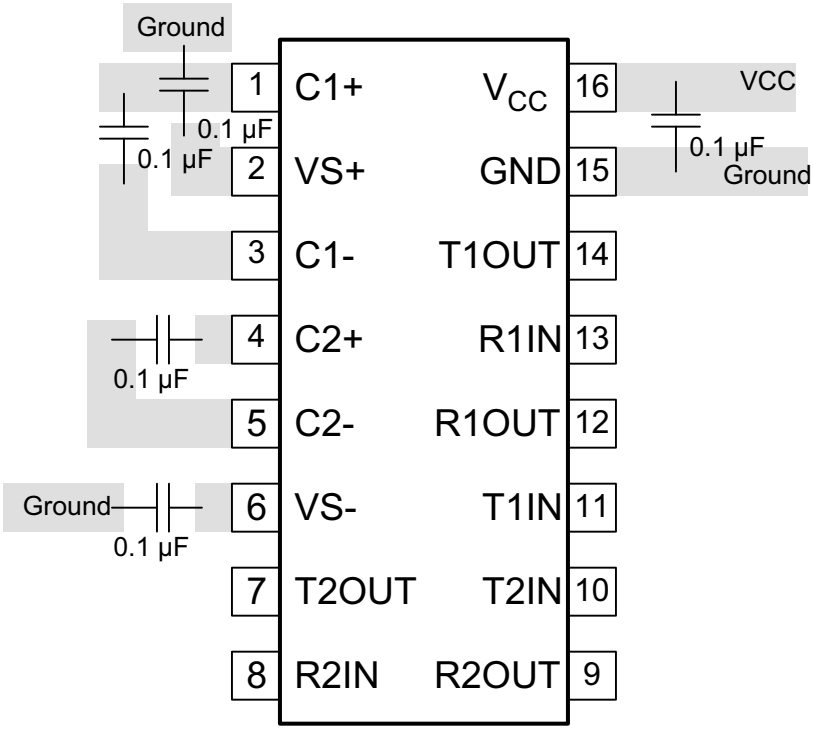

Figure 8-3. Layout Diagram

Downloaded from Arrow.com.

9 Device and Documentation Support

9.1 Receiving Notification of Documentation Updates

To receive notification of documentation updates, navigate to the device product folder on ti.com. Click on *Notifications* to register and receive a weekly digest of any product information that has changed. For change details, review the revision history included in any revised document.

9.2 Support Resources

TI E2E™ support forums are an engineer's go-to source for fast, verified answers and design help — straight from the experts. Search existing answers or ask your own question to get the quick design help you need.

Linked content is provided "AS IS" by the respective contributors. They do not constitute TI specifications and do not necessarily reflect TI's views; see TI's Terms of Use.

9.3 Trademarks

TI E2E™ is a trademark of Texas Instruments.
All trademarks are the property of their respective owners.

9.4 Electrostatic Discharge Caution

This integrated circuit can be damaged by ESD. Texas Instruments recommends that all integrated circuits be handled with appropriate precautions. Failure to observe proper handling and installation procedures can cause damage.

ESD damage can range from subtle performance degradation to complete device failure. Precision integrated circuits may be more susceptible to damage because very small parametric changes could cause the device not to meet its published specifications.

9.5 Glossary

TI Glossary	This glossary lists and explains terms, acronyms, and definitions.

10 Revision History

NOTE: Page numbers for previous revisions may differ from page numbers in the current version.

Changes from Revision D (June 2021) to Revision E (December 2024)	Page
• Changed the *Device Information* table to the *Package Information* table	1
• Added the SOT-23-THN (DYY) package to the data sheet	1
• Added Note 2 to the *ESD ratings - IEC Specifications*	4

Changes from Revision C (June 2021) to Revision D (June 2021)	Page
• Added *Applications*: Industrial PCs, Wired networking, and Data center and enterprise computing	1
• Changed the table note in the *ESD Ratings - IEC Specifications* to make it applicable to D, DB and PW packages.	4
• Changed the thermal parameter values for D, DB and PW packages in the *Thermal Information* table	5

Changes from Revision B (October 2017) to Revision C (June 2021)	Page
• Added RGT package to the *Device Information*	1
• Added the RGT *Pin Configuration*	3
• Added the *ESD Ratings - IEC Specifications*	4
• Added RGT to the *Thermal Information*	5
• Added RGT package to the *Switching Characteristics*	7
• Changed the capacitor value From: 1 µf To: 0.1 µf in the *Layout Diagram*	15

Copyright © 2024 Texas Instruments Incorporated

Downloaded from Arrow.com.

Changes from Revision A (July 2015) to Revision B (October 2017)	Page
• Added Feature: Interoperable with RS-232 down to 2.7-V V_{CC}	1
• Added Figure 5-3	8

Changes from Revision * (April 2007) to Revision A (July 2015)	Page
• Deleted *Ordering Information* table	1
• Added *Device Information* table, *Pin Configuration and Functions* section, *ESD Ratings* table, *Thermal Information* table, *Feature Description* section, *Device Functional Modes*, *Application and Implementation* section, *Power Supply Recommendations* section, *Layout* section, *Device and Documentation Support* section, and *Mechanical, Packaging, and Orderable Information* section	1

11 Mechanical, Packaging, and Orderable Information

The following pages include mechanical, packaging, and orderable information. This information is the most current data available for the designated devices. This data is subject to change without notice and revision of this document. For browser based versions of this data sheet, refer to the left hand navigation.

Downloaded from Arrow.com.

PACKAGING INFORMATION

Orderable Device	Status (1)	Package Type	Package Drawing	Pins	Package Qty	Eco Plan (2)	Lead finish/ Ball material (6)	MSL Peak Temp (3)	Op Temp (°C)	Device Marking (4/5)	Samples
TRS3232ECDR	ACTIVE	SOIC	D	16	2500	RoHS & Green	NIPDAU	Level-1-260C-UNLIM	0 to 70	TRS3232EC	Samples
TRS3232ECDW	OBSOLETE	SOIC	DW	16		TBD	Call TI	Call TI	0 to 70	TRS3232EC	
TRS3232ECDWR	ACTIVE	SOIC	DW	16	2000	RoHS & Green	NIPDAU	Level-1-260C-UNLIM	0 to 70	TRS3232EC	Samples
TRS3232ECPWR	ACTIVE	TSSOP	PW	16	2000	RoHS & Green	NIPDAU | SN	Level-1-260C-UNLIM	0 to 70	RS32EC	Samples
TRS3232EIDBR	ACTIVE	SSOP	DB	16	2000	RoHS & Green	NIPDAU	Level-1-260C-UNLIM	-40 to 85	RS32EI	Samples
TRS3232EIDR	ACTIVE	SOIC	D	16	2500	RoHS & Green	NIPDAU	Level-1-260C-UNLIM	-40 to 85	TRS3232EI	Samples
TRS3232EIDW	OBSOLETE	SOIC	DW	16		TBD	Call TI	Call TI	-40 to 85	TRS3232EI	
TRS3232EIDWR	OBSOLETE	SOIC	DW	16		TBD	Call TI	Call TI	-40 to 85	TRS3232EI	
TRS3232EIDYYR	ACTIVE	SOT-23-THIN	DYY	16	3000	RoHS & Green	NIPDAU	Level-1-260C-UNLIM	-40 to 85	RS32EI	Samples
TRS3232EIPWR	ACTIVE	TSSOP	PW	16	2000	RoHS & Green	NIPDAU	Level-1-260C-UNLIM	-40 to 85	RS32EI	Samples
TRS3232EIPWRG4	ACTIVE	TSSOP	PW	16	2000	RoHS & Green	NIPDAU	Level-1-260C-UNLIM	-40 to 85	RS32EI	Samples
TRS3232EIRGTR	ACTIVE	VQFN	RGT	16	3000	RoHS & Green	NIPDAU	Level-1-260C-UNLIM	-40 to 85	3232	Samples

(1) The marketing status values are defined as follows:
ACTIVE: Product device recommended for new designs.
LIFEBUY: TI has announced that the device will be discontinued, and a lifetime-buy period is in effect.
NRND: Not recommended for new designs. Device is in production to support existing customers, but TI does not recommend using this part in a new design.
PREVIEW: Device has been announced but is not in production. Samples may or may not be available.
OBSOLETE: TI has discontinued the production of the device.

(2) **RoHS:** TI defines "RoHS" to mean semiconductor products that are compliant with the current EU RoHS requirements for all 10 RoHS substances, including the requirement that RoHS substance do not exceed 0.1% by weight in homogeneous materials. Where designed to be soldered at high temperatures, "RoHS" products are suitable for use in specified lead-free processes. TI may reference these types of products as "Pb-Free".
RoHS Exempt: TI defines "RoHS Exempt" to mean products that contain lead but are compliant with EU RoHS pursuant to a specific EU RoHS exemption.
Green: TI defines "Green" to mean the content of Chlorine (Cl) and Bromine (Br) based flame retardants meet JS709B low halogen requirements of <=1000ppm threshold. Antimony trioxide based flame retardants must also meet the <=1000ppm threshold requirement.

(3) MSL, Peak Temp. - The Moisture Sensitivity Level rating according to the JEDEC industry standard classifications, and peak solder temperature.

Downloaded from Arrow.com.

(4) There may be additional marking, which relates to the logo, the lot trace code information, or the environmental category on the device.

(5) Multiple Device Markings will be inside parentheses. Only one Device Marking contained in parentheses and separated by a "~" will appear on a device. If a line is indented then it is a continuation of the previous line and the two combined represent the entire Device Marking for that device.

(6) Lead finish/Ball material - Orderable Devices may have multiple material finish options. Finish options are separated by a vertical ruled line. Lead finish/Ball material values may wrap to two lines if the finish value exceeds the maximum column width.

Important Information and Disclaimer: The information provided on this page represents TI's knowledge and belief as of the date that it is provided. TI bases its knowledge and belief on information provided by third parties, and makes no representation or warranty as to the accuracy of such information. Efforts are underway to better integrate information from third parties. TI has taken and continues to take reasonable steps to provide representative and accurate information but may not have conducted destructive testing or chemical analysis on incoming materials and chemicals. TI and TI suppliers consider certain information to be proprietary, and thus CAS numbers and other limited information may not be available for release.

In no event shall TI's liability arising out of such information exceed the total purchase price of the TI part(s) at issue in this document sold by TI to Customer on an annual basis.

OTHER QUALIFIED VERSIONS OF TRS3232E :

- Automotive : TRS3232E-Q1

NOTE: Qualified Version Definitions:

- Automotive - Q100 devices qualified for high-reliability automotive applications targeting zero defects

Downloaded from Arrow.com.

TAPE AND REEL INFORMATION

REEL DIMENSIONS

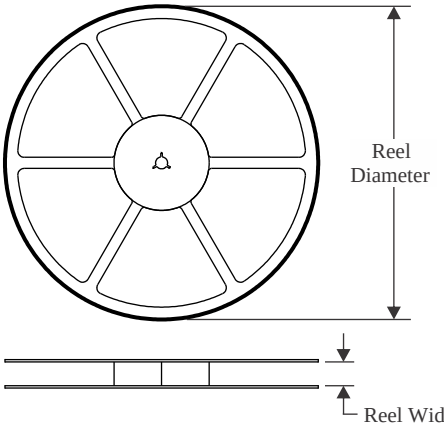

TAPE DIMENSIONS

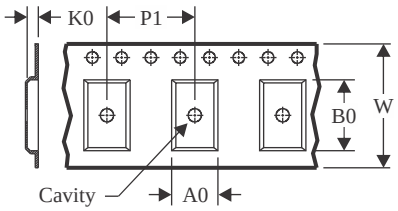

A0	Dimension designed to accommodate the component width
B0	Dimension designed to accommodate the component length
K0	Dimension designed to accommodate the component thickness
W	Overall width of the carrier tape
P1	Pitch between successive cavity centers

QUADRANT ASSIGNMENTS FOR PIN 1 ORIENTATION IN TAPE

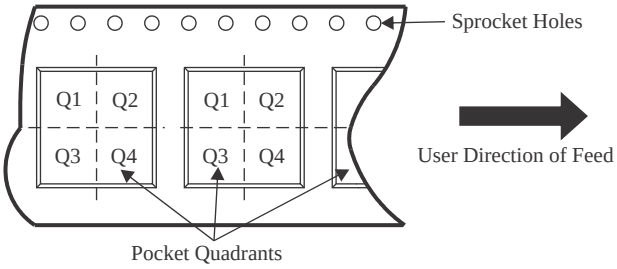

*All dimensions are nominal

Device	Package Type	Package Drawing	Pins	SPQ	Reel Diameter (mm)	Reel Width W1 (mm)	A0 (mm)	B0 (mm)	K0 (mm)	P1 (mm)	W (mm)	Pin1 Quadrant
TRS3232ECDR	SOIC	D	16	2500	330.0	16.4	6.5	10.3	2.1	8.0	16.0	Q1
TRS3232ECDWR	SOIC	DW	16	2000	330.0	16.4	10.75	10.7	2.7	12.0	16.0	Q1
TRS3232ECPWR	TSSOP	PW	16	2000	330.0	12.4	6.9	5.6	1.6	8.0	12.0	Q1
TRS3232ECPWR	TSSOP	PW	16	2000	330.0	12.4	6.9	5.6	1.6	8.0	12.0	Q1
TRS3232EIDBR	SSOP	DB	16	2000	330.0	16.4	8.35	6.6	2.4	12.0	16.0	Q1
TRS3232EIDR	SOIC	D	16	2500	330.0	16.4	6.5	10.3	2.1	8.0	16.0	Q1
TRS3232EIDYYR	SOT-23-THIN	DYY	16	3000	330.0	12.4	4.8	3.6	1.6	8.0	12.0	Q3
TRS3232EIPWR	TSSOP	PW	16	2000	330.0	12.4	6.9	5.6	1.6	8.0	12.0	Q1
TRS3232EIPWR	TSSOP	PW	16	2000	330.0	12.4	6.9	5.6	1.6	8.0	12.0	Q1
TRS3232EIRGTR	VQFN	RGT	16	3000	330.0	12.4	3.3	3.3	1.1	8.0	12.0	Q2

Downloaded from Arrow.com.

TAPE AND REEL BOX DIMENSIONS

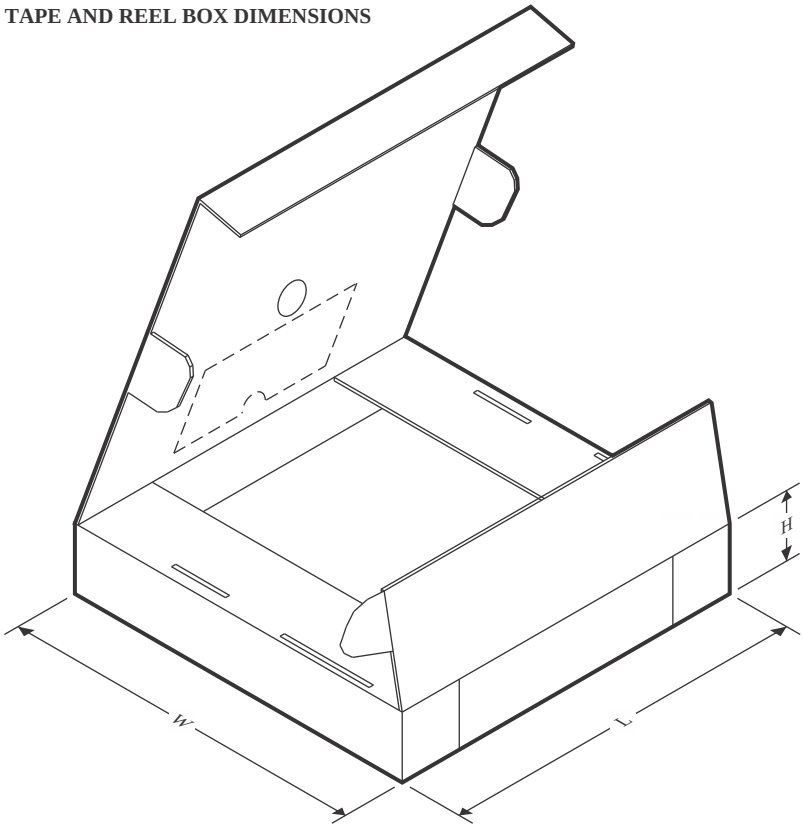

*All dimensions are nominal

Device	Package Type	Package Drawing	Pins	SPQ	Length (mm)	Width (mm)	Height (mm)
TRS3232ECDR	SOIC	D	16	2500	356.0	356.0	35.0
TRS3232ECDWR	SOIC	DW	16	2000	350.0	350.0	43.0
TRS3232ECPWR	TSSOP	PW	16	2000	356.0	356.0	35.0
TRS3232ECPWR	TSSOP	PW	16	2000	367.0	367.0	35.0
TRS3232EIDBR	SSOP	DB	16	2000	356.0	356.0	35.0
TRS3232EIDR	SOIC	D	16	2500	356.0	356.0	35.0
TRS3232EIDYYR	SOT-23-THIN	DYY	16	3000	336.6	336.6	31.8
TRS3232EIPWR	TSSOP	PW	16	2000	367.0	367.0	35.0
TRS3232EIPWR	TSSOP	PW	16	2000	356.0	356.0	35.0
TRS3232EIRGTR	VQFN	RGT	16	3000	367.0	367.0	35.0

Downloaded from Arrow.com.

D (R–PDSO–G16) PLASTIC SMALL OUTLINE

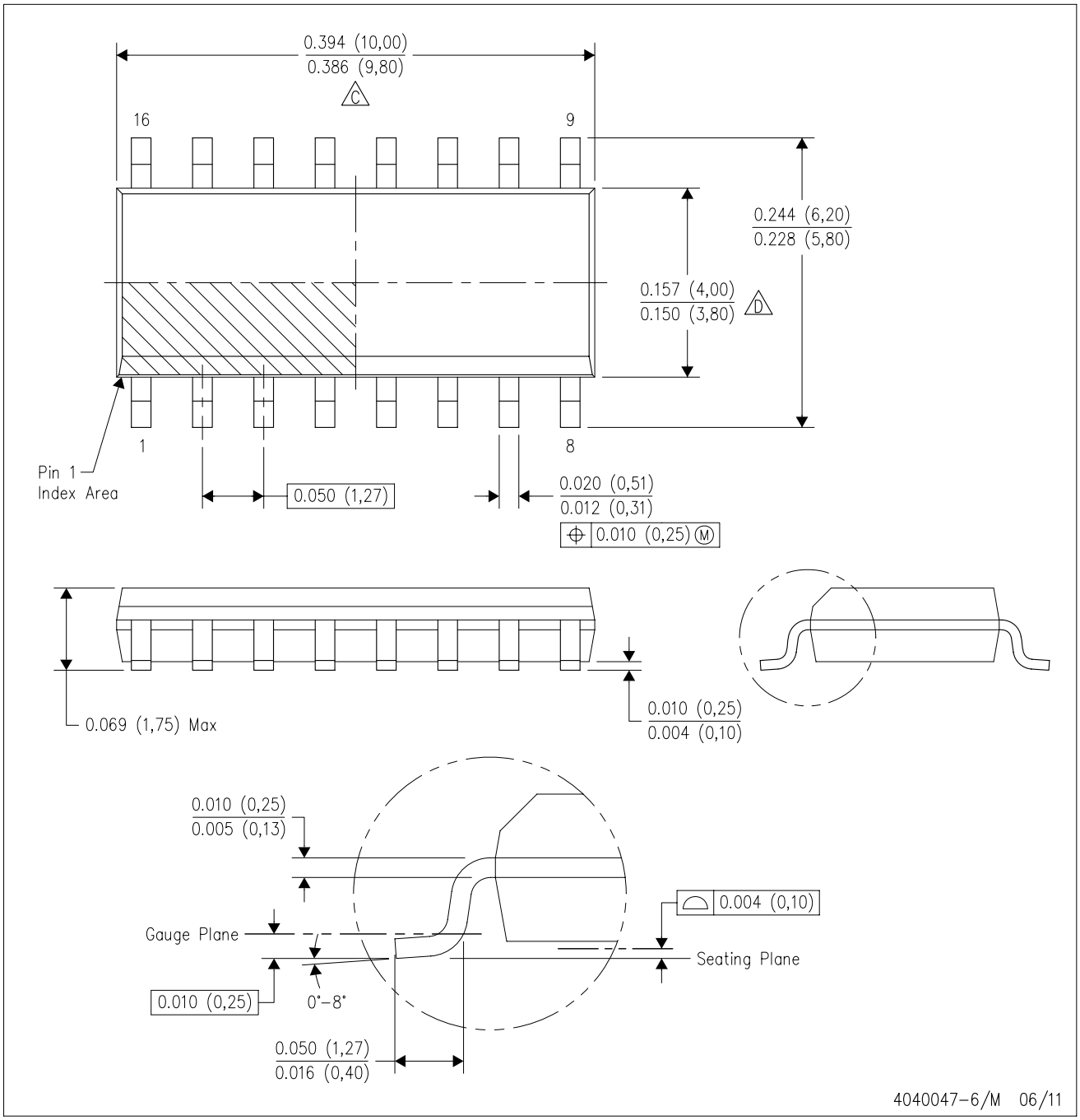

NOTES:
A. All linear dimensions are in inches (millimeters).
B. This drawing is subject to change without notice.
C. Body length does not include mold flash, protrusions, or gate burrs. Mold flash, protrusions, or gate burrs shall not exceed 0.006 (0,15) each side.
D. Body width does not include interlead flash. Interlead flash shall not exceed 0.017 (0,43) each side.
E. Reference JEDEC MS–012 variation AC.

Downloaded from Arrow.com.

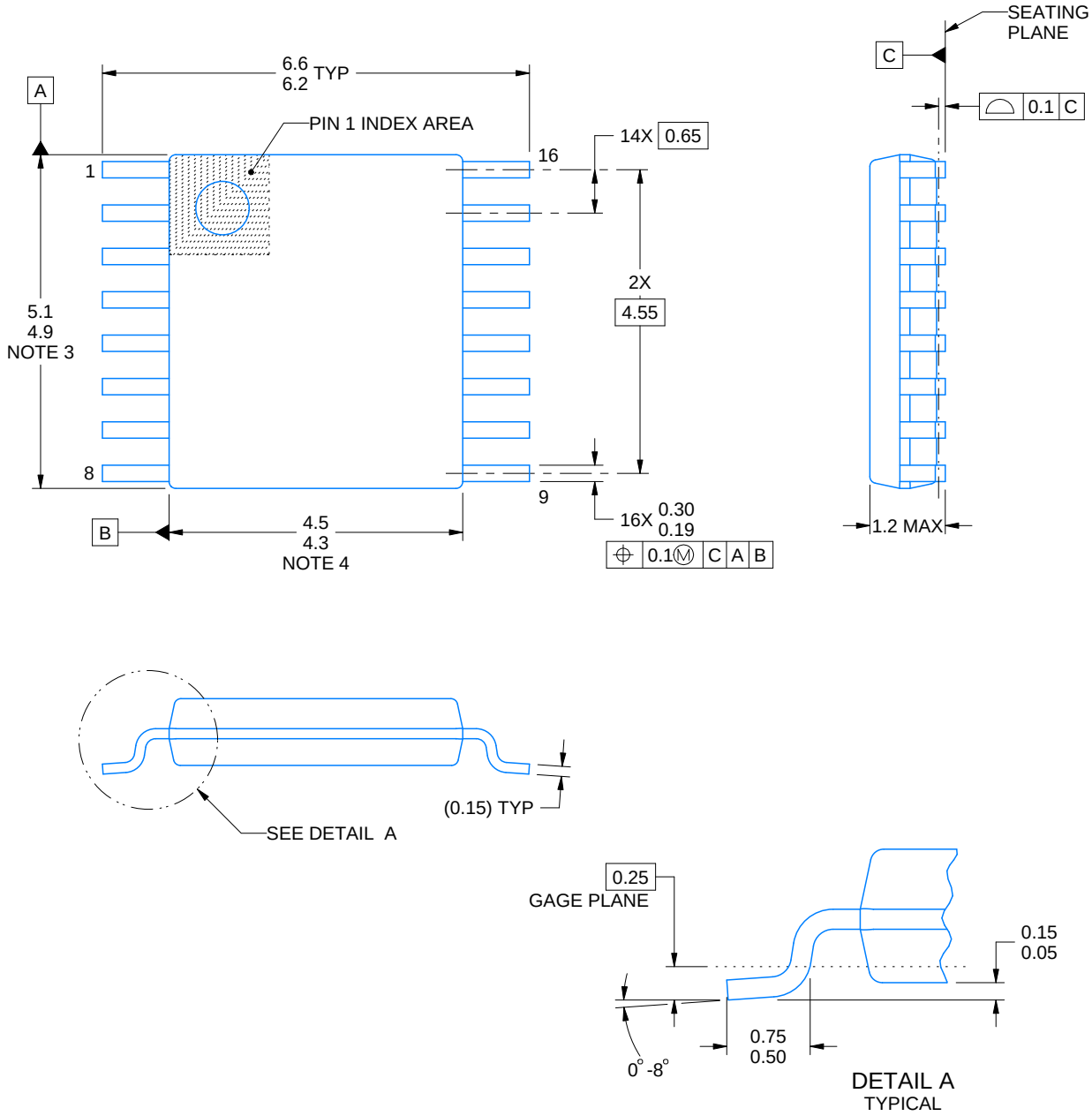

4220204/A 02/2017

NOTES:

1. All linear dimensions are in millimeters. Any dimensions in parenthesis are for reference only. Dimensioning and tolerancing per ASME Y14.5M.
2. This drawing is subject to change without notice.
3. This dimension does not include mold flash, protrusions, or gate burrs. Mold flash, protrusions, or gate burrs shall not exceed 0.15 mm per side.
4. This dimension does not include interlead flash. Interlead flash shall not exceed 0.25 mm per side.
5. Reference JEDEC registration MO-153.

Downloaded from Arrow.com.

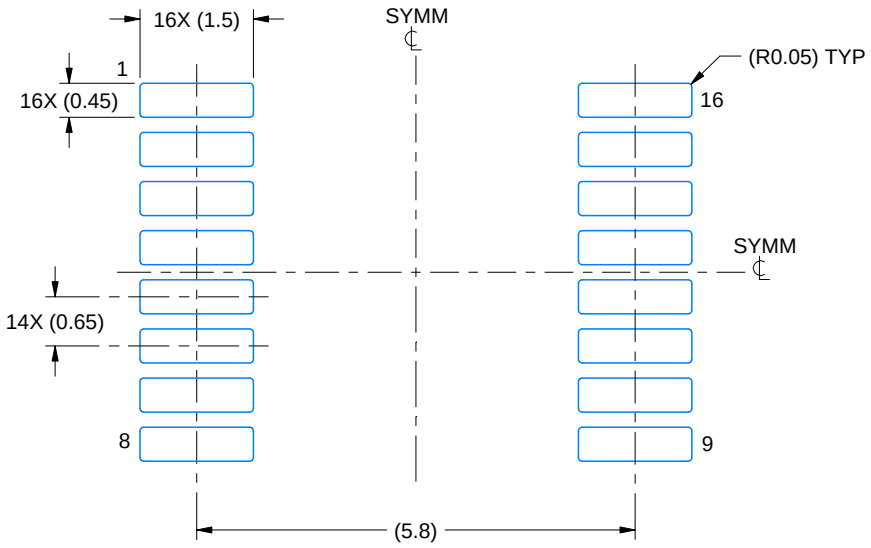

LAND PATTERN EXAMPLE
EXPOSED METAL SHOWN
SCALE: 10X

NON-SOLDER MASK DEFINED (PREFERRED)

SOLDER MASK DEFINED

SOLDER MASK DETAILS

4220204/A 02/2017

NOTES: (continued)

6. Publication IPC-7351 may have alternate designs.
7. Solder mask tolerances between and around signal pads can vary based on board fabrication site.

Downloaded from Arrow.com.

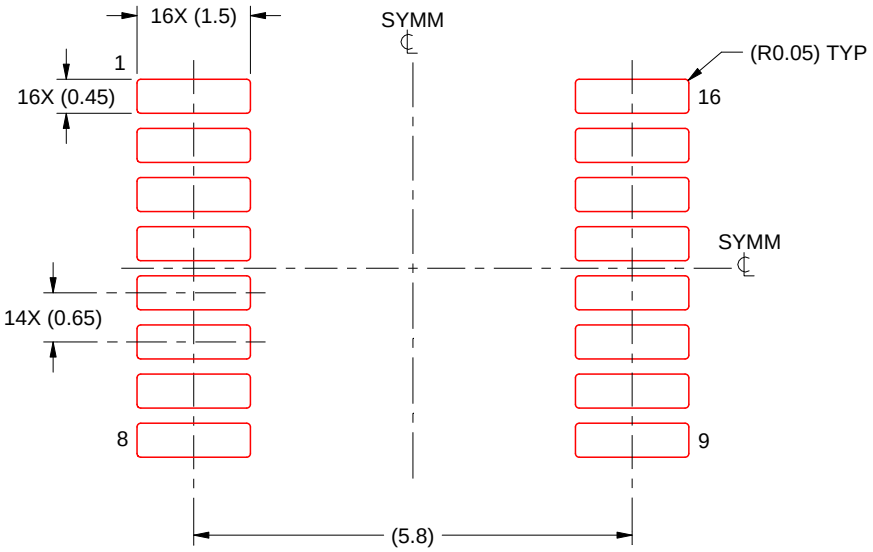

SOLDER PASTE EXAMPLE
BASED ON 0.125 mm THICK STENCIL
SCALE: 10X

4220204/A 02/2017

NOTES: (continued)

8. Laser cutting apertures with trapezoidal walls and rounded corners may offer better paste release. IPC-7525 may have alternate design recommendations.
9. Board assembly site may have different recommendations for stencil design.

Downloaded from Arrow.com.

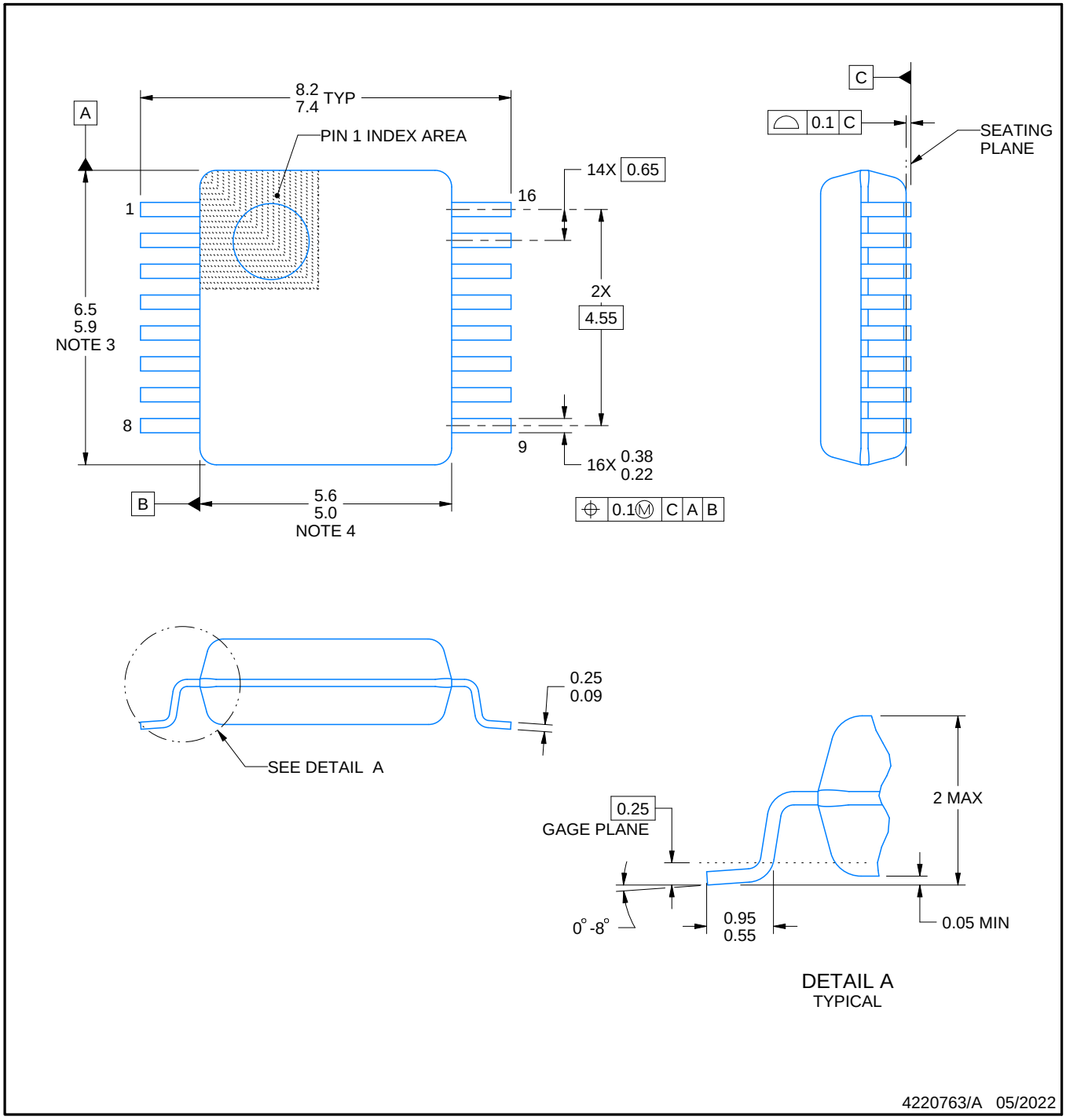

NOTES:

1. All linear dimensions are in millimeters. Any dimensions in parenthesis are for reference only. Dimensioning and tolerancing per ASME Y14.5M.
2. This drawing is subject to change without notice.
3. This dimension does not include mold flash, protrusions, or gate burrs. Mold flash, protrusions, or gate burrs shall not exceed 0.15 mm per side.
4. Reference JEDEC registration MO-150.

Downloaded from Arrow.com.

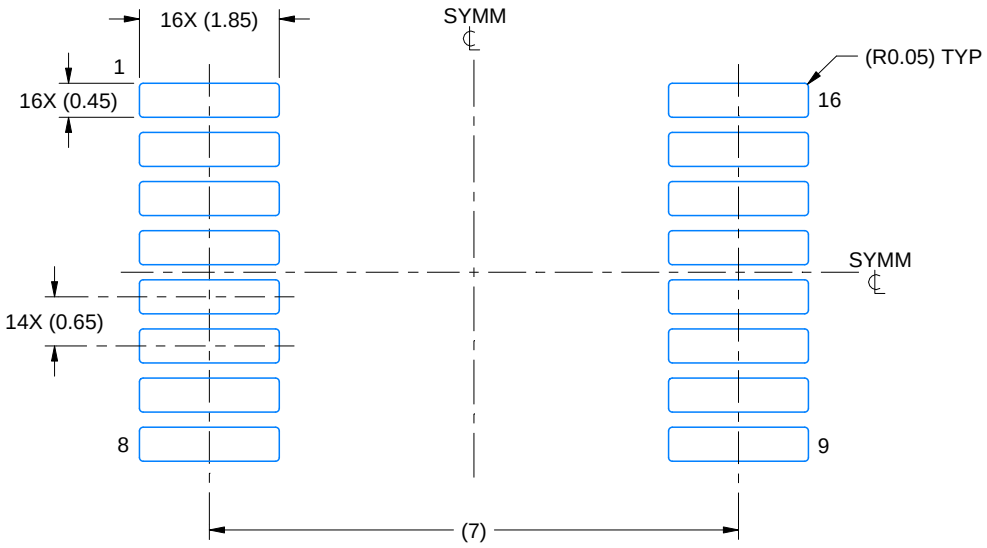

LAND PATTERN EXAMPLE
EXPOSED METAL SHOWN
SCALE: 10X

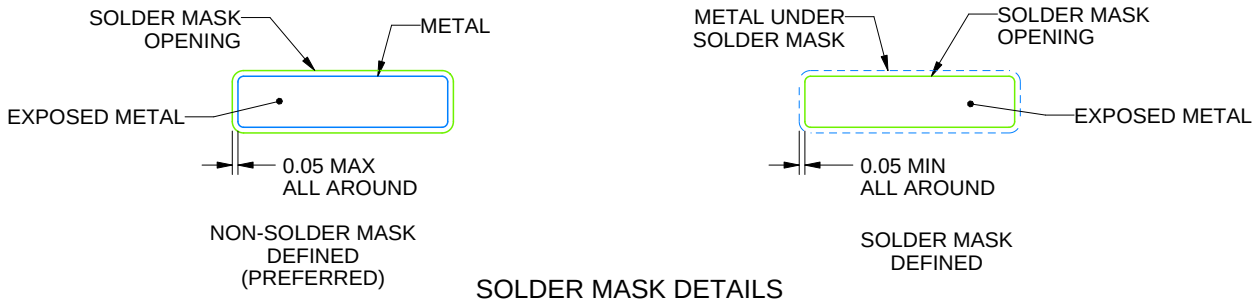

SOLDER MASK DETAILS

4220763/A 05/2022

NOTES: (continued)

5. Publication IPC-7351 may have alternate designs.
6. Solder mask tolerances between and around signal pads can vary based on board fabrication site.

Downloaded from Arrow.com.

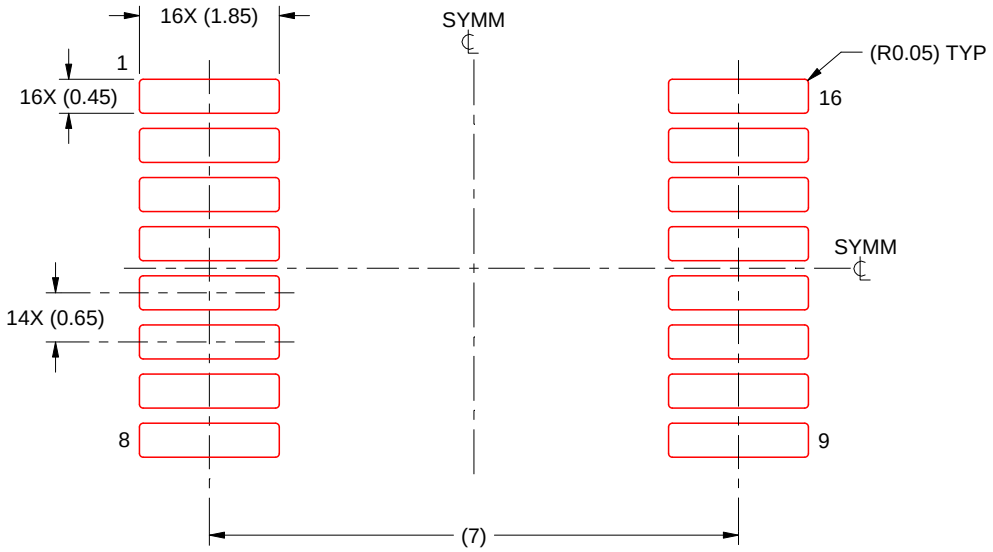

SOLDER PASTE EXAMPLE
BASED ON 0.125 mm THICK STENCIL
SCALE: 10X

4220763/A 05/2022

NOTES: (continued)

7. Laser cutting apertures with trapezoidal walls and rounded corners may offer better paste release. IPC-7525 may have alternate design recommendations.
8. Board assembly site may have different recommendations for stencil design.

Downloaded from Arrow.com.

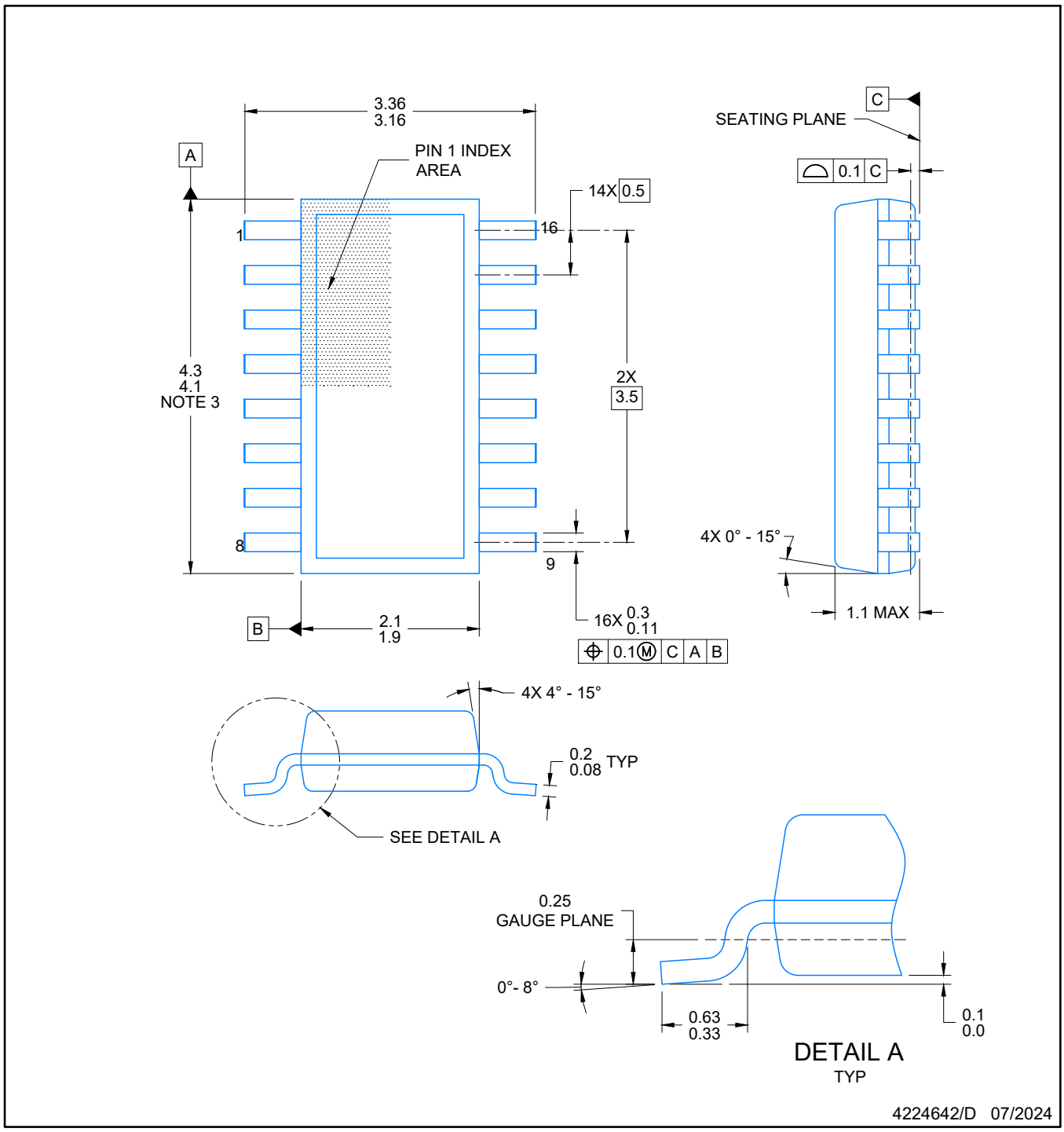

NOTES:

1. All linear dimensions are in millimeters. Any dimensions in parenthesis are for reference only. Dimensioning and tolerancing per ASME Y14.5M.
2. This drawing is subject to change without notice.
3. This dimension does not include mold flash, protrusions, or gate burrs. Mold flash, protrusions, or gate burrs shall not exceed 0.15 per side.
4. This dimension does not include interlead flash. Interlead flash shall not exceed 0.50 per side.
5. Reference JEDEC Registration MO-345, Variation AA

Downloaded from Arrow.com.

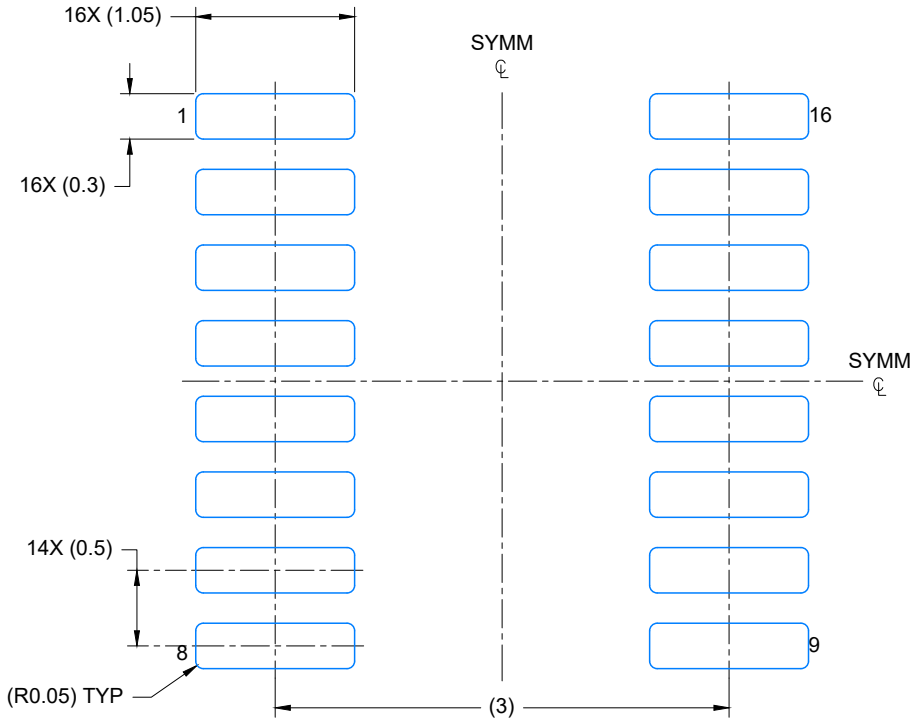

LAND PATTERN EXAMPLE
EXPOSED METAL SHOWN
SCALE: 20X

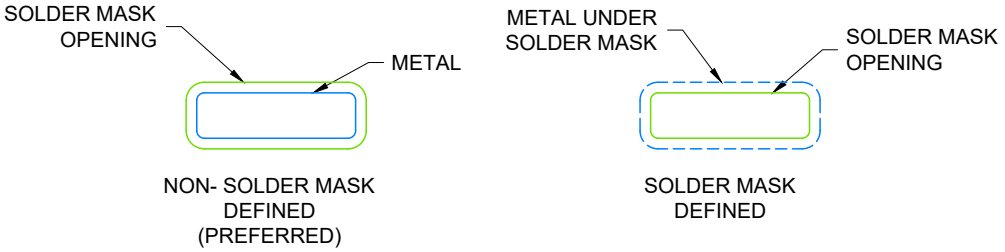

SOLDER MASK DETAILS

4224642/D 07/2024

NOTES: (continued)

6. Publication IPC-7351 may have alternate designs.
7. Solder mask tolerances between and around signal pads can vary based on board fabrication site.

Downloaded from Arrow.com.

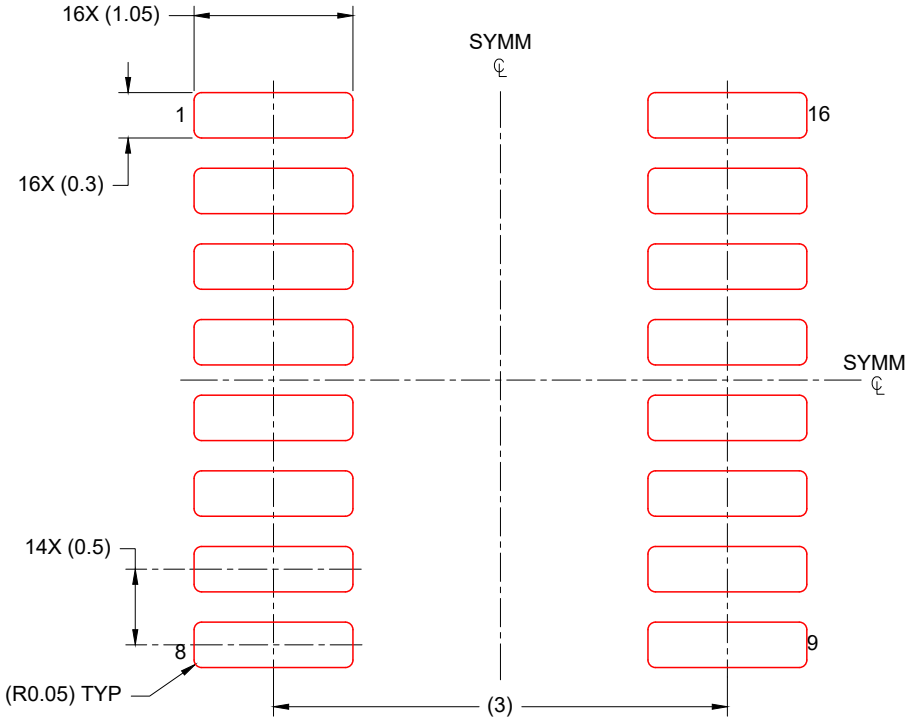

SOLDER PASTE EXAMPLE
BASED ON 0.125 mm THICK STENCIL
SCALE: 20X

4224642/D 07/2024

NOTES: (continued)

8. Laser cutting apertures with trapezoidal walls and rounded corners may offer better paste release. IPC-7525 may have alternate design recommendations.
9. Board assembly site may have different recommendations for stencil design.

Downloaded from Arrow.com.

GENERIC PACKAGE VIEW

DW 16

SOIC - 2.65 mm max height

7.5 x 10.3, 1.27 mm pitch

SMALL OUTLINE INTEGRATED CIRCUIT

This image is a representation of the package family, actual package may vary.
Refer to the product data sheet for package details.

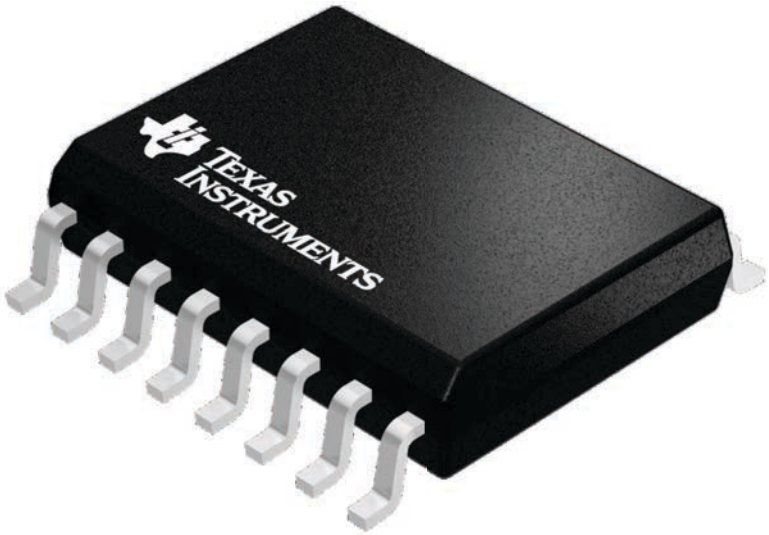

4224780/A

Downloaded from Arrow.com.

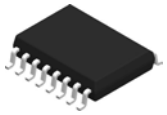

PACKAGE OUTLINE

DW0016A

SOIC - 2.65 mm max height

SOIC

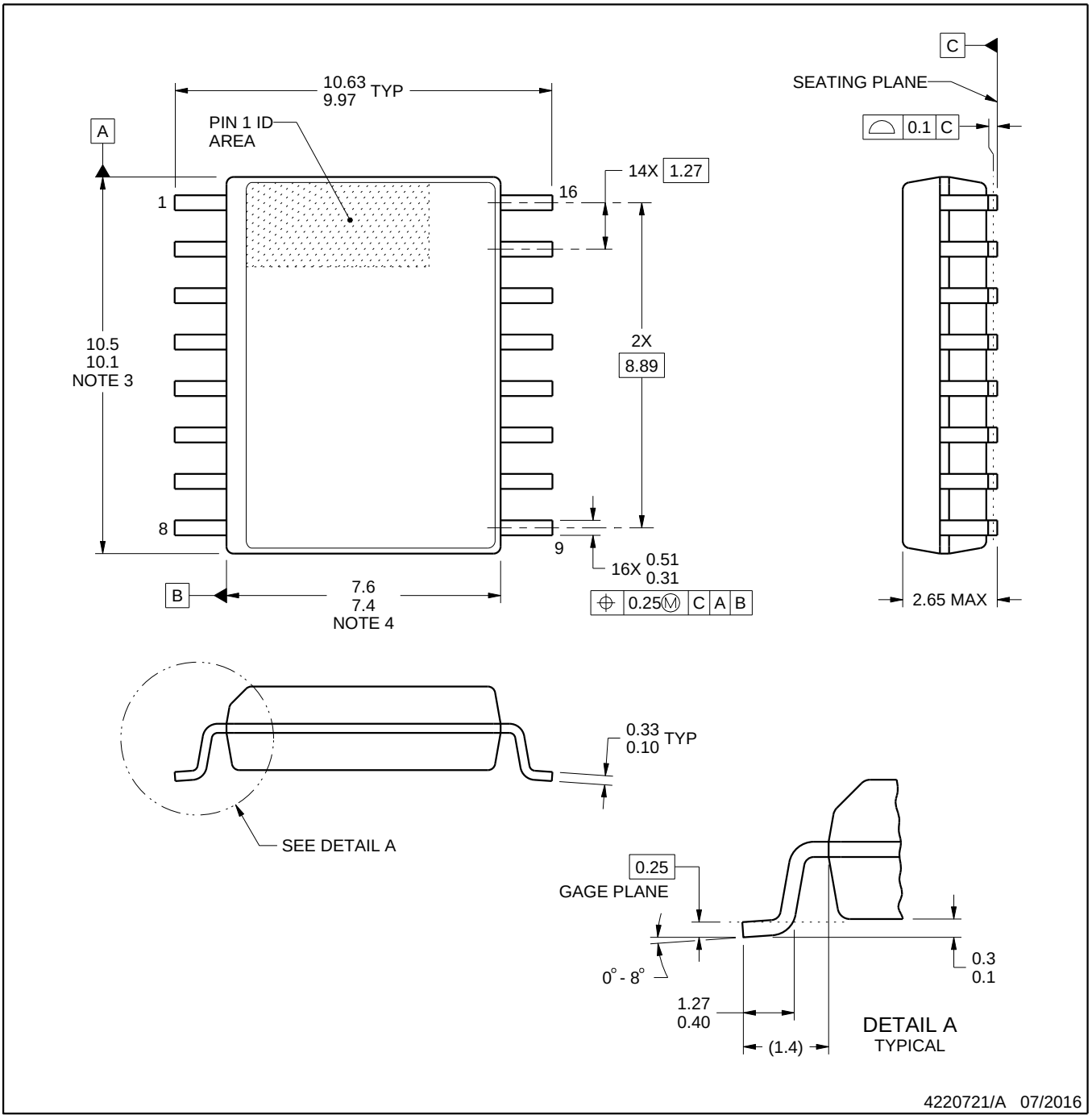

NOTES:

1. All linear dimensions are in millimeters. Dimensions in parenthesis are for reference only. Dimensioning and tolerancing per ASME Y14.5M.
2. This drawing is subject to change without notice.
3. This dimension does not include mold flash, protrusions, or gate burrs. Mold flash, protrusions, or gate burrs shall not exceed 0.15 mm, per side.
4. This dimension does not include interlead flash. Interlead flash shall not exceed 0.25 mm, per side.
5. Reference JEDEC registration MS-013.

Downloaded from Arrow.com.

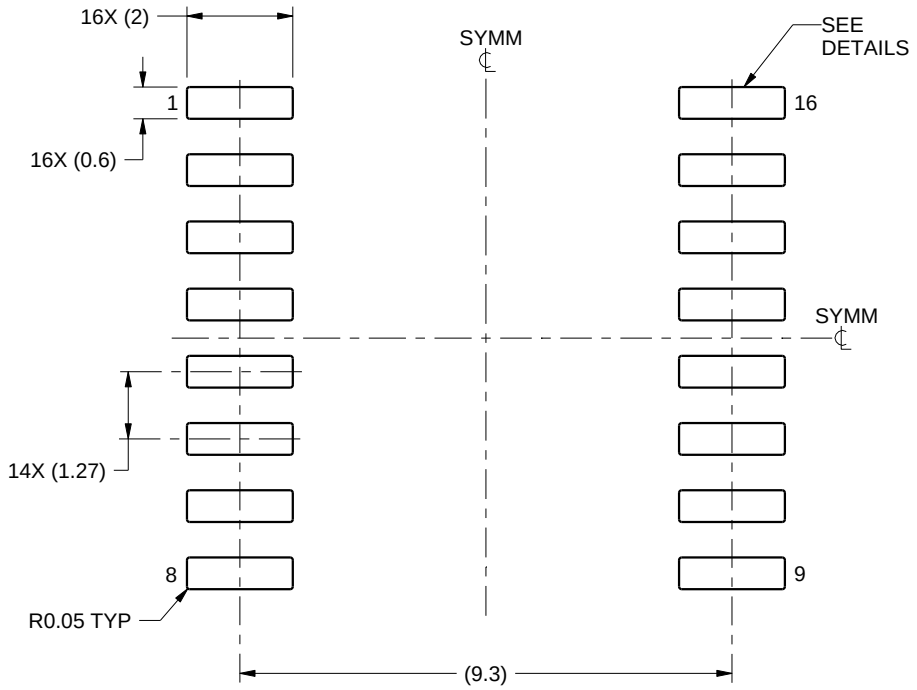

LAND PATTERN EXAMPLE
SCALE:7X

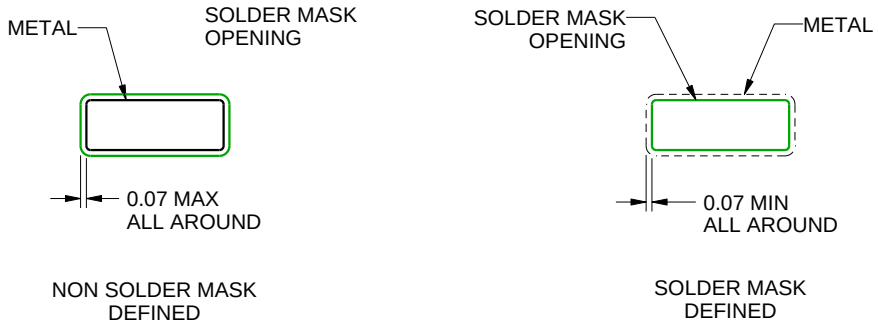

SOLDER MASK DETAILS

4220721/A 07/2016

NOTES: (continued)

6. Publication IPC-7351 may have alternate designs.
7. Solder mask tolerances between and around signal pads can vary based on board fabrication site.

Downloaded from Arrow.com.

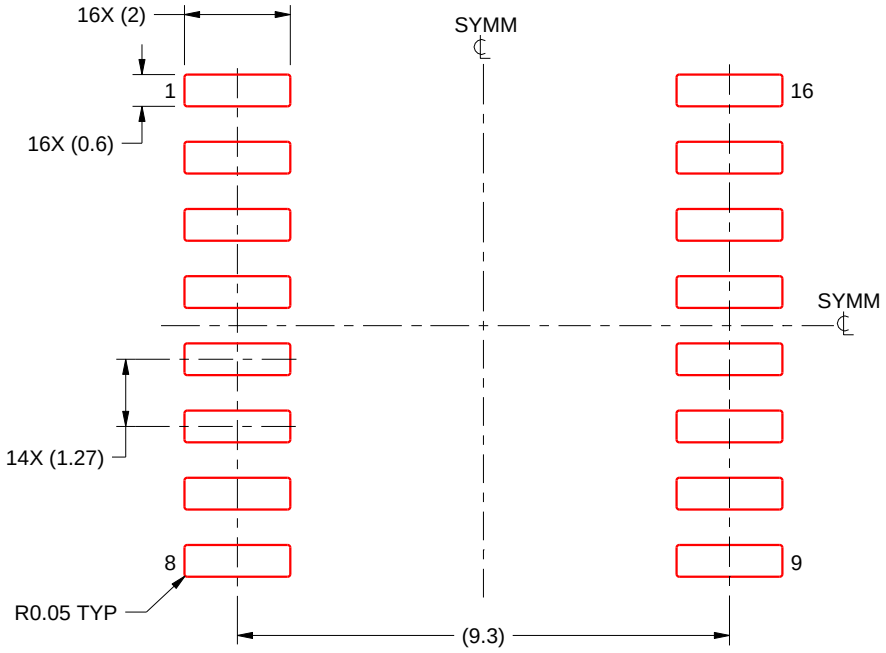

SOLDER PASTE EXAMPLE
BASED ON 0.125 mm THICK STENCIL
SCALE:7X

4220721/A 07/2016

NOTES: (continued)

8. Laser cutting apertures with trapezoidal walls and rounded corners may offer better paste release. IPC-7525 may have alternate design recommendations.
9. Board assembly site may have different recommendations for stencil design.

Downloaded from Arrow.com.

GENERIC PACKAGE VIEW

RGT 16 VQFN - 1 mm max height

PLASTIC QUAD FLATPACK - NO LEAD

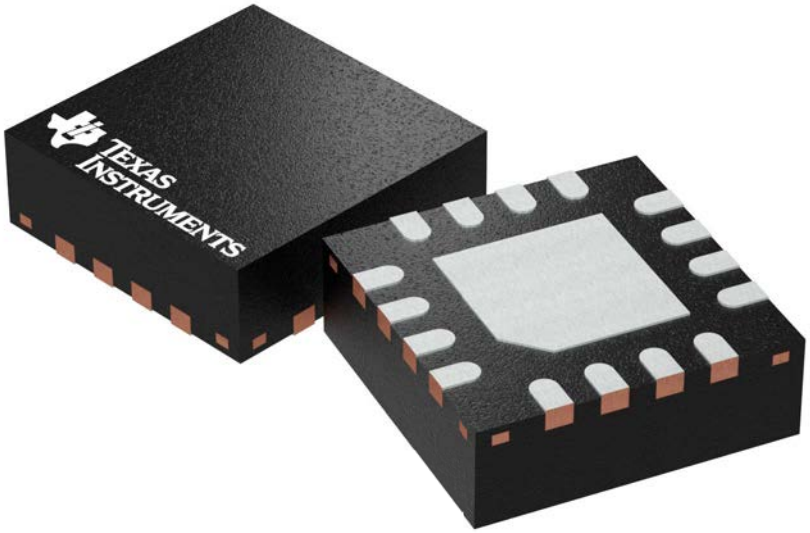

Images above are just a representation of the package family, actual package may vary.
Refer to the product data sheet for package details.

4203495/I

Downloaded from Arrow.com.

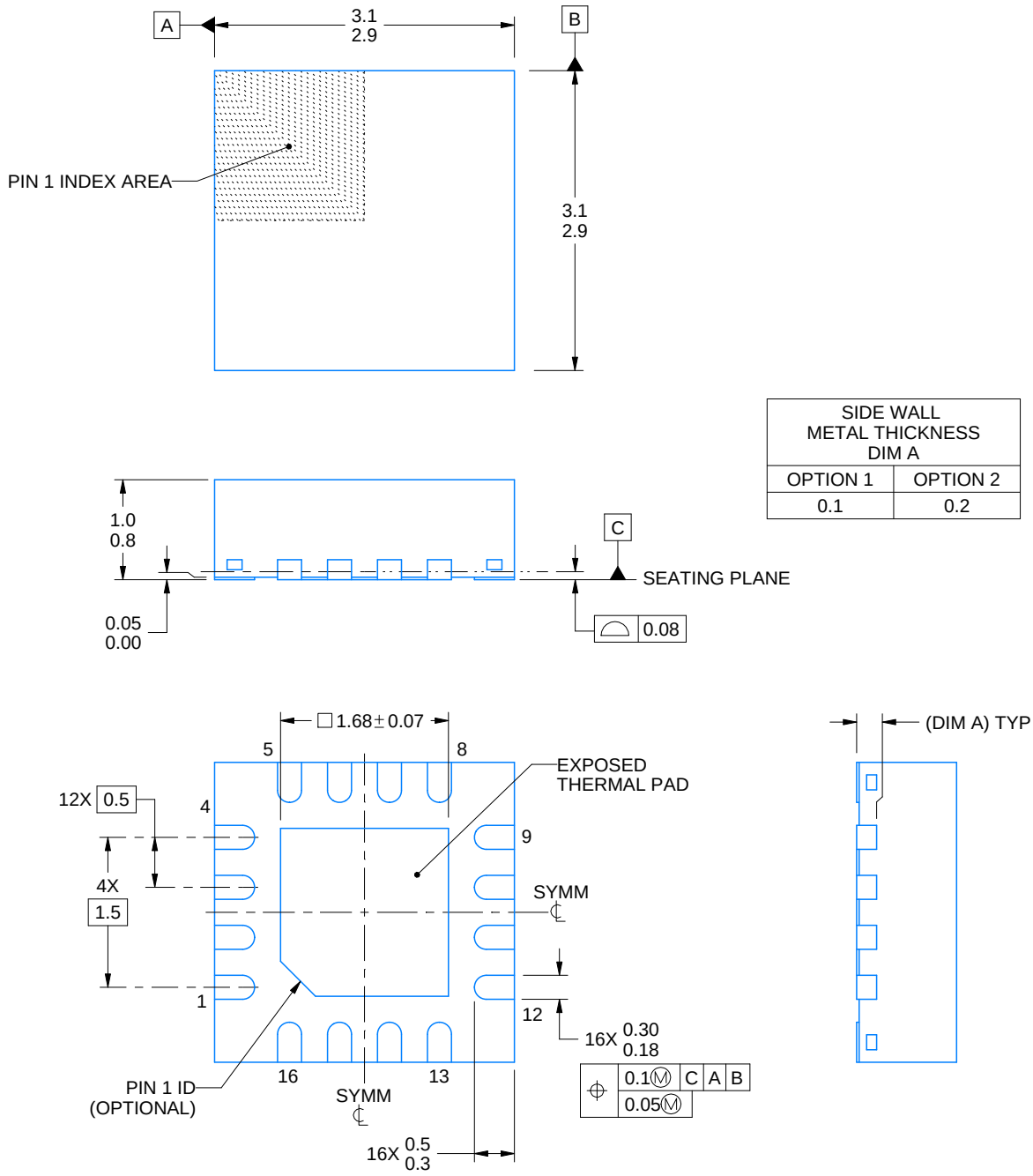

SIDE WALL METAL THICKNESS DIM A	
OPTION 1	OPTION 2
0.1	0.2

4222419/D 04/2022

NOTES:

1. All linear dimensions are in millimeters. Any dimensions in parenthesis are for reference only. Dimensioning and tolerancing per ASME Y14.5M.
2. This drawing is subject to change without notice.
3. The package thermal pad must be soldered to the printed circuit board for thermal and mechanical performance.

Downloaded from Arrow.com.

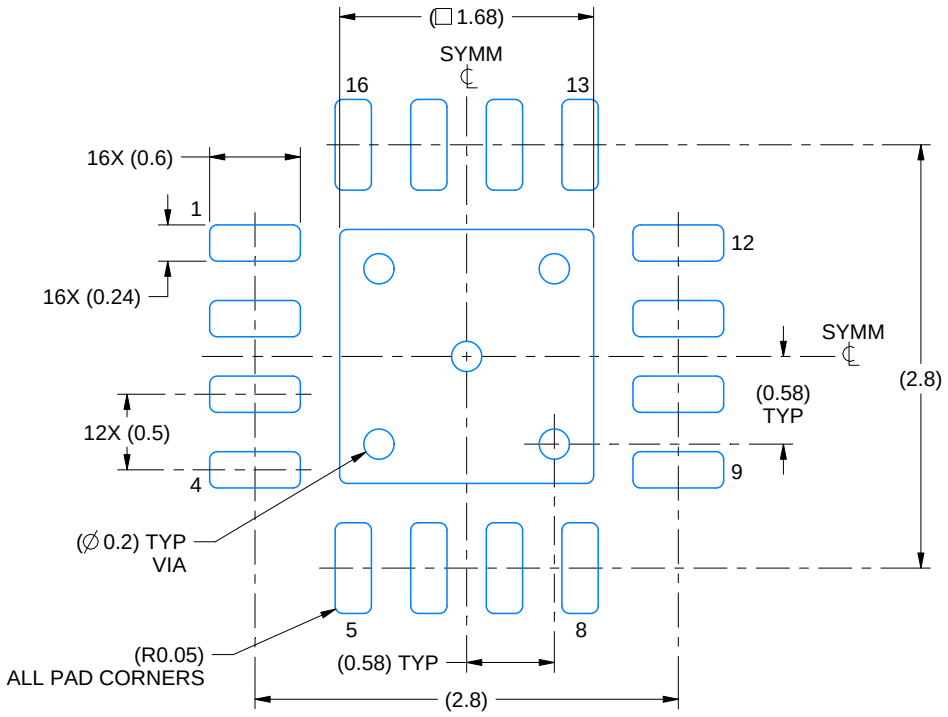

LAND PATTERN EXAMPLE
EXPOSED METAL SHOWN
SCALE:20X

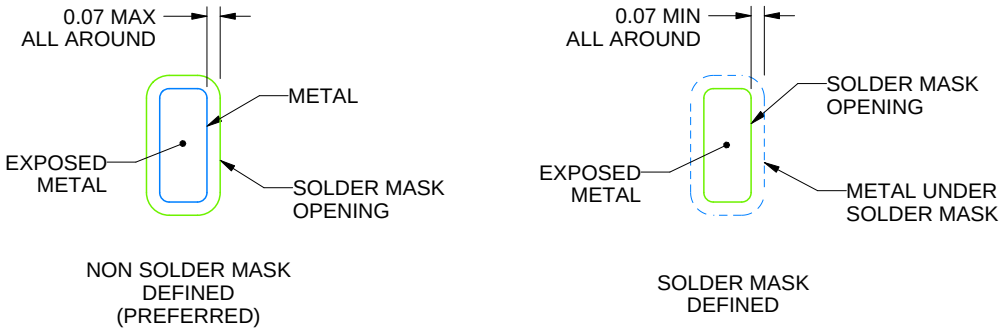

SOLDER MASK DETAILS

4222419/D 04/2022

NOTES: (continued)

4. This package is designed to be soldered to a thermal pad on the board. For more information, see Texas Instruments literature number SLUA271 (www.ti.com/lit/slua271).
5. Vias are optional depending on application, refer to device data sheet. If any vias are implemented, refer to their locations shown on this view. It is recommended that vias under paste be filled, plugged or tented.

Downloaded from Arrow.com.

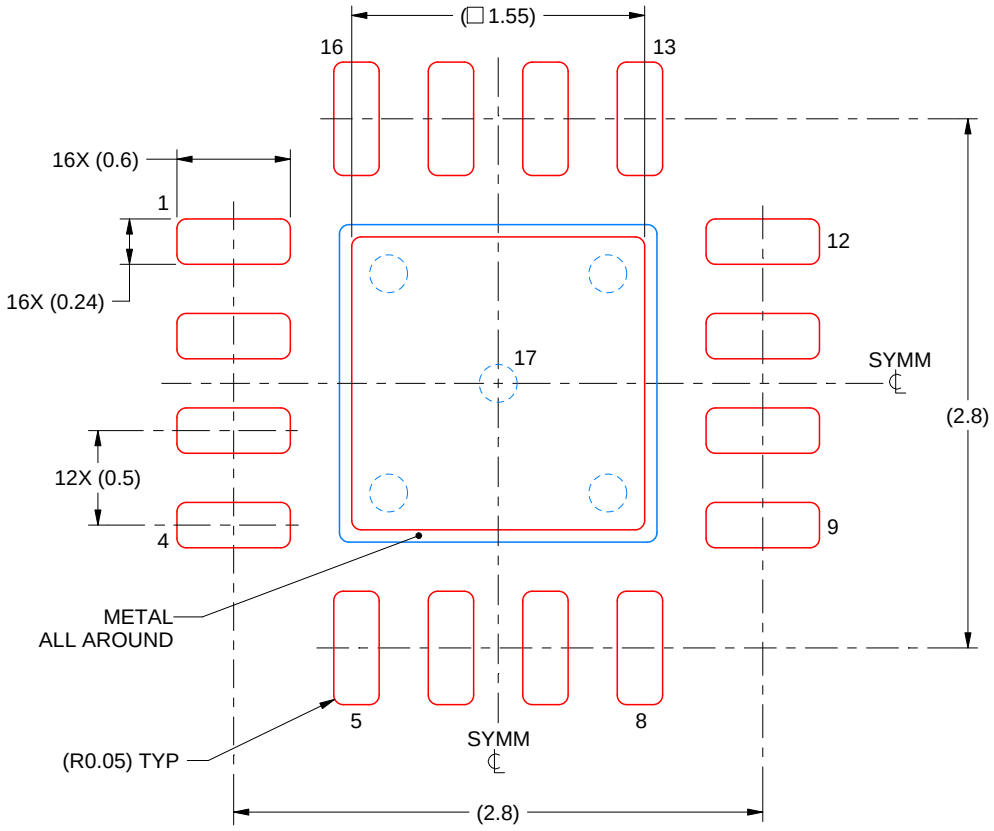

SOLDER PASTE EXAMPLE
BASED ON 0.125 mm THICK STENCIL

EXPOSED PAD 17:
85% PRINTED SOLDER COVERAGE BY AREA UNDER PACKAGE
SCALE:25X

4222419/D 04/2022

NOTES: (continued)

6. Laser cutting apertures with trapezoidal walls and rounded corners may offer better paste release. IPC-7525 may have alternate design recommendations.

Downloaded from Arrow.com.

IMPORTANT NOTICE AND DISCLAIMER

TI PROVIDES TECHNICAL AND RELIABILITY DATA (INCLUDING DATA SHEETS), DESIGN RESOURCES (INCLUDING REFERENCE DESIGNS), APPLICATION OR OTHER DESIGN ADVICE, WEB TOOLS, SAFETY INFORMATION, AND OTHER RESOURCES “AS IS” AND WITH ALL FAULTS, AND DISCLAIMS ALL WARRANTIES, EXPRESS AND IMPLIED, INCLUDING WITHOUT LIMITATION ANY IMPLIED WARRANTIES OF MERCHANTABILITY, FITNESS FOR A PARTICULAR PURPOSE OR NON-INFRINGEMENT OF THIRD PARTY INTELLECTUAL PROPERTY RIGHTS.

These resources are intended for skilled developers designing with TI products. You are solely responsible for (1) selecting the appropriate TI products for your application, (2) designing, validating and testing your application, and (3) ensuring your application meets applicable standards, and any other safety, security, regulatory or other requirements.

These resources are subject to change without notice. TI grants you permission to use these resources only for development of an application that uses the TI products described in the resource. Other reproduction and display of these resources is prohibited. No license is granted to any other TI intellectual property right or to any third party intellectual property right. TI disclaims responsibility for, and you will fully indemnify TI and its representatives against, any claims, damages, costs, losses, and liabilities arising out of your use of these resources.

TI’s products are provided subject to TI’s Terms of Sale or other applicable terms available either on ti.com or provided in conjunction with such TI products. TI’s provision of these resources does not expand or otherwise alter TI’s applicable warranties or warranty disclaimers for TI products.

TI objects to and rejects any additional or different terms you may have proposed.

Mailing Address: Texas Instruments, Post Office Box 655303, Dallas, Texas 75265
Copyright © 2025, Texas Instruments Incorporated

Downloaded from Arrow.com.