ADVANCE by signify

LED Driver

Xitanium SR

XJ180C090V285VSF2

The Advance Xitanium SR LED driver can help reduce complexity and cost of light fixtures used in connected lighting systems in outdoor lighting applications. It features a standard digital interface to enable direct connection to SR-certified components. Functionality that ordinarily would require additional auxiliary components is integrated into the driver. The result is a simple, cost-effective light fixture that can enable every fixture to become a wireless node.

Specifications

Input Voltage (Vrms)	Output Power (W)	Output Voltage (V)	Output Current (A)	Efficiency@ Max. Load and 70°C Case	Max. Case Temp. (°C)	Input Current (Arms)	Max. Input Power (W)[1]	THD @ Max. Load	Power Factor @ Max. Load	Surge Protection Common/ Diff (KV)	Envir. Protection Rating	Dim.	Dimming Range	Min. Output Current (A)	Driver Type
277	180	100 - 285	0.1A -0.9A	91.5	Life - 85˚C UL - 90˚C	0.75	200	<10%	>0.95	6	UL damp & dry	DALI	10% ~ 100%	0.05	Constant Current
480				93		0.43		<15%							

Enclosure

	In. (mm)	Tolerance
Case Length (L2)	8.31 (211.1)	± 0.5mm
Case Width (W)	2.31 (58.6)	± 0.5mm
Case Height (H)	1.48 (37.6)	± 0.5mm
Mounting Length (M)	8.91 (226.3)	± 0.5mm
Overall Length (L1)	9.45 (240.0)	± 0.5mm
Center of SimpleSet Antenna (L3)	3.75 (95.3)	± 0.5mm

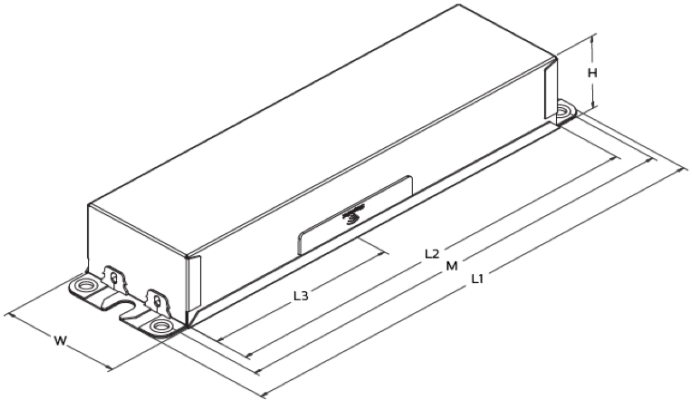

Wiring Diagram

	Wire Length (mm)
Black/Orange (Line)	270 (± 30)
Black/White (Neutral)	270 (± 30)
Red (Positive, LED output)	270 (± 30)
Blue (Negative, LED output)	270 (± 30)
Violet/White (Positive, DA+)	270 (± 30)
Pink/White (Negative, DA-)	270 (± 30)
Brown(Positive +24V)	270 (± 30)
Orange(Logical Signal Input)	270 (± 30)

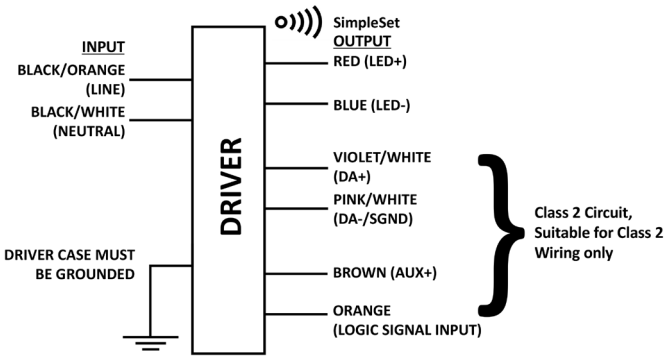

1. Based on 1W load from SR power supply and 6.2W load from auxiliary power supply.

Warning

- Install in accordance with national and local electrical codes.
- The field-wiring leads or push-in terminals shall be enclosed.

RoHS COMPLIANT c UL us LISTED

Downloaded from Arrow.com.

Xitanium SR XJ180C090V285VSF2

180W 277-480 0.9A SR with Auxiliary Supply

Electrical Specifications

All the specifications are typical and at 25°C Ta unless specified otherwise.

Features

- Compatible with SR-certified devices
- Standard SR digital interface including integral power supply
- Auxiliary power supply for higher power device requirements
- Accurate energy metering
- Logic signal input
- Drive current setting via SimpleSet
- 5-year limited warranty[1]
- Memory Bank 1 extension per ANSI C137.4

Benefits

- Enables interoperability with multiple sensor/network system vendors
- Reduces cost and complexity of outdoor connected lighting systems[2]
- Eliminates need for high-voltage relays to increase system reliability
- 2% metering accuracy meets proposed ANSI standard C136.52
- Can be used with standard motion sensors for local control to complement network control.
- Standardized luminaire data for Asset Management

Application

- Site & area
- Parking garages
- Floodlights
- Roadway

Product Data

Ordering Information	
Order Code	XJ180C090V285VSF2M (Mid-Pack, 10pcs/Box), 12NC: 929001792113
GTIN	781087163726
Input Information	
Line Frequency	50/60Hz
Min. Mains Voltage Operational	250Vac
Max. Mains Voltage Operational	528Vac
Output Information	
Maximum Open Circuit Voltage	390Vdc
Output Current Ripple = (Pk-Avg)/Avg	< 15% @ max Iout
Flicker	Meets NEMA 77
Output Current Tolerance (At Maximum Output Current)	<5%
Protections	Short Circuit and Open Circuit Protection for LED + and LED-
Control Lead Leakage Current (SR)	The dimming lead leakage current is 0.031mA. The maximum number of drivers that can be connected in parallel to one dimming control circuit is based on this dimming lead leakage current and the calculation is described in the corresponding Design-in Guide.
Features	
AOC (adjustable output current)	0.1A-0.9A via SimpleSet (Factory Default at 0.7A)
CLO, Dynadimmer, Suitable for Outdoor Use? DTL (Advanced thermal control)?	Yes
Interfaces	Simpleset, Sensor Ready(SR), Logical Signal Input (LSI), Auxilairy Power Supply
Configurable Features	Advance Driver Thermal Limit, Dynadimmer, Dim to Off, Password protection, and many others.
Power Reporting Accuracy	+/-2% in performance window and under nominal operating conditions
Auxiliary Power Supply (According to ANSI C137.4)	
Nominal Aux. Output Voltage	24Vdc (± 10%, including line and load regulation)

1. Advance Xitanium LED drivers are designed and manufactured to engineering standards correlating to an average life expectancy of 50,000 hours of operation at maximum rated case temperature. Minimum 90% survivals based on MTTF modeling.
2. Functionality that ordinarily would require additional auxiliary components is integrated into the driver.

Downloaded from Arrow.com.

Xitanium SR XJ180C090V285VSF2

180W 277-480 0.9A SR with Auxiliary Supply

Electrical Specifications

All the specifications are typical and at 25°C Ta unless specified otherwise.

Product Data (continued)

Rated Aux. Output Power	3W continuous, 6W peak
Protections	Short Circuit & Open Circuit Protection for Aux. + and Aux. – and Over-temperature Foldback
SR power supply	
Current Source	52mA to 60mA
Voltage Range	12V to 20V
Communication Protocol	DALI-2, D4i, ANSI C137.4
Mis-wiring to Mains Protection	No
Logic Signal Input (LSI)	
Dry Contact Input	Yes
Logic Low	<3V or open
Logic High	>7V
Max. Current Draw	2mA
Environment & Approbation	
Operating Ambient Temp. Range	-40°C to +55°C
Max Case Temperature (Tcase)	85°C for Life & 90°C for UL Safety
Agency Approbations	UL 8750, cUL, Class P (UL, cUL)
Electromagnetic Compliance	FCC Title 47 Part 15 Class A
Audible Noise	<24dB Class A
Weight	2.1Lbs/0.95Kgs
Envir. Protection Rating	UL Dry and Damp

Downloaded from Arrow.com.

Xitanium SR XJ180C090V285VSF2

180W 277-480 0.9A SR with Auxiliary Supply

Electrical Specifications

All specifications are typical and at 25°C Ta unless specified otherwise.

Dimming Characteristics

SR drivers use a logarithmic dimming curve as default. Dimming is accomplished through the 2-wire DALI connection to the sensor. DALI standard IEC62386_102 Edition 2 defines the logarithmic dimming curve. DALI standard IEC62386_101 Edition 2 defines the linear dimming curve as well as the command for switching between logarithmic and linear curves.

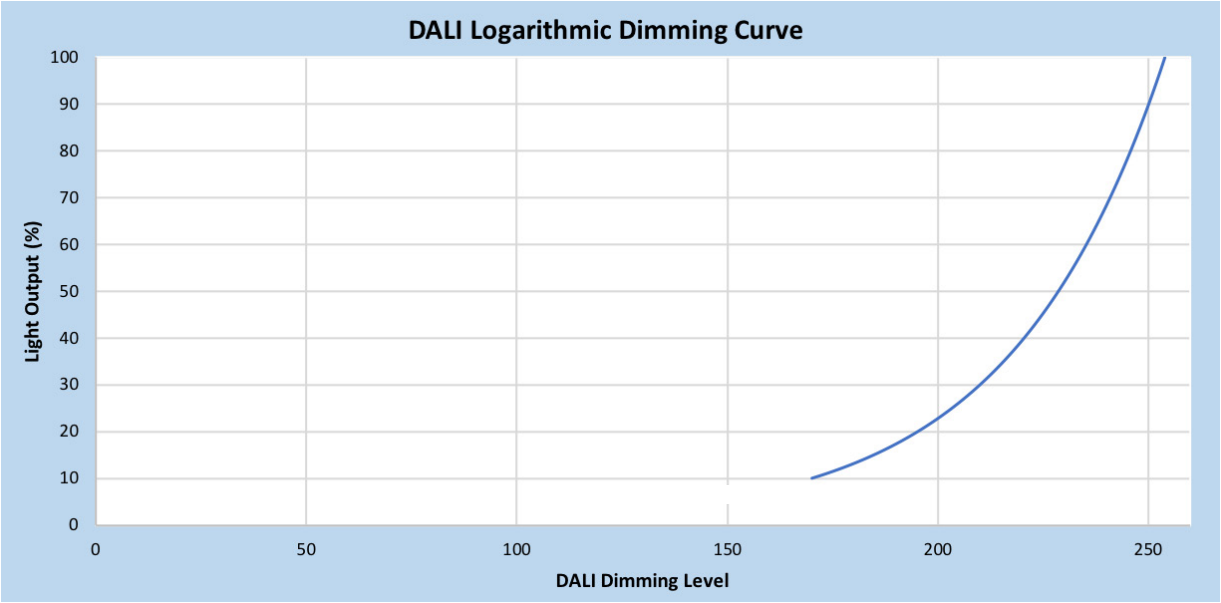

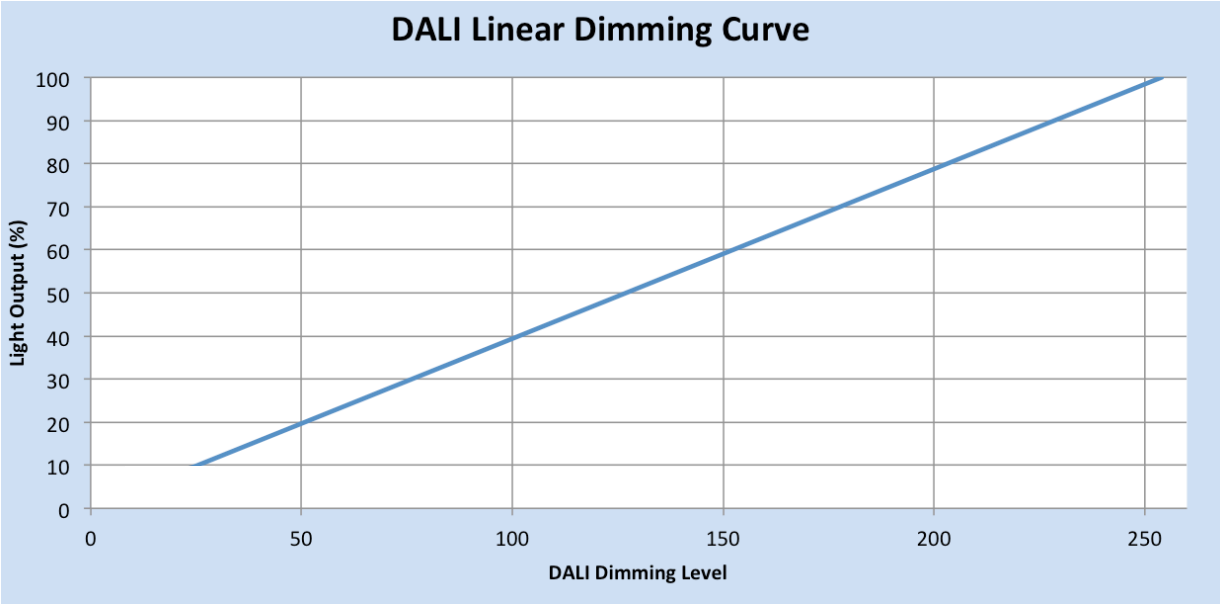

Downloaded from Arrow.com.

Xitanium SR XJ180C090V285VSF2

180W 277-480 0.9A SR with Auxiliary Supply

Electrical Specifications

All specifications are typical and at 25°C Ta unless specified otherwise.

Operating Window

The driver current cutback feature provides for an increased output voltage with a reduced output current during abnormal LED operation, such as cold weather starting. Output tolerance +/-5%.

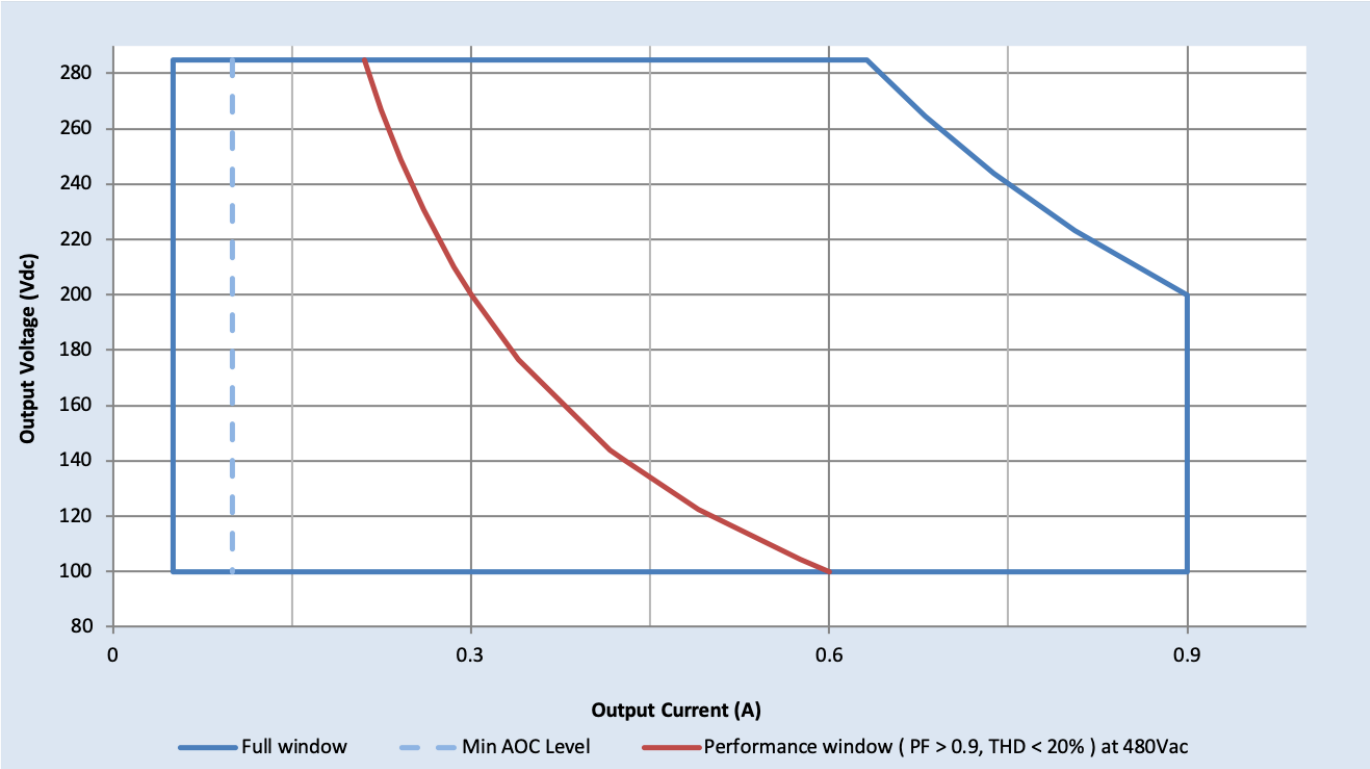

Notes

1. Factory default output current is 0.7A.
2. To get a 100% to 10% dimming range, the output current setting through AOC should be ≥ 0.5A.
3. Factory default minimum dimming level is 10%. This can be adjusted between 10% and 100% using Advance MultiOne.

Downloaded from Arrow.com.

Xitanium SR XJ180C090V285VSF2M

180W 0.1–0.9A 0–10V Dimming

Electrical Specifications

All specifications are typical and at 25°C Ta unless specified otherwise.

Logic Signal Input (LSI) Characteristics (Typical)

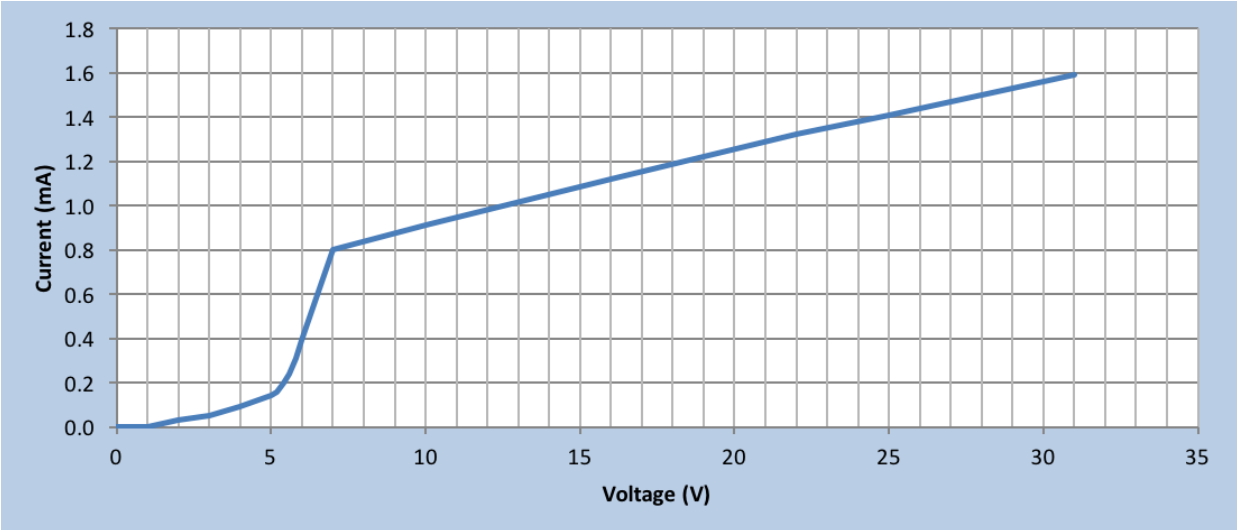

Downloaded from Arrow.com.

Xitanium SR XJ180C090V285VSF2

180W 277-480 0.9A SR with Auxiliary Supply

Electrical Specifications

All the specifications are typical and at 25°C Ta unless specified otherwise.

Driver Lifetime Vs. Driver Case Temperature

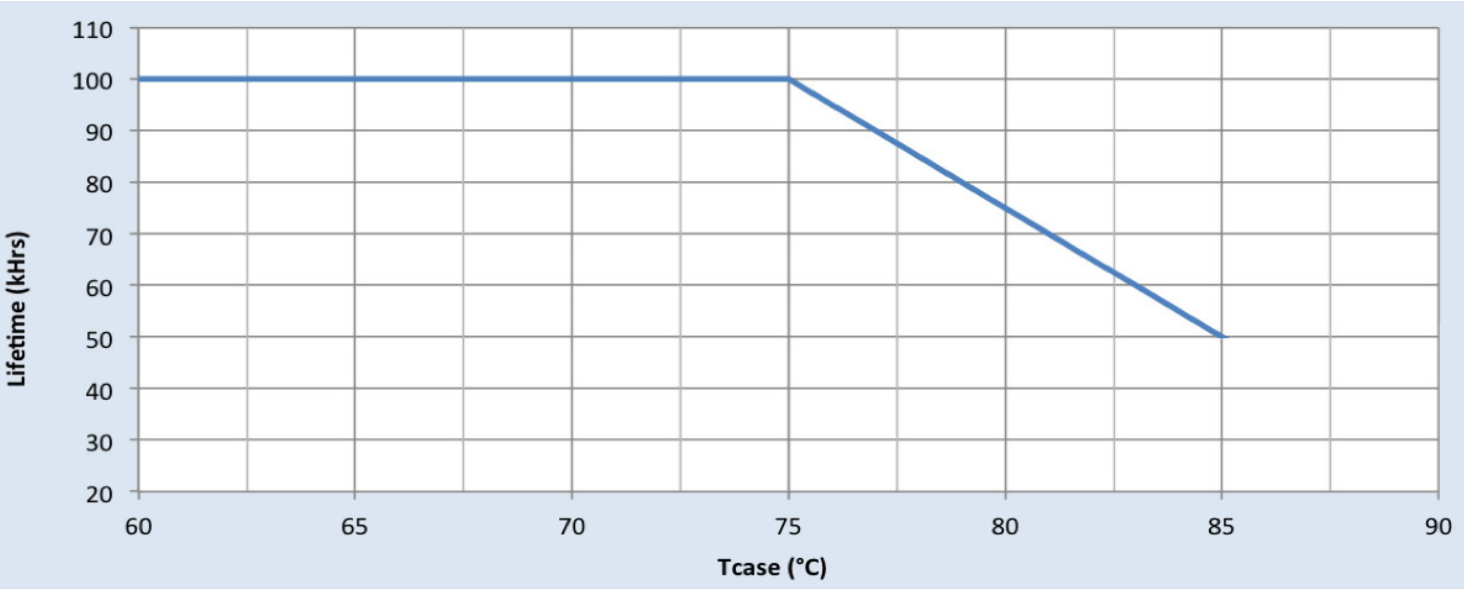

Downloaded from Arrow.com.

Xitanium SR XJ180C090V285VSF2

180W 277-480 0.9A SR with Auxiliary Supply

Performance Characteristics

Based on measurements on a typical sample. The accuracy of the measurements is within the tolerance of the measurement instruments. The graphs are meant to be a guideline and not a specification. Data below at 75°C Tcase.

Efficiency Vs. Output Voltage @ 277VAC

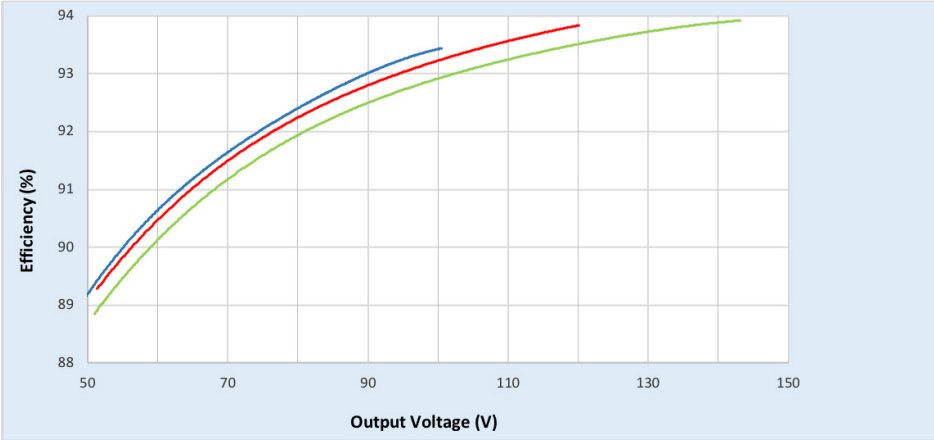

Efficiency Vs. Output Voltage @ 347VAC

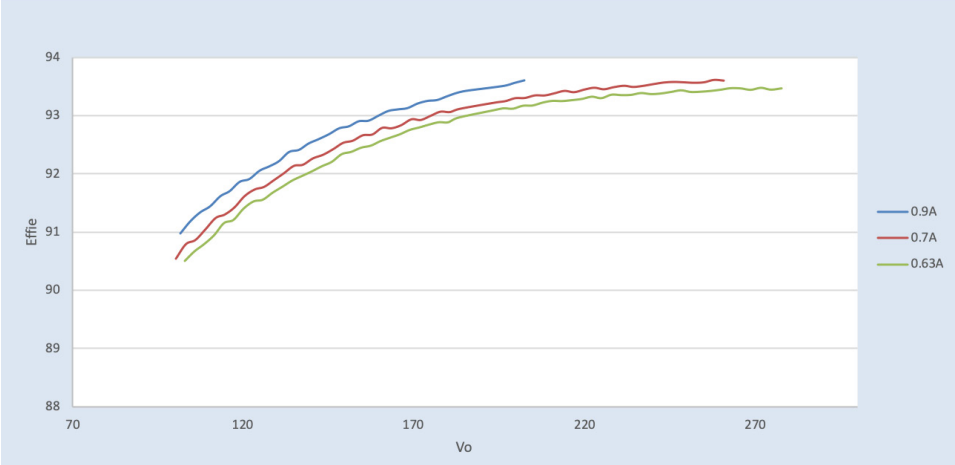

Efficiency Vs. Output Voltage @ 480VAC

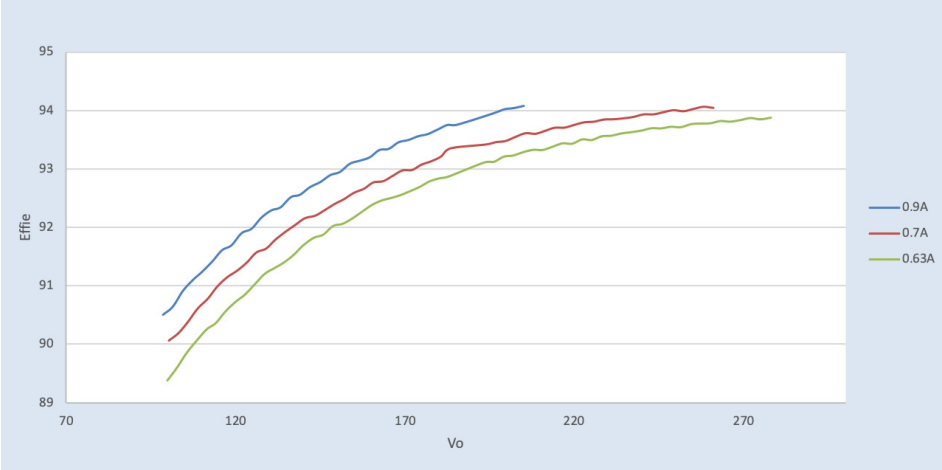

Downloaded from Arrow.com.

Xitanium SR XJ180C090V285VSF2

180W 277-480 0.9A SR with Auxiliary Supply

Performance Characteristics

Based on measurements on a typical sample. The accuracy of the measurements is within the tolerance of the measurement instruments. The graphs are meant to be a guideline and not a specification. Data below at 75°C Tcase.

Power Factor Vs. Output Power

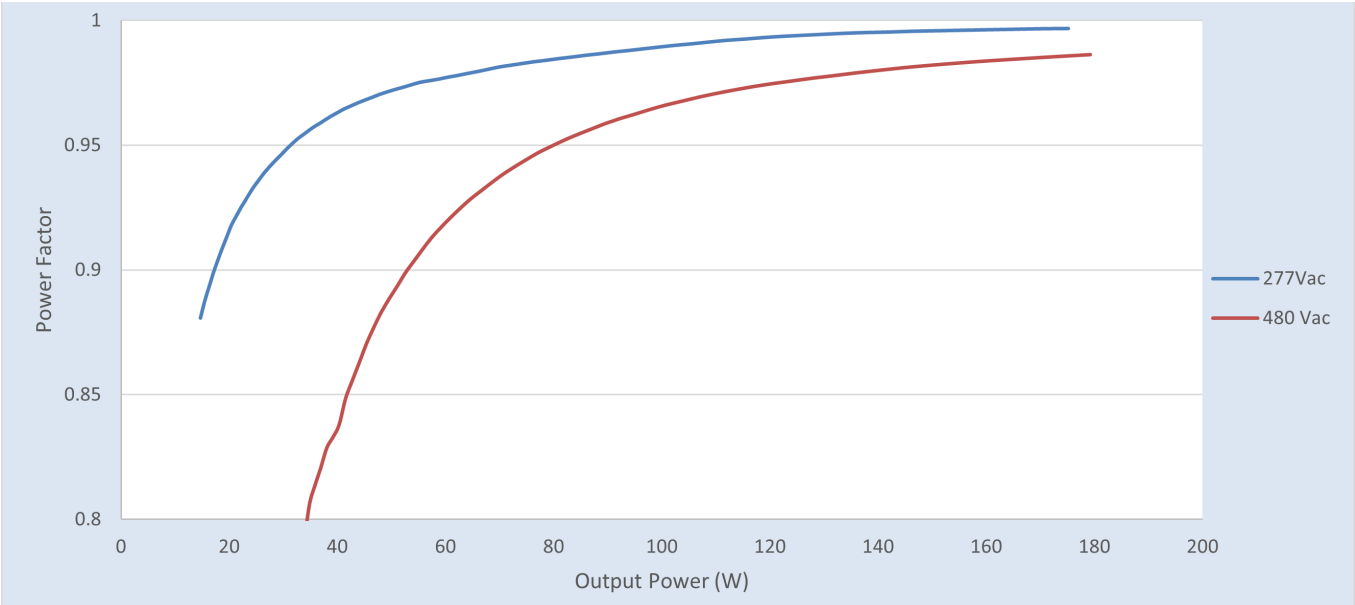

Total Harmonic Distortion Vs. Output Power

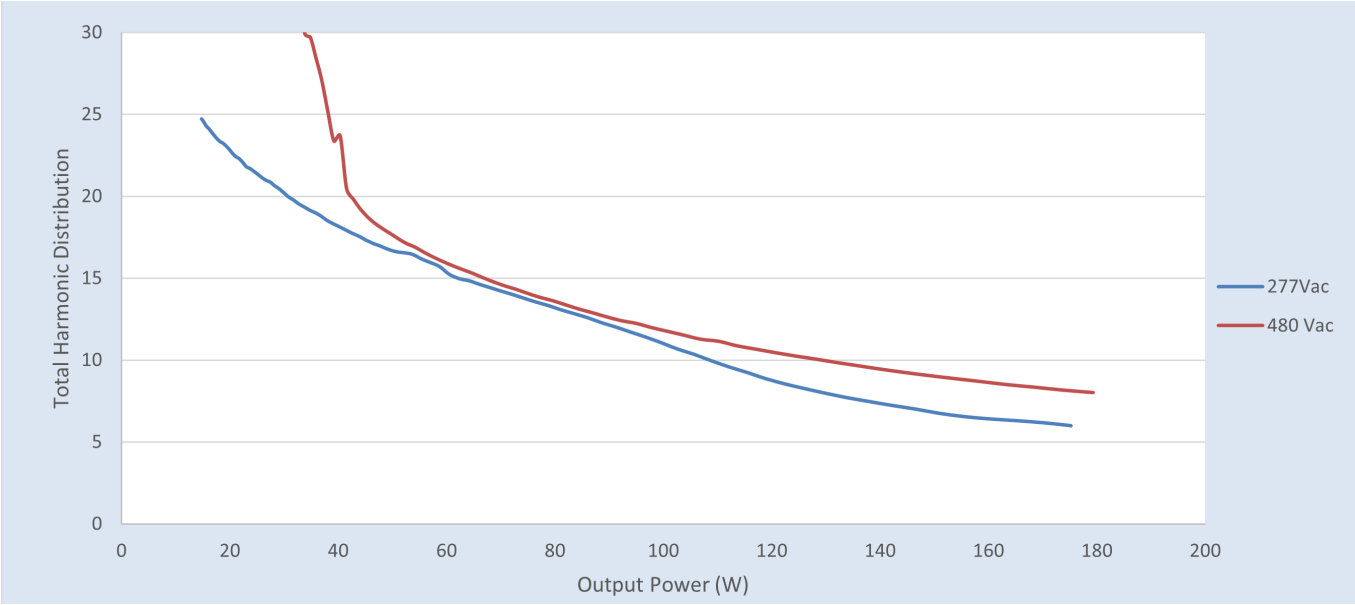

Downloaded from Arrow.com.

Xitanium SR XJ180C090V285VSF2

180W 277-480 0.9A SR with Auxiliary Supply

Inrush Current Info

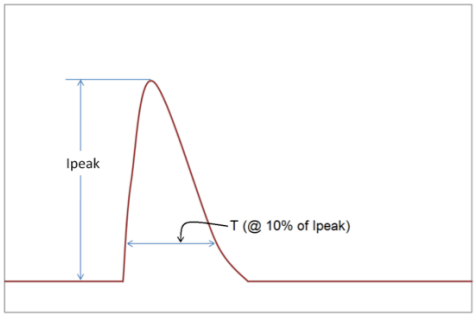

Vin	Ipeak	T (@ 10% of Ipeak)
277 Vac	52A	286µs
480 Vac	91A	289µs

Inrush current is measured at peak of the corresponding line voltage, source impedance per NEMA 410.

Lightning Surge Info

ANSI Surge Type	Differential Mode (L-N)	Common Mode (L-G, N-G, L&N-G)
Combination Wave (w/t 2_2)	6kV	6kV

Isolation

Isolation	Input Leads	Output Leads	0-10V	Enclosure
Input Leads	NA	2xU+1kV	2xU+1kV	2xU+1kV
Output Leads	2xU+1kV	NA	2xU+1kV	2xU+1kV
SR leads (DA+,DA-/ SGND,Aux and LSI), Class 2 Only	2xU+1kV	2xU+1kV	NA	500 V
Enclosure	2xU+1kV	2xU+1kV	500 V	NA

U = Max. working voltage

© 2022 Signify Holding. All rights reserved. The information provided herein is subject to change, without notice. Signify does not give any representation or warranty as to the accuracy or completeness of the information included herein and shall not be liable for any action in reliance thereon. The information presented in this document is not intended as any commercial offer and does not form part of any quotation or contract, unless otherwise agreed by Signify.

Signify North America Corporation
400 Crossing Blvd, Suite 600
Bridgewater, NJ 08807
Telephone: 855-486-2216

Signify Canada Ltd.
281 Hillmount Road,
Markham, ON, Canada L6C 2S3
Telephone: 800-668-9008

All trademarks are owned by Signify Holding or their respective owners.

Downloaded from Arrow.com.