Downloaded from Arrow.com.

used for: D-SUB COMBINATION

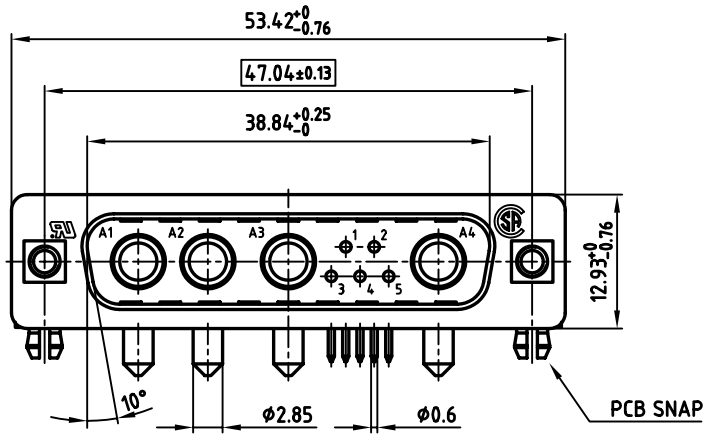

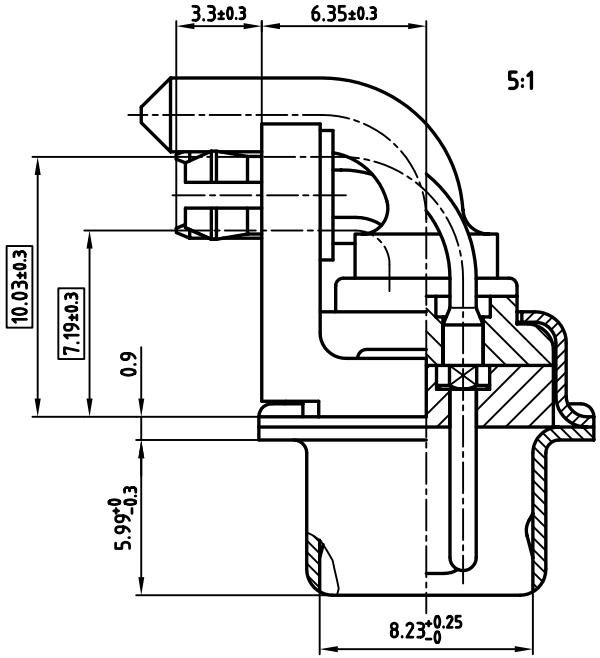

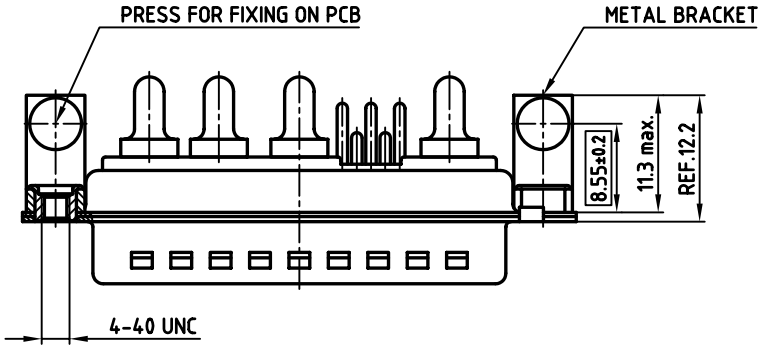

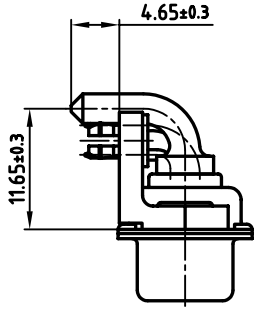

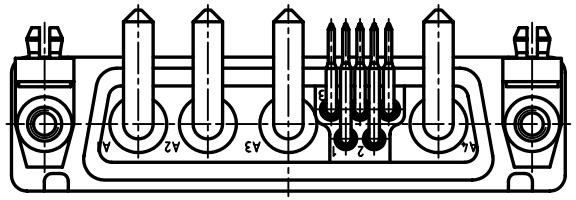

Directive 2002/95/EC „RoHS" Compliant

NOTES:

1. METALSHELLS: STEEL; min. 320µ" TIN
2. INSULATORS: PBT GF UL 94 V-0, GREEN
3. SIGNAL CONTACTS: COPPER ALLOY
4. PLATING: min. 30µ" HARD GOLD OVER min. 50µ" NICKEL
5. HIGH POWER CONTACTS 20A: COPPER ALLOY
6. PLATING: min. 30µ" HARD GOLD OVER min. 50µ" NICKEL
7. METAL BRACKET: STEEL; min. 320µ" TIN over 80µ" NICKEL
8. THREADED INSERT: COPPER ALLOY; min. 200µ" TIN over 80µ" NICKEL
9. PCB-SNAP: COPPER ALLOY; min. 200µ" TIN over 80µ" NICKEL
   PCB-HOLE: Ø3.1±0.1; PCB THICKNESS 1.6mm
10. P.C.B. HOLE DRILLINGS ON SHEET 2
11. MAXIMUM TORQUE VALUE FOR THREAD: 6" LBS
12. [ ] = CRITICAL DIMENSION: SPC

THIS DRAWING MAY NOT BE COPIED OR REPRODUCED IN ANY WAY, AND MAY NOT BE PASSED ON TO A THIRD PARTY WITHOUT WRITTEN PERMISSION. OWNERSHIP AND COPYRIGHT OF CONEC GmbH

DO NOT ALTER CAD DRAWING BY HAND

rev.	description	date	name

tolerance

2001	date	name
drawn	15.02.	Parei
appd.	15.02.	E. Mickenbecker
norm		
d-old		

CONEC®

scale: 2:1 (5:1)
material: SEE NOTES

title:
D-SUB COMBINATION MALE 90°
9W4P 0.318inch
with threaded insert, metal bracket and clip

dwg no: 13K1A186A
AutoCAD 2000 | DIN-A 3 | sh:1/2

part no: 3009W4PCT56N40X