ON Semiconductor

Is Now

DISCONTINUED
THIS DEVICE IS NOT RECOMMENDED FOR NEW DESIGN
PLEASE CONTACT YOUR onsemi
REPRESENTATIVE FOR INFORMATION

To learn more about onsemi™, please visit our website at
www.onsemi.com

onsemi and onsemi and other names, marks, and brands are registered and/or common law trademarks of Semiconductor Components Industries, LLC dba "**onsemi**" or its affiliates and/or subsidiaries in the United States and/or other countries. **onsemi** owns the rights to a number of patents, trademarks, copyrights, trade secrets, and other intellectual property. A listing of **onsemi** product/patent coverage may be accessed at www.onsemi.com/site/pdf/Patent-Marking.pdf. **onsemi** reserves the right to make changes at any time to any products or information herein, without notice. The information herein is provided "as-is" and **onsemi** makes no warranty, representation or guarantee regarding the accuracy of the information, product features, availability, functionality, or suitability of its products for any particular purpose, nor does **onsemi** assume any liability arising out of the application or use of any product or circuit, and specifically disclaims any and all liability, including without limitation special, consequential or incidental damages. Buyer is responsible for its products and applications using **onsemi** products, including compliance with all laws, regulations and safety requirements or standards, regardless of any support or applications information provided by **onsemi**. "Typical" parameters which may be provided in **onsemi** data sheets and/or specifications can and do vary in different applications and actual performance may vary over time. All operating parameters, including "Typicals" must be validated for each customer application by customer's technical experts. **onsemi** does not convey any license under any of its intellectual property rights nor the rights of others. **onsemi** products are not designed, intended, or authorized for use as a critical component in life support systems or any FDA Class 3 medical devices or medical devices with a same or similar classification in a foreign jurisdiction or any devices intended for implantation in the human body. Should Buyer purchase or use **onsemi** products for any such unintended or unauthorized application, Buyer shall indemnify and hold **onsemi** and its officers, employees, subsidiaries, affiliates, and distributors harmless against all claims, costs, damages, and expenses, and reasonable attorney fees arising out of, directly or indirectly, any claim of personal injury or death associated with such unintended or unauthorized use, even if such claim alleges that **onsemi** was negligent regarding the design or manufacture of the part. **onsemi** is an Equal Opportunity/Affirmative Action Employer. This literature is subject to all applicable copyright laws and is not for resale in any manner. Other names and brands may be claimed as the property of others.

Downloaded from Arrow.com.

ON Semiconductor®

HUF75645P3, HUF75645S3S

Data Sheet **October 2013**

N-Channel UltraFET Power MOSFET
100 V, 75 A, 14 mΩ

Packaging

JEDEC TO-220AB

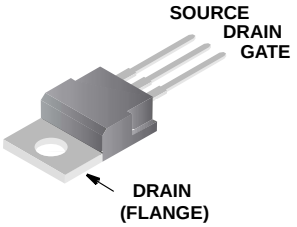

HUF75645P3

JEDEC TO-263AB

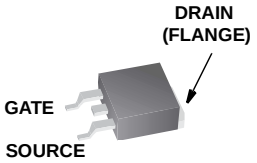

HUF75645S3ST

Symbol

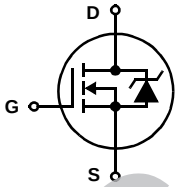

Features

- Ultra Low On-Resistance
  - $r_{DS(ON)}$ = 0.014Ω, V_{GS} = 10V
- Simulation Models
  - Temperature Compensated PSPICE® and SABER™ Electrical Models
  - Spice and Saber Thermal Impedance Models
  - www.onsemi.com
- Peak Current vs Pulse Width Curve
- UIS Rating Curve

Ordering Information

PART NUMBER	PACKAGE	BRAND
HUF75645P3	TO-220AB	75645P
HUF75645S3ST	TO-263AB	75645S

DISCONTINUED
THIS DEVICE IS NOT RECOMMENDED FOR NEW DESIGN
PLEASE CONTACT YOUR onsemi
REPRESENTATIVE FOR INFORMATION

Absolute Maximum Ratings T_C = 25°C, Unless Otherwise Specified

		HUF75645P3, HUF75645S3ST	UNITS
Drain to Source Voltage (Note 1)	V_{DSS}	100	V
Drain to Gate Voltage (R_{GS} = 20kΩ) (Note 1)	V_{DGR}	100	V
Gate to Source Voltage	V_{GS}	±20	V
Drain Current			
Continuous (T_C= 25°C, V_{GS} = 10V) (Figure 2)	I_D	75	A
Continuous (T_C= 100°C, V_{GS} = 10V) (Figure 2)	I_D	65	A
Pulsed Drain Current	I_{DM}	Figure 4	
Pulsed Avalanche Rating	UIS	Figures 6, 14, 15	
Power Dissipation	P_D	310	W
Derate Above 25°C		2.07	W/°C
Operating and Storage Temperature	T_J, T_{STG}	-55 to 175	°C
Maximum Temperature for Soldering			
Leads at 0.063in (1.6mm) from Case for 10s	T_L	300	°C
Package Body for 10s, See Techbrief TB334	T_{pkg}	260	°C

NOTES:

1. T_J = 25°C to 150°C.

CAUTION: *Stresses above those listed in "Absol24ute Maximum Ratings" may cause permanent damage to the device. This is a stress only rating and operation of the device at these or any other conditions above those indicated in the operational sections of this specification is not implied.*

©2001 Semiconductor Components Industries, LLC.

Downloaded from Arrow.com.

Electrical Specifications $T_C = 25^oC$, Unless Otherwise Specified

PARAMETER	SYMBOL	TEST CONDITIONS	MIN	TYP	MAX	UNITS
OFF STATE SPECIFICATIONS						
Drain to Source Breakdown Voltage	BV_{DSS}	I_D = 250µA, V_{GS} = 0V (Figure 11)	100	-	-	V
Zero Gate Voltage Drain Current	I_{DSS}	V_{DS} = 95V, V_{GS} = 0V	-	-	1	µA
		V_{DS} = 90V, V_{GS} = 0V, $T_C = 150^oC$	-	-	250	µA
Gate to Source Leakage Current	I_{GSS}	V_{GS} = ±20V	-	-	±100	nA
ON STATE SPECIFICATIONS						
Gate to Source Threshold Voltage	$V_{GS(TH)}$	$V_{GS} = V_{DS}$, I_D = 250µA (Figure 10)	2	-	4	V
Drain to Source On Resistance	$r_{DS(ON)}$	I_D = 75A, V_{GS} = 10V (Figure 9)	-	0.0115	0.014	Ω
THERMAL SPECIFICATIONS						
Thermal Resistance Junction to Case	$R_{\theta JC}$	TO-220 and TO-263	-	-	0.48	$^oC/W$
Thermal Resistance Junction to Ambient	$R_{\theta JA}$		-		62	$^oC/W$
SWITCHING SPECIFICATIONS (V_{GS} = 10V)						
Turn-On Time	t_{ON}	V_{DD} = 50V, I_D = 75A V_{GS} = 10V, R_{GS} = 2.5Ω (Figures 18, 19)	-	-	197	ns
Turn-On Delay Time	$t_{d(ON)}$		-	14	-	ns
Rise Time	t_r		-	117	-	ns
Turn-Off Delay Time	$t_{d(OFF)}$		-	41	-	ns
Fall Time	t_f		-	97	-	ns
Turn-Off Time	t_{OFF}		-	-	207	ns
GATE CHARGE SPECIFICATIONS						
Total Gate Charge	$Q_{g(TOT)}$	V_{GS} = 0V to 20V; V_{DD} = 50V, I_D = 75A, $I_{g(REF)}$ = 1.0mA (Figures 13, 16, 17)	-	198	238	nC
Gate Charge at 10V	$Q_{g(10)}$	V_{GS} = 0V to 10V	-	106	127	nC
Threshold Gate Charge	$Q_{g(TH)}$	V_{GS} = 0V to 2V	-	6.8	8.2	nC
Gate to Source Gate Charge	Q_{gs}		-	14	-	nC
Gate to Drain "Miller" Charge	Q_{gd}		-	41	-	nC
CAPACITANCE SPECIFICATIONS						
Input Capacitance	C_{ISS}	V_{DS} = 25V, V_{GS} = 0V, f = 1MHz (Figure 12)	-	3790	-	pF
Output Capacitance	C_{OSS}		-	810	-	pF
Reverse Transfer Capacitance	C_{RSS}		-	230	-	pF

Source to Drain Diode Specifications

PARAMETER	SYMBOL	TEST CONDITIONS	MIN	TYP	MAX	UNITS
Source to Drain Diode Voltage	V_{SD}	I_{SD} = 75A	-	-	1.25	V
		I_{SD} = 35A	-	-	1.00	V
Reverse Recovery Time	t_{rr}	I_{SD} = 75A, dI_{SD}/dt = 100A/µs	-	-	145	ns
Reverse Recovered Charge	Q_{RR}	I_{SD} = 75A, dI_{SD}/dt = 100A/µs	-	-	360	nC

DISCONTINUED
THIS DEVICE IS NOT RECOMMENDED FOR NEW DESIGN
PLEASE CONTACT YOUR onsemi
REPRESENTATIVE FOR INFORMATION

Downloaded from Arrow.com.

Typical Performance Curves

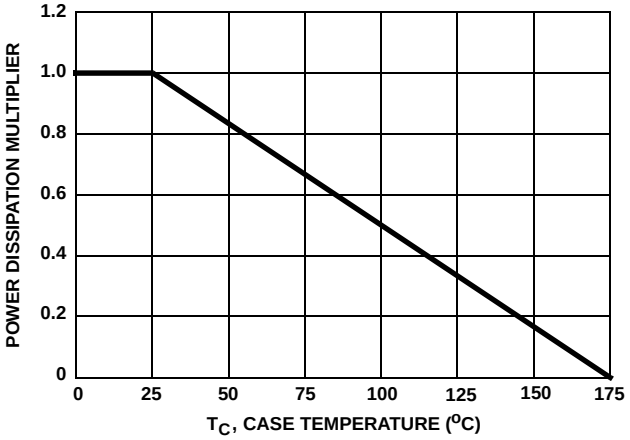

FIGURE 1. NORMALIZED POWER DISSIPATION vs CASE TEMPERATURE

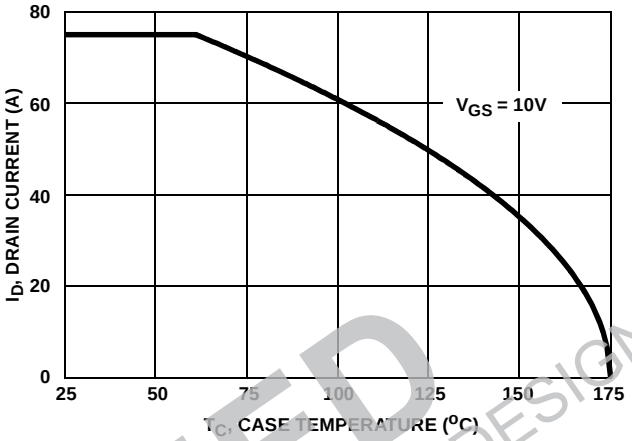

FIGURE 2. MAXIMUM CONTINUOUS DRAIN CURRENT vs CASE TEMPERATURE

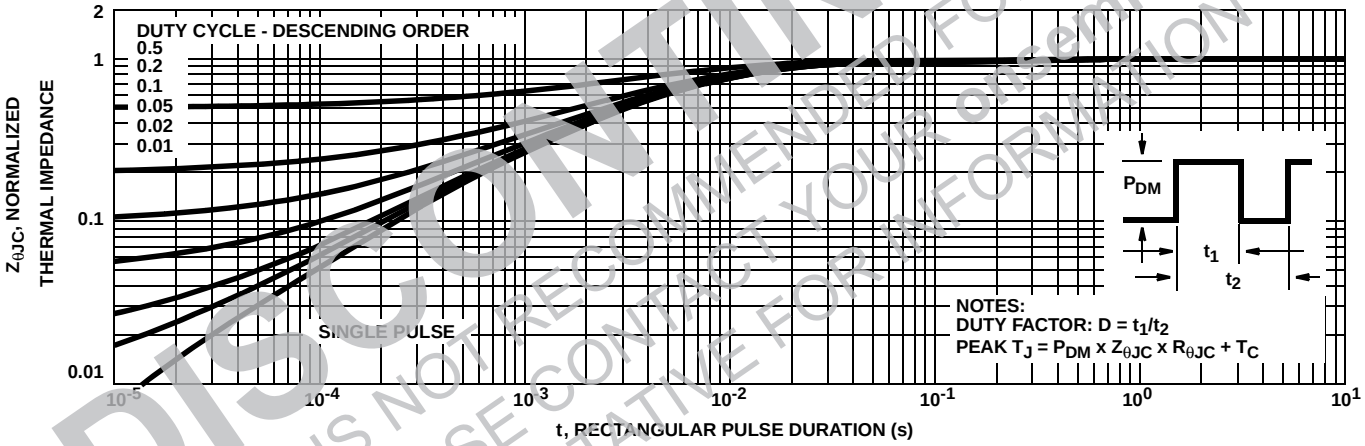

FIGURE 3. NORMALIZED MAXIMUM TRANSIENT THERMAL IMPEDANCE

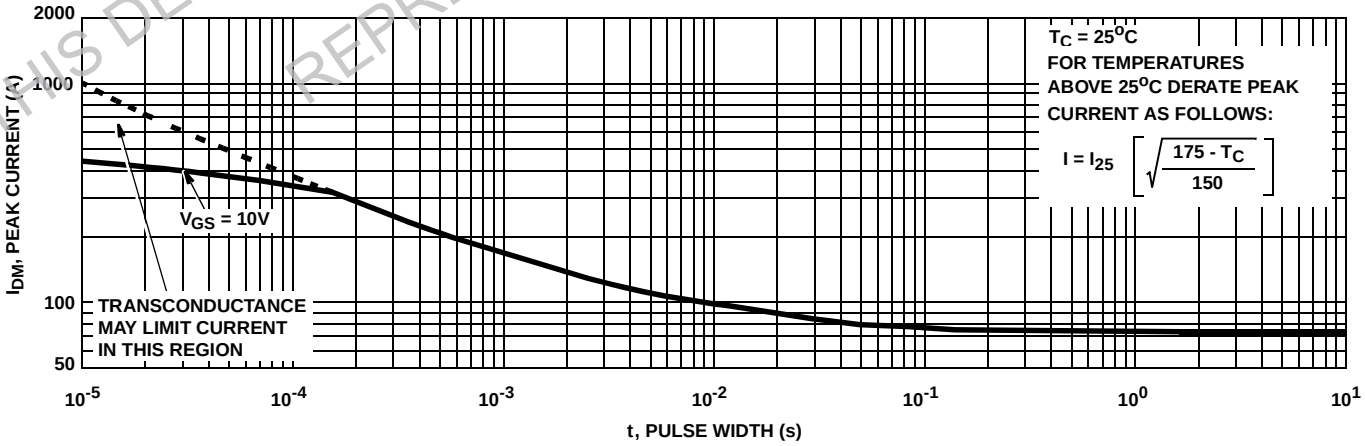

FIGURE 4. PEAK CURRENT CAPABILITY

DISCONTINUED
THIS DEVICE IS NOT RECOMMENDED FOR NEW DESIGN
PLEASE CONTACT YOUR onsemi
REPRESENTATIVE FOR INFORMATION

Downloaded from Arrow.com.

Typical Performance Curves (Continued)

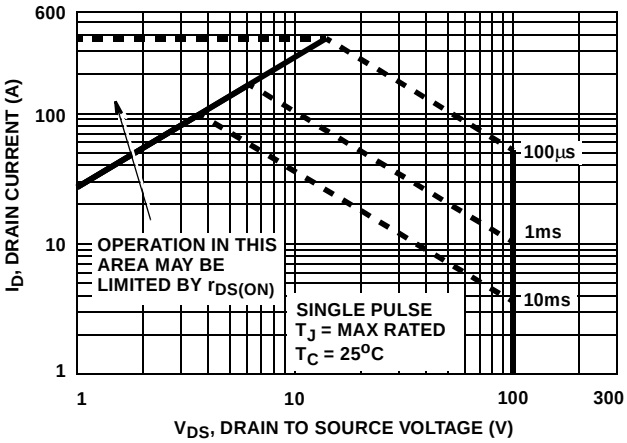

FIGURE 5. FORWARD BIAS SAFE OPERATING AREA

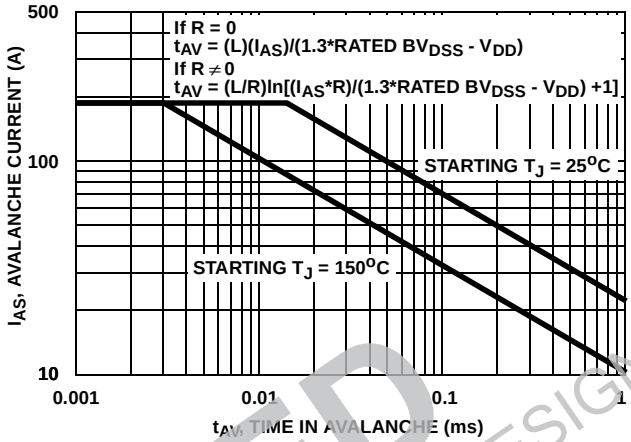

NOTE: Refer to ON Semiconductor Application Notes AN9321 and AN9322.

FIGURE 6. UNCLAMPED INDUCTIVE SWITCHING CAPABILITY

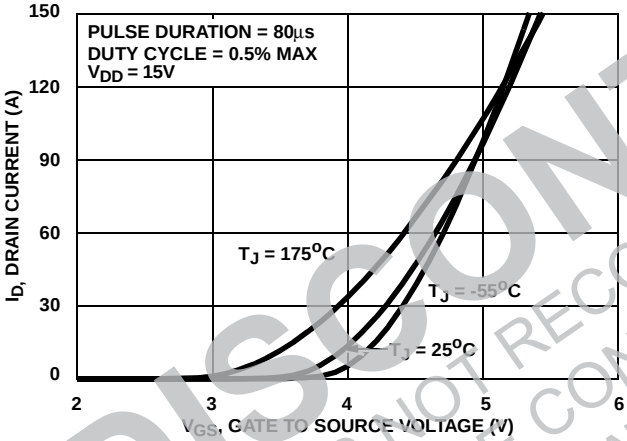

FIGURE 7. TRANSFER CHARACTERISTICS

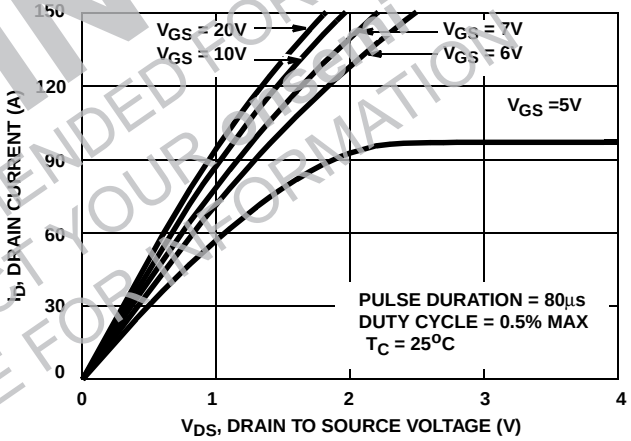

FIGURE 8. SATURATION CHARACTERISTICS

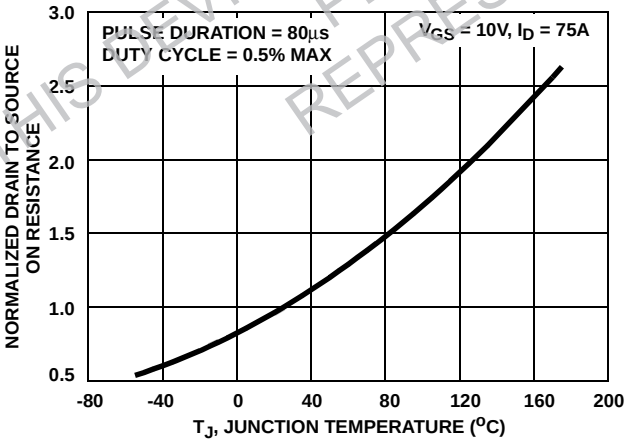

FIGURE 9. NORMALIZED DRAIN TO SOURCE ON RESISTANCE vs JUNCTION TEMPERATURE

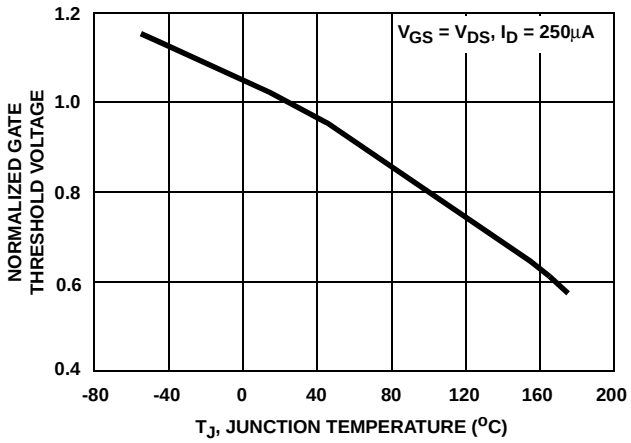

FIGURE 10. NORMALIZED GATE THRESHOLD VOLTAGE vs JUNCTION TEMPERATURE

DISCONTINUED
THIS DEVICE IS NOT RECOMMENDED FOR NEW DESIGN
PLEASE CONTACT YOUR onsemi
REPRESENTATIVE FOR INFORMATION

Downloaded from Arrow.com.

Typical Performance Curves (Continued)

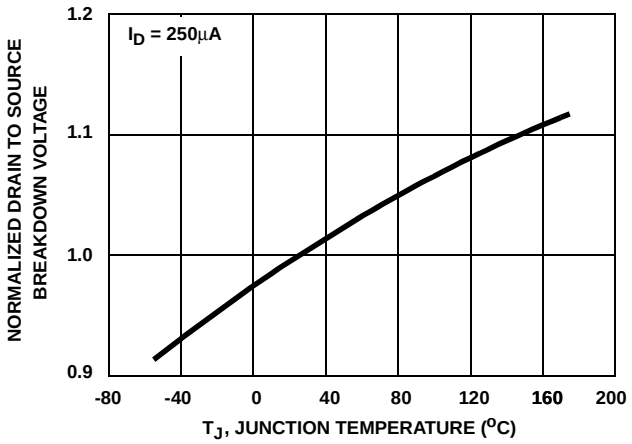

FIGURE 11. NORMALIZED DRAIN TO SOURCE BREAKDOWN VOLTAGE vs JUNCTION TEMPERATURE

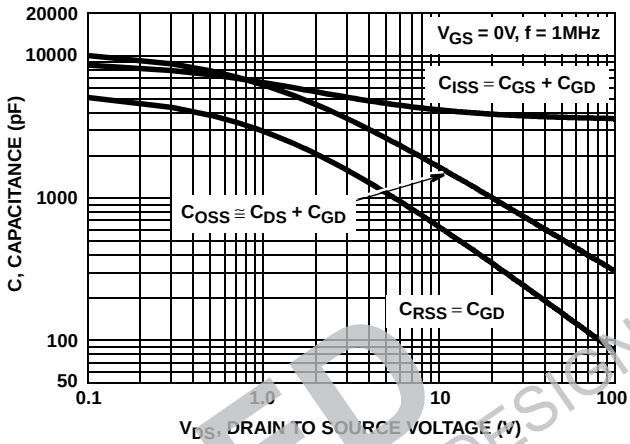

FIGURE 12. CAPACITANCE vs DRAIN TO SOURCE VOLTAGE

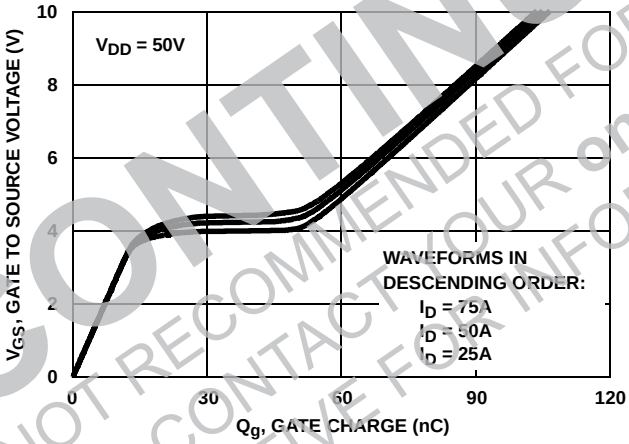

NOTE: Refer to ON Semiconductor Application Notes AN7254 and AN7260.

FIGURE 13. GATE CHARGE WAVEFORMS FOR CONSTANT GATE CURRENT

DISCONTINUED
THIS DEVICE IS NOT RECOMMENDED FOR NEW DESIGN
PLEASE CONTACT YOUR onsemi
REPRESENTATIVE FOR INFORMATION

Downloaded from Arrow.com.

Test Circuits and Waveforms

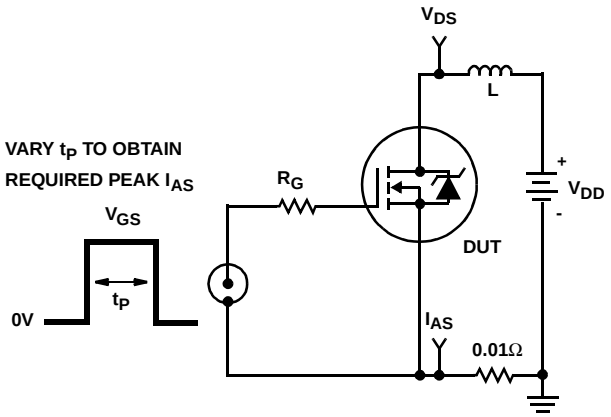

FIGURE 14. UNCLAMPED ENERGY TEST CIRCUIT

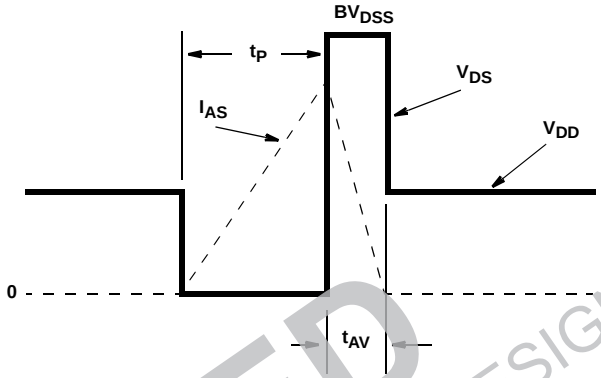

FIGURE 15. UNCLAMPED ENERGY WAVEFORMS

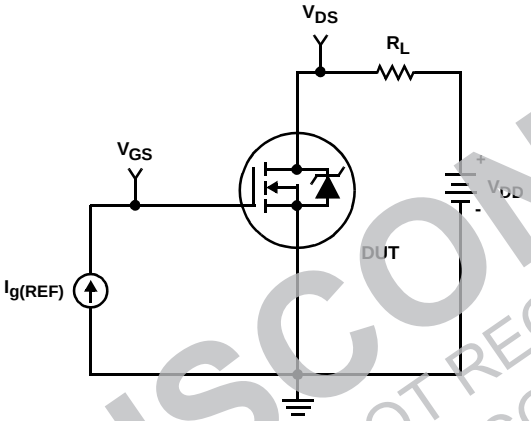

FIGURE 16. GATE CHARGE TEST CIRCUIT

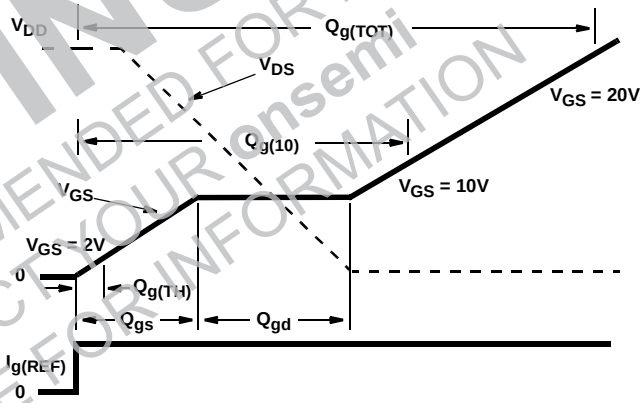

FIGURE 17. GATE CHARGE WAVEFORMS

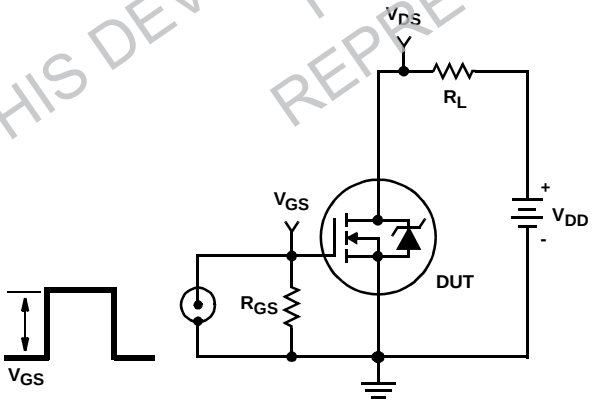

FIGURE 18. SWITCHING TIME TEST CIRCUIT

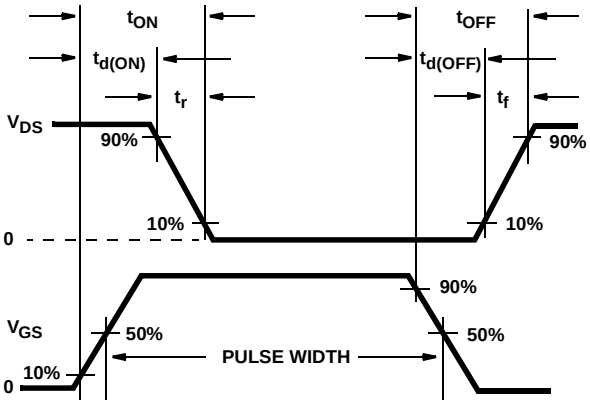

FIGURE 19. SWITCHING TIME WAVEFORM

DISCONTINUED
THIS DEVICE IS NOT RECOMMENDED FOR NEW DESIGN
PLEASE CONTACT YOUR onsemi
REPRESENTATIVE FOR INFORMATION

Downloaded from Arrow.com.

PSPICE Electrical Model

.SUBCKT HUF75645 2 1 3 ; rev 21 May 1999

CA 12 8 5.31e-9
CB 15 14 5.31e-9
CIN 6 8 3.56e-9

DBODY 7 5 DBODYMOD
DBREAK 5 11 DBREAKMOD
DPLCAP 10 5 DPLCAPMOD

EBREAK 11 7 17 18 115.5
EDS 14 8 5 8 1
EGS 13 8 6 8 1
ESG 6 10 6 8 1
EVTHRES 6 21 19 8 1
EVTEMP 20 6 18 22 1

IT 8 17 1

LDRAIN 2 5 1.0e-9
LGATE 1 9 5.1e-9
LSOURCE 3 7 4.4e-9

MMED 16 6 8 8 MMEDMOD
MSTRO 16 6 8 8 MSTROMOD
MWEAK 16 21 8 8 MWEAKMOD

RBREAK 17 18 RBREAKMOD 1
RDRAIN 50 16 RDRAINMOD 7.80e-3
RGATE 9 20 0.83
RLDRAIN 2 5 10
RLGATE 1 9 26
RLSOURCE 3 7 11
RSLC1 5 51 RSLCMOD 1e-6
RSLC2 5 50 1e3
RSOURCE 8 7 RSOURCEMOD 1.65e-3
RVTHRES 22 8 RVTHRESMOD 1
RVTEMP 18 19 RVTEMPMOD 1

S1A 6 12 13 8 S1AMOD
S1B 13 12 13 8 S1BMOD
S2A 6 15 14 13 S2AMOD
S2B 13 15 14 13 S2BMOD

VBAT 22 19 DC 1

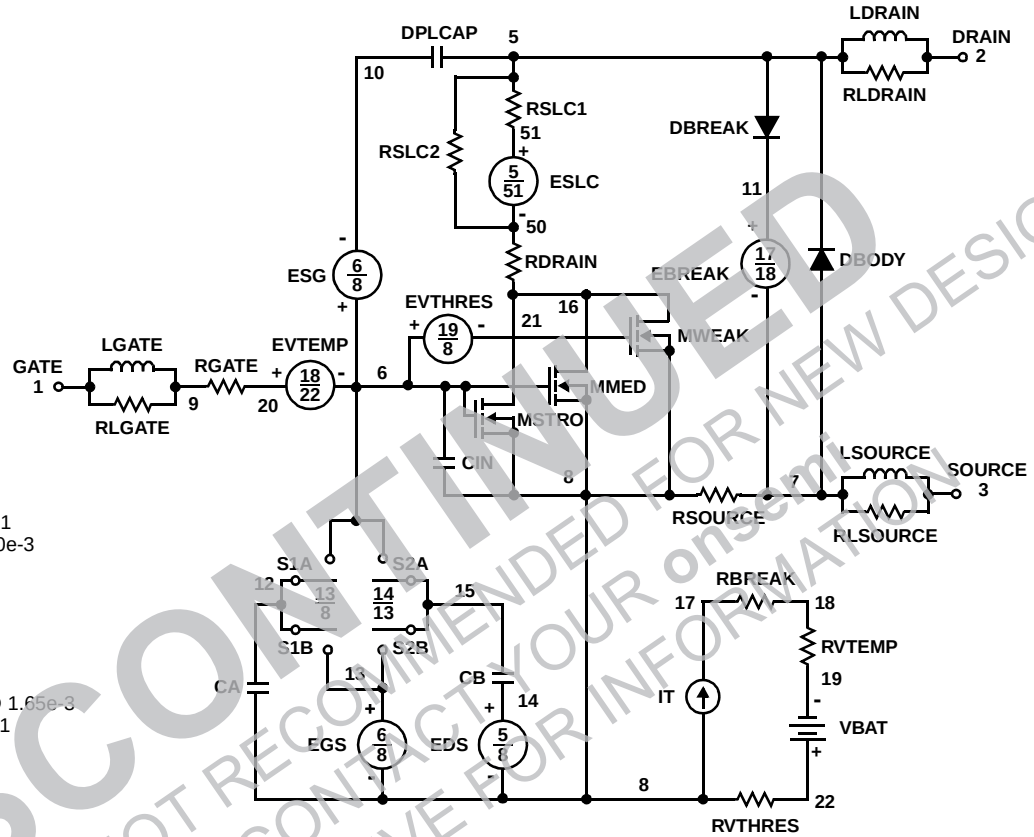

ESLC 51 50 VALUE={(V(5,51)/ABS(V(5,51)))*(PWR(V(5,51)/(1e-6*205),3.5))}

.MODEL DBODYMOD D (IS = 3.00e-12 IKF = 19 RS = 1.78e-3 XTI = 5 TRS1 = 2.25e-3 TRS2 = 1.00e-5 CJO = 5.32e-9 TT = 7.4e-8 M = 0.68)
.MODEL DBREAKMOD D (RS = 2.15e-1 IKF = 1 TRS1 = 8e-4 TRS2 = 3e-6)
.MODEL DPLCAPMOD D (CJO = 5.55e-9 IS = 1e-3 0M = 0.98)
.MODEL MMEDMOD NMOS (VTO = 3.13 KP = 10 IS = 1e-30 N = 10 TOX = 1 L = 1u W = 1u RG = 0.83)
.MODEL MSTROMOD NMOS (VTO = 3.51 KP = 93 IS = 1e-30 N = 10 TOX = 1 L = 1u W = 1u)
.MODEL MWEAKMOD NMOS (VTO = 2.65 KP = 0.11 IS = 1e-30 N = 10 TOX = 1 L = 1u W = 1u RG = 8.33)
.MODEL RBREAKMOD RES (TC1 = 9.9e-4 TC2 = -1.3e-6)
.MODEL RDRAINMOD RES (TC1 = 9.40e-3 TC2 = 2.93e-5)
.MODEL RSLCMOD RES (TC1 = 2.63e-3 TC2 = 1.05e-6)
.MODEL RSOURCEMOD RES (TC1 = 1e-3 TC2 = 1e-6)
.MODEL RVTHRESMOD RES (TC1 = -2.57e-3 TC2 = -7.05e-6)
.MODEL RVTEMPMOD RES (TC1 = -2.87e-3 TC2 = -2.21e-6)

.MODEL S1AMOD VSWITCH (RON = 1e-5 ROFF = 0.1 VON = -6.2 VOFF= -2.4)
.MODEL S1BMOD VSWITCH (RON = 1e-5 ROFF = 0.1 VON = -2.4 VOFF= -6.2)
.MODEL S2AMOD VSWITCH (RON = 1e-5 ROFF = 0.1 VON = -1.8 VOFF= 0.5)
.MODEL S2BMOD VSWITCH (RON = 1e-5 ROFF = 0.1 VON = 0.5 VOFF= -1.8)

.ENDS

NOTE: For further discussion of the PSPICE model, consult **A New PSPICE Sub-Circuit for the Power MOSFET Featuring Global Temperature Options**; IEEE Power Electronics Specialist Conference Records, 1991, written by William J. Hepp and C. Frank Wheatley.

DISCONTINUED
THIS DEVICE IS NOT RECOMMENDED FOR NEW DESIGN
PLEASE CONTACT YOUR onsemi
REPRESENTATIVE FOR INFORMATION

Downloaded from Arrow.com.

SABER Electrical Model

REV 21 May 1999

```
template ta75645 n2,n1,n3
electrical n2,n1,n3
{
var i iscl
d..model dbodymod = (is = 3.00e-12, cjo = 5.32e-9, tt = 7.4e-8, xti = 5, m = 0.68)
d..model dbreakmod = ()
d..model dplcapmod = (cjo = 5.55e-9, is = 1e-30, vj=1.0, m = 0.8)
m..model mmedmod = (type=_n, vto = 3.13, kp = 10, is = 1e-30, tox = 1)
m..model mstrongmod = (type=_n, vto = 3.51, kp = 93, is = 1e-30, tox = 1)
m..model mweakmod = (type=_n, vto = 2.65, kp = 0.11, is = 1e-30, tox = 1)
sw_vcsp..model s1amod = (ron = 1e-5, roff = 0.1, von = -6.2, voff = -2.4)
sw_vcsp..model s1bmod = (ron =1e-5, roff = 0.1, von = -2.4, voff = -6.2)
sw_vcsp..model s2amod = (ron = 1e-5, roff = 0.1, von = -1.8, voff = 0.5)
sw_vcsp..model s2bmod = (ron = 1e-5, roff = 0.1, von = 0.5, voff = -1.8)

c.ca n12 n8 = 5.31e-9
c.cb n15 n14 = 5.31e-9
c.cin n6 n8 = 3.56e-9

d.dbody n7 n71 = model=dbodymod
d.dbreak n72 n11 = model=dbreakmod
d.dplcap n10 n5 = model=dplcapmod

i.it n8 n17 = 1

l.ldrain n2 n5 = 1e-9
l.lgate n1 n9 = 5.1e-9
l.lsource n3 n7 = 4.4e-9

m.mmed n16 n6 n8 n8 = model=mmedmod, l=1u, w=1u
m.mstrong n16 n6 n8 n8 = model=mstrongmod, l=1u, w=1u
m.mweak n16 n21 n8 n8 = model=mweakmod, l=1u, w=1u

res.rbreak n17 n18 = 1, tc1 = 9.9e-4, tc2 = -1.3e-6
res.rdbody n71 n5 = 1.78e-3, tc1 = 2.25e-3, tc2 = 1.e-5
res.rdbreak n72 n5 = 2.15e-1, tc1 = 8e-4, tc2 = 3e-6
res.rdrain n50 n16 = 7.8e-3, tc1 = 9.4e-3, tc2 = 2.93e-5
res.rgate n9 n20 = 0.83
res.rldrain n2 n5 = 10
res.rlgate n1 n9 = 26
res.rlsource n3 n7 = 11
res.rslc1 n5 n51 = 1e-6, tc1 = 2.63e-3, tc2 = 1.05e-6
res.rslc2 n5 n50 = 1e3
res.rsource n8 n7 = 1.65e-3, tc1 = 1e-3, tc2 = 1e-6
res.rvtemp n18 n19 = 1, tc1 = -2.87e-3, tc2 = -2.21e-6
res.rvthres n22 n8 = 1, tc1 = -2.57e-3, tc2 = -7.05e-6

spe.ebreak n11 n7 n17 n18 = 115.5
spe.eds n14 n8 n5 n8 = 1
spe.egs n13 n8 n6 n8 = 1
spe.esg n6 n10 n6 n8 = 1
spe.evtemp n20 n6 n18 n22 = 1
spe.evthres n6 n21 n19 n8 = 1

sw_vcsp.s1a n6 n12 n13 n8 = model=s1amod
sw_vcsp.s1b n13 n12 n13 n8 = model=s1bmod
sw_vcsp.s2a n6 n15 n14 n13 = model=s2amod
sw_vcsp.s2b n13 n15 n14 n13 = model=s2bmod

v.vbat n22 n19 = dc=1

equations {
i (n51->n50) +=iscl
iscl: v(n51,n50) = ((v(n5,n51)/(1e-9+abs(v(n5,n51))))*((abs(v(n5,n51)*1e6/205))** 3.5))
}
}
```

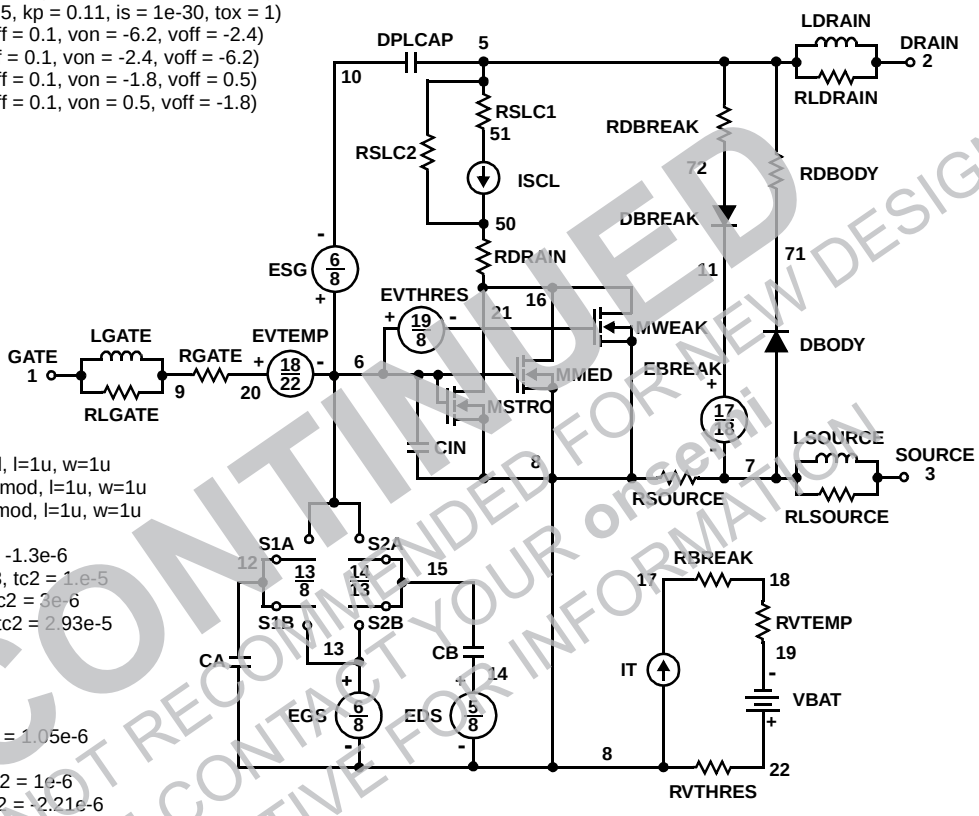

DISCONTINUED
THIS DEVICE IS NOT RECOMMENDED FOR NEW DESIGN
PLEASE CONTACT YOUR onsemi
REPRESENTATIVE FOR INFORMATION

Downloaded from Arrow.com.

SPICE Thermal Model

REV 28 July 1999

HUF75645T

CTHERM1 th 6 8.80e-3
CTHERM2 6 5 2.50e-2
CTHERM3 5 4 2.70e-2
CTHERM4 4 3 3.70e-2
CTHERM5 3 2 4.40e-2
CTHERM6 2 tl 3.40e-1

RTHERM1 th 6 1.20e-2
RTHERM2 6 5 3.00e-2
RTHERM3 5 4 4.30e-2
RTHERM4 4 3 8.80e-2
RTHERM5 3 2 9.90e-2
RTHERM6 2 tl 1.10e-1

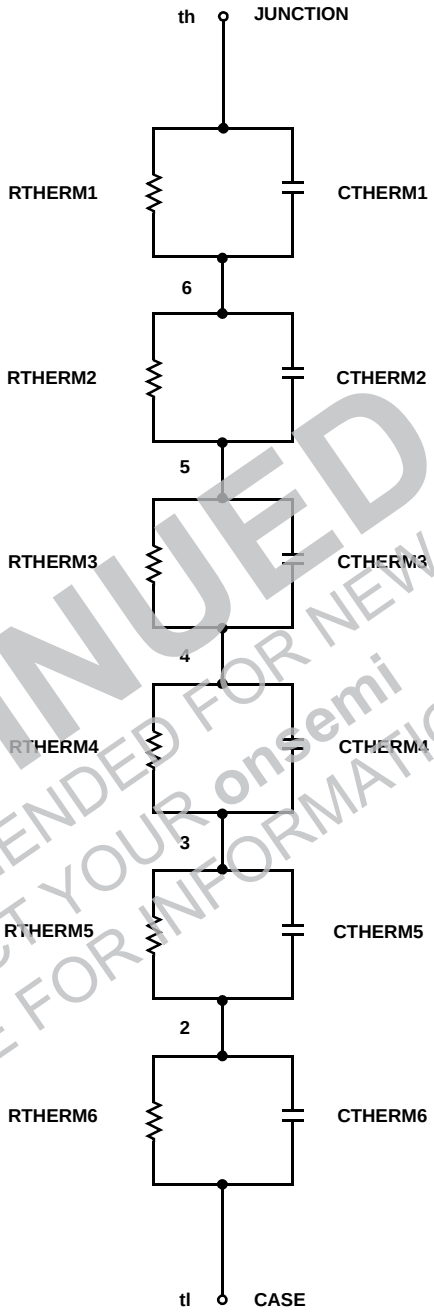

SABER Thermal Model

SABER thermal model HUF75645T

```
template thermal_model th tl
thermal_c th, tl
{
ctherm.ctherm1 th 6 = 8.80e-3
ctherm.ctherm2 6 5 = 2.50e-2
ctherm.ctherm3 5 4 = 2.70e-2
ctherm.ctherm4 4 3 = 3.70e-2
ctherm.ctherm5 3 2 = 4.40e-2
ctherm.ctherm6 2 tl = 3.40e-1

rtherm.rtherm1 th 6 = 1.20e-2
rtherm.rtherm2 6 5 = 3.00e-2
rtherm.rtherm3 5 4 = 4.30e-2
rtherm.rtherm4 4 3 = 8.80e-2
rtherm.rtherm5 3 2 = 9.90e-2
rtherm.rtherm6 2 tl = 1.10e-1
}
```

DISCONTINUED
THIS DEVICE IS NOT RECOMMENDED FOR NEW DESIGN
PLEASE CONTACT YOUR onsemi
REPRESENTATIVE FOR INFORMATION

Downloaded from Arrow.com.

DISCONTINUED
THIS DEVICE IS NOT RECOMMENDED FOR NEW DESIGN
PLEASE CONTACT YOUR onsemi
REPRESENTATIVE FOR INFORMATION

ON Semiconductor and ON are trademarks of Semiconductor Components Industries, LLC dba ON Semiconductor or its subsidiaries in the United States and/or other countries. ON Semiconductor owns the rights to a number of patents, trademarks, copyrights, trade secrets, and other intellectual property. A listing of ON Semiconductor's product/patent coverage may be accessed at www.onsemi.com/site/pdf/Patent−Marking.pdf. ON Semiconductor reserves the right to make changes without further notice to any products herein. ON Semiconductor makes no warranty, representation or guarantee regarding the suitability of its products for any particular purpose, nor does ON Semiconductor assume any liability arising out of the application or use of any product or circuit, and specifically disclaims any and all liability, including without limitation special, consequential or incidental damages. Buyer is responsible for its products and applications using ON Semiconductor products, including compliance with all laws, regulations and safety requirements or standards, regardless of any support or applications information provided by ON Semiconductor. "Typical" parameters which may be provided in ON Semiconductor data sheets and/or specifications can and do vary in different applications and actual performance may vary over time. All operating parameters, including "Typicals" must be validated for each customer application by customer's technical experts. ON Semiconductor does not convey any license under its patent rights nor the rights of others. ON Semiconductor products are not designed, intended, or authorized for use as a critical component in life support systems or any FDA Class 3 medical devices or medical devices with a same or similar classification in a foreign jurisdiction or any devices intended for implantation in the human body. Should Buyer purchase or use ON Semiconductor products for any such unintended or unauthorized application, Buyer shall indemnify and hold ON Semiconductor and its officers, employees, subsidiaries, affiliates, and distributors harmless against all claims, costs, damages, and expenses, and reasonable attorney fees arising out of, directly or indirectly, any claim of personal injury or death associated with such unintended or unauthorized use, even if such claim alleges that ON Semiconductor was negligent regarding the design or manufacture of the part. ON Semiconductor is an Equal Opportunity/Affirmative Action Employer. This literature is subject to all applicable copyright laws and is not for resale in any manner.

PUBLICATION ORDERING INFORMATION

LITERATURE FULFILLMENT:
Literature Distribution Center for ON Semiconductor
19521 E. 32nd Pkwy, Aurora, Colorado 80011 USA
Phone: 303−675−2175 or 800−344−3860 Toll Free USA/Canada
Fax: 303−675−2176 or 800−344−3867 Toll Free USA/Canada
Email: orderlit@onsemi.com

N. American Technical Support: 800−282−9855 Toll Free USA/Canada
Europe, Middle East and Africa Technical Support:
Phone: 421 33 790 2910
Japan Customer Focus Center
Phone: 81−3−5817−1050

ON Semiconductor Website: **www.onsemi.com**

Order Literature: http://www.onsemi.com/orderlit

For additional information, please contact your local Sales Representative

Downloaded from Arrow.com.