THIS DRAWING IS UNPUBLISHED. RELEASED FOR PUBLICATION 20
© COPYRIGHT 20 BY - ALL RIGHTS RESERVED.

LOC	DIST
GP	00

REVISIONS

P	LTR	DESCRIPTION	DATE	DWN	APVD
	A	REVISED PER ECR-14-002687	06MAR2014	NK	TM
	A1	REVISED PER ECR-24-225549	12JUL2025	NH	JH

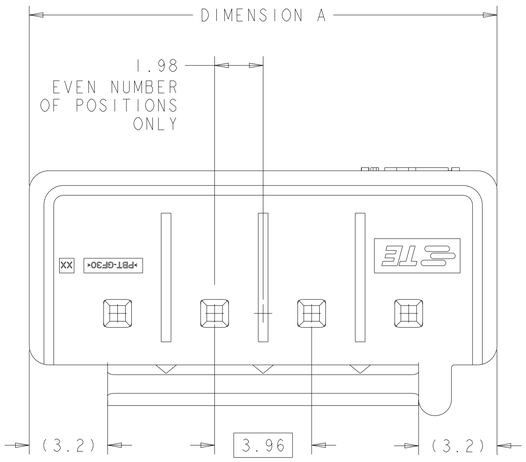

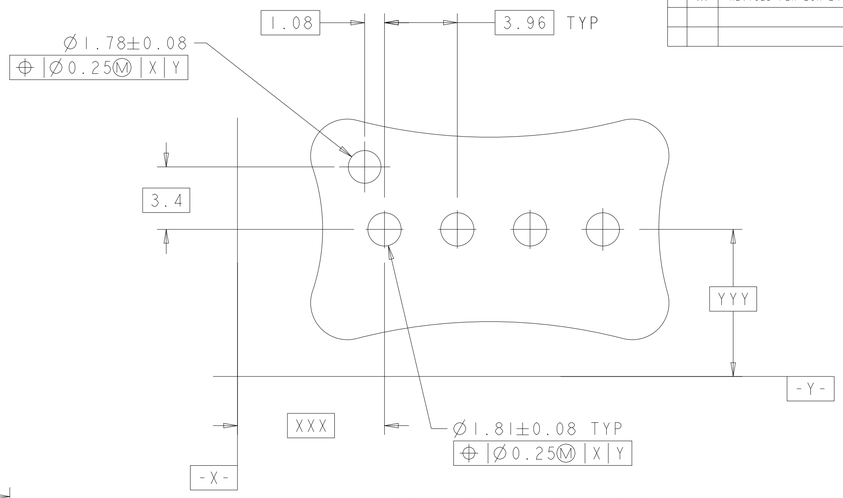

RECOMMENDED PCB LAYOUT
SCALE 6:1

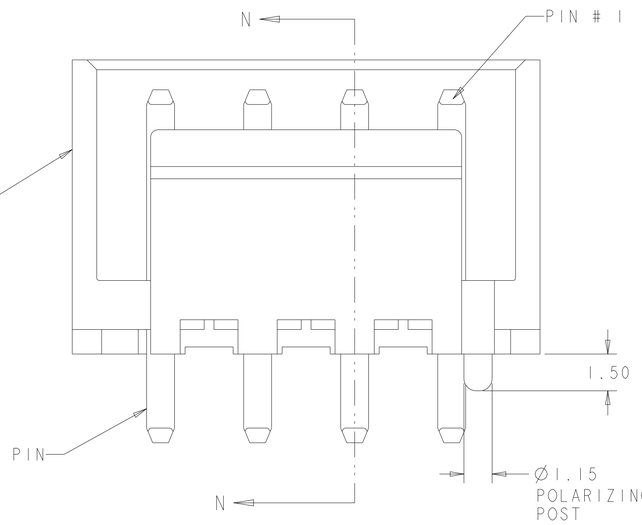

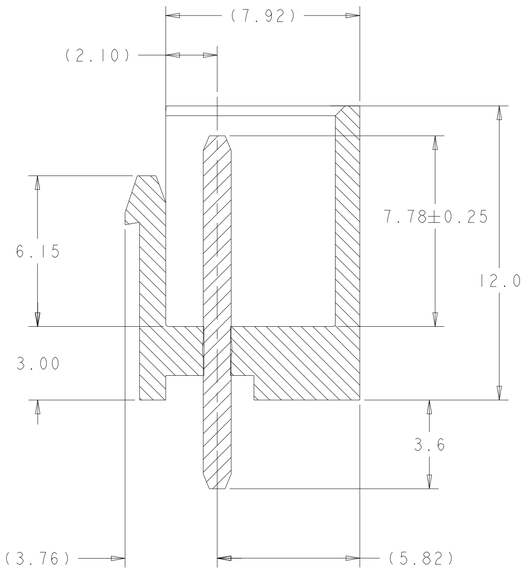

SECTION N-N

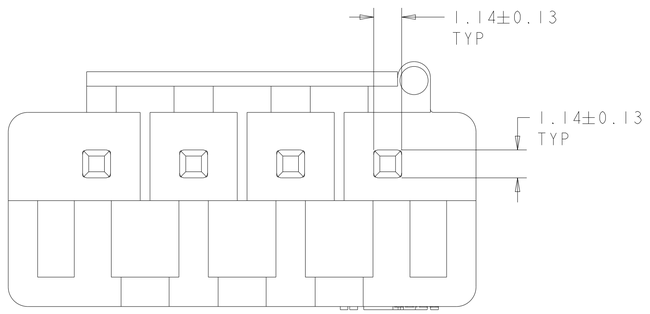

1. MATERIAL: HOUSING; PBT GLASS FILLED UL94V-0
PIN; BRASS, YELLOW
2. FINISH: PIN, 1.0µm MIN TIN OVER 0.8µm MIN NICKEL.

	DIM A	POS	ASSEMBLY PART NO.
	50.77	12	1-1744484-2
	46.81	11	1-1744484-1
	42.85	10	1-1744484-0
	38.89	9	1744484-9
OBSOLETE	~~34.93~~	~~8~~	~~1744484-8~~
OBSOLETE	~~30.97~~	~~7~~	~~1744484-7~~
OBSOLETE	~~27.01~~	~~6~~	~~1744484-6~~
OBSOLETE	~~23.05~~	~~5~~	~~1744484-5~~
	19.09	4	1744484-4
OBSOLETE	~~15.13~~	~~3~~	~~1744484-3~~
OBSOLETE	~~11.17~~	~~2~~	~~1744484-2~~

THIS DRAWING IS A CONTROLLED DOCUMENT.

DIMENSIONS: mm

TOLERANCES UNLESS OTHERWISE SPECIFIED:
0 PLC ±-
1 PLC ±0.50
2 PLC ±0.30
3 PLC ±-
4 PLC ±-
ANGLES ±-

MATERIAL 1
FINISH 2

DWN KIRAN HOLAL 11AUG2012
CHK MACE SAM 11AUG2012
APVD MACE SAM 11AUG2012
PRODUCT SPEC 108-5609
APPLICATION SPEC -
WEIGHT -

TE Connectivity

NAME SHROUDED HEADER ASSEMBLY, SINGLE LATCH, 3.96mm PITCH, ECONOMY POWER (EP), YELLOW

SIZE	CAGE CODE	DRAWING NO	RESTRICTED TO
A1	00779	C-1744484	-

Customer Drawing | SCALE 8:1 | SHEET 1 OF 1 | REV A1

4805 (3/11)

Downloaded from Arrow.com.