Data Sheet | Item Number: 890-1763

h-distribution connector; 3-pole; Cod. B; 1 input; 2 outputs; outputs on one side; 3 locking levers; for flying leads; pink

https://www.wago.com/890-1763

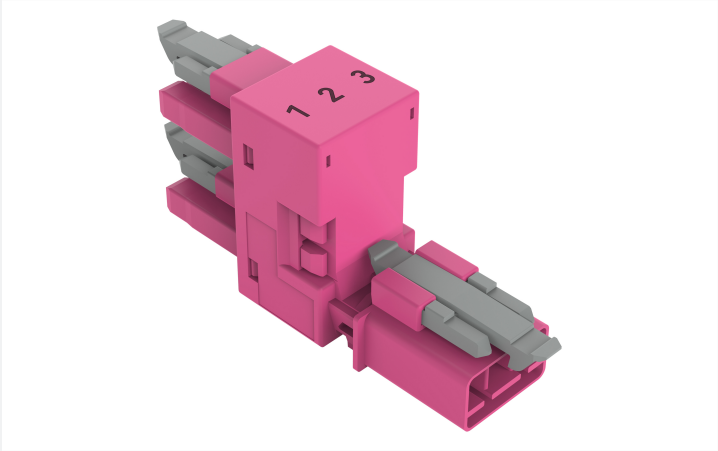

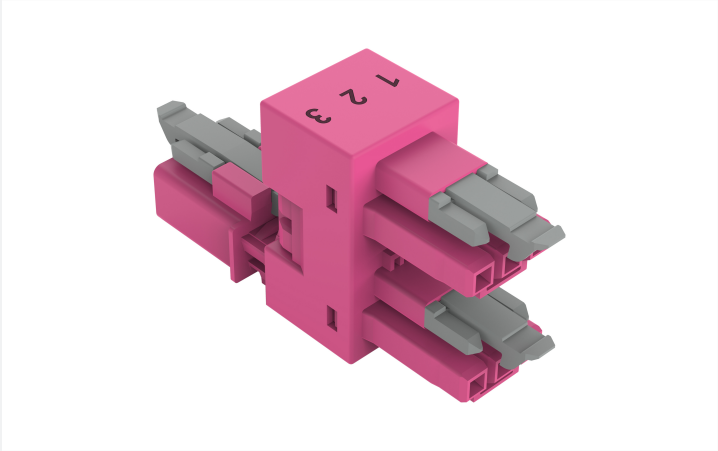

Color: pink

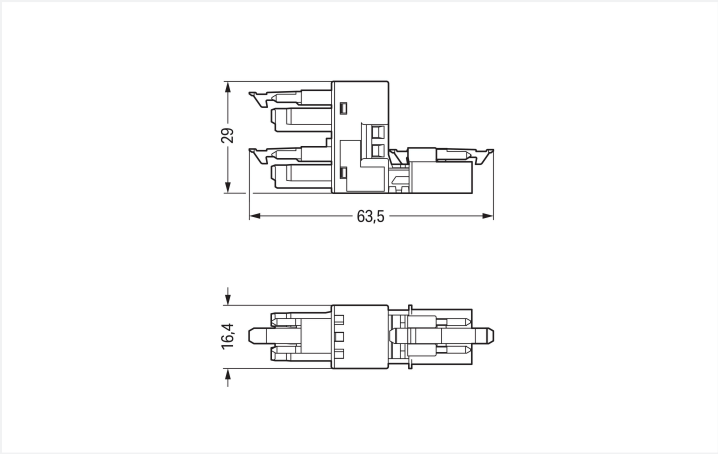

Dimensions in mm

Distribution connector *WINSTA*® MINI with protection against mismating

The *WINSTA*® MINI distribution connector rated current 16 A is the pluggable solution for your application in control cabinets, on PCBs or for lighting connections. Our pluggable installation connectors with spring pressure connection technology function without screw connections. They allow fast, efficient, error-free installation in numerous possible uses. The coding options reduce installation errors, allowing fast, secure wiring of all components. Solutions like the *WINSTA*® MINI pluggable installation connectors with B coding are appropriate for applications related to process control, for example, for lighting or in data networks. Thanks to its particularly minimal dimensions, our *WINSTA*® MINI Pluggable Connection System with Push-in CAGE CLAMP® spring pressure connection technology is very suitable in very tight spaces, i.e., for installations when very little room is available.

Push-in CAGE CLAMP® spring pressure connection technology – pluggable installation instead of laborious screw connections!

The WINSTA® Pluggable Connection System is perfectly tailored to the strict requirements of building installation. It makes electrical installation pluggable, and therefore more efficient, even more reliable, and error-free. Use of this pre-assembled system decreases assembly times and errors during installation at the construction site. Choose durability and quality – with marking from WAGO makes the electrical installation of electrical components noticeably easier.

- protection against mismating eliminates errors
- consistent IP40 protection
- with B coding for controllers such as lighting fixtures and sun blinds
- ready for immediate use
- convenient installation and commissioning

Downloaded from Arrow.com.

Notes

General safety information	1. Only to be used by a qualified electrician or by a person electrically instructed for the task (EIP per DIN VDE 0105-100). 2. Do not install while energized or under load. 3. Use only for its intended purpose. 4. Observe applicable national regulations, standards and directives. 5. Observe the technical specifications of the products. 6. Ensure correct polarity assignment. 7. Do not use damaged or contaminated components. 8. Observe conductor types, conductor cross-sections, strip lengths and cable diameters. 9. Insert conductors up to the stop. 10. Use only with locking lever and strain relief. 11. Use original accessories only. **To be sold only with installation instructions!**
Variants:	Other pole markings Other versions (or variants) can be requested from WAGO Sales or configured at https://configurator.wago.com/.

Electrical data

Ratings per	IEC/EN 60664-1		
Overvoltage category	III	III	II
Pollution degree	3	2	2
Nominal voltage	250 V	-	-
Rated impulse withstand voltage	4 kV	-	-
Rated current	16 A	-	-

Ratings per IEC/EN – Notes	
Rated current (note)	13 A for 3-pole load

Approvals per	UL 1977
Rated voltage	600 V
Rated current	14 A

General information	
Note on contact resistance	approx. 1 mΩ of contact resistance approx. 0.25 mΩ contact transition plug/socket

Connection Data

Total number of potentials	3

Connection 1	
Pole number	3
Coding	B

Physical data

Pin spacing	4.4 mm / 0.173 inches
Width	16.4 mm / 0.646 inches
Height	29 mm / 1.142 inches
Depth	63.5 mm / 2.5 inches

Mechanical data

Use	Control technology
Variable coding	No
Marking	1 2 3
Potential marking	1 2 3
Mating force of a plug-in connection	Approx. 20 … 70 N (depending on pole number)
Retention force of a plug-in connection	When locked: > 80 N
Unmating force of a plug-in connection	Unlocked: approx. 20 … 70 N (depending on pole number)
Number of mating cycles	200, without resistive load
Type of distribution box	h-distribution connector, outputs at one end
Protection type	IP20; IP40 when mated
Suitable	for flying leads

Downloaded from Arrow.com.

Plug-in connection

Mismating protection	Yes
Note on mismating protection	All *WINSTA*® components are 100% protected against mismating when: a.) plugging different numbers of poles b.) plugging while rotated 180 c.) plugging while laterally staggered d.) plugging one pole
Locking lever	Yes
Locking of plug-in connection	Locking lever
Note on locking system	All connectors for mounted installations (snap-in versions for lighting fixtures or devices, all types of PCB and distribution connectors) are factory-equipped with locking levers to ensure plugs and sockets are securely locked. Additional locking levers are only required for flying leads (plug/socket).
Number of locking levers	3

Material data

Note (material data)	Information on material specifications can be found here
Color	pink
Material group	I
Insulation material (main housing)	Polyamide (PA66)
Flammability class per UL94	V0
Contact material	Copper or copper alloy; surface-treated
Contact Plating	Tin
Fire load	0.217 MJ
Weight	13.9 g

Environmental requirements

Processing temperature	-5 … +40 °C
Continuous operating temperature	-35 … +85 °C
Note on continuous operating temperature	Insulating parts for temperatures ≤ 105 °C

Commercial data

Product Group	20 (Winsta)
PU (SPU)	50 pcs
Packaging type	Box
Country of origin	DE
GTIN	4050821530756
Customs tariff number	85366990990

Product Classification

UNSPSC	39121421
eCl@ss 10.0	27-44-06-03
eCl@ss 9.0	27-44-06-03
ETIM 9.0	EC002567
ETIM 10.0	EC002567
ECCN	NO US CLASSIFICATION

Downloaded from Arrow.com.

Environmental Product Compliance

RoHS Compliance Status	Compliant,No Exemption

Approvals / Certificates

General approvals

Approval	Standard	Certificate Name
CB DEKRA Certification B.V.	IEC 61984	NL-64351
CB DEKRA Certification B.V.	EN 61984	71-112993
cURus Underwriters Laboratories Inc.	UL 1977	E45171
KEMA/KEUR DEKRA Certification B.V.	EN 60320	2148952.04

Declarations of conformity and manufacturer's declarations

Approval	Standard	Certificate Name
EU-Declaration of Conformity WAGO GmbH & Co. KG	-	-
UK-Declaration of Conformity WAGO GmbH & Co. KG	-	-

Approvals for marine applications

Approval	Standard	Certificate Name
DNV GL Det Norske Veritas, Germanischer Lloyd	-	TAE00001Z6
PRS Polski Rejestr Statków	-	TE/1096/880590/23

Downloads

Environmental Product Compliance

Compliance Search

Environmental Product Compliance 890-1763

Documentation

Bid Text

890-1763	19.02.2019	xml 2.89 KB
890-1763	02.12.2014	doc 22.50 KB

Downloaded from Arrow.com.

CAD/CAE-Data

CAD data	CAE data
2D/3D Models 890-1763	WSCAD Universe 890-1763
	ZUKEN Portal 890-1763

1 Compatible Products

1.1 System counterpart

1.1.1 Cable assembly



Item No.: 891-8993/205-107
pre-assembled connecting cable; Eca; Plug/open-ended; 3-pole; Cod. B; 1 m; 1,00 mm²; pink



Item No.: 891-8993/105-107
pre-assembled connecting cable; Eca; Socket/open-ended; 3-pole; Cod. B; 1 m; 1,00 mm²; pink



Item No.: 891-8993/005-107
pre-assembled interconnecting cable; Socket/plug; 3-pole; Cod. B; 1 m; 1,00 mm²; pink

1.1.2 Female connector/socket



Item No.: 890-283
Socket; 3-pole; Cod. B; 1,50 mm²; pink

1.1.3 Male connector/plug



Item No.: 890-293
Plug; 3-pole; Cod. B; 1,50 mm²; pink

1.2 Required Accessories

1.2.1 Installation

1.2.1.1 Mounting accessories



Item No.: 890-623
Mounting plate; 3-pole; for distribution connectors; Plastic; black



Item No.: 890-673
Mounting plate; 3-pole; for distribution connectors; Plastic; white

Downloaded from Arrow.com.

Installation Notes

Installation



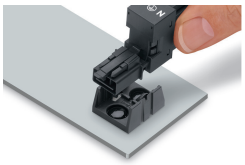

Secure the mounting plate via pins.

Downloaded from Arrow.com.