MICRO SWITCH
A DIVISION OF MINNEAPOLIS-HONEYWELL REGULATOR COMPANY
FREEPORT, ILLINOIS
FED. MFR. CODE 91929

SWITCH — BASIC

CATALOG LISTING
BZ – 7YQIT1

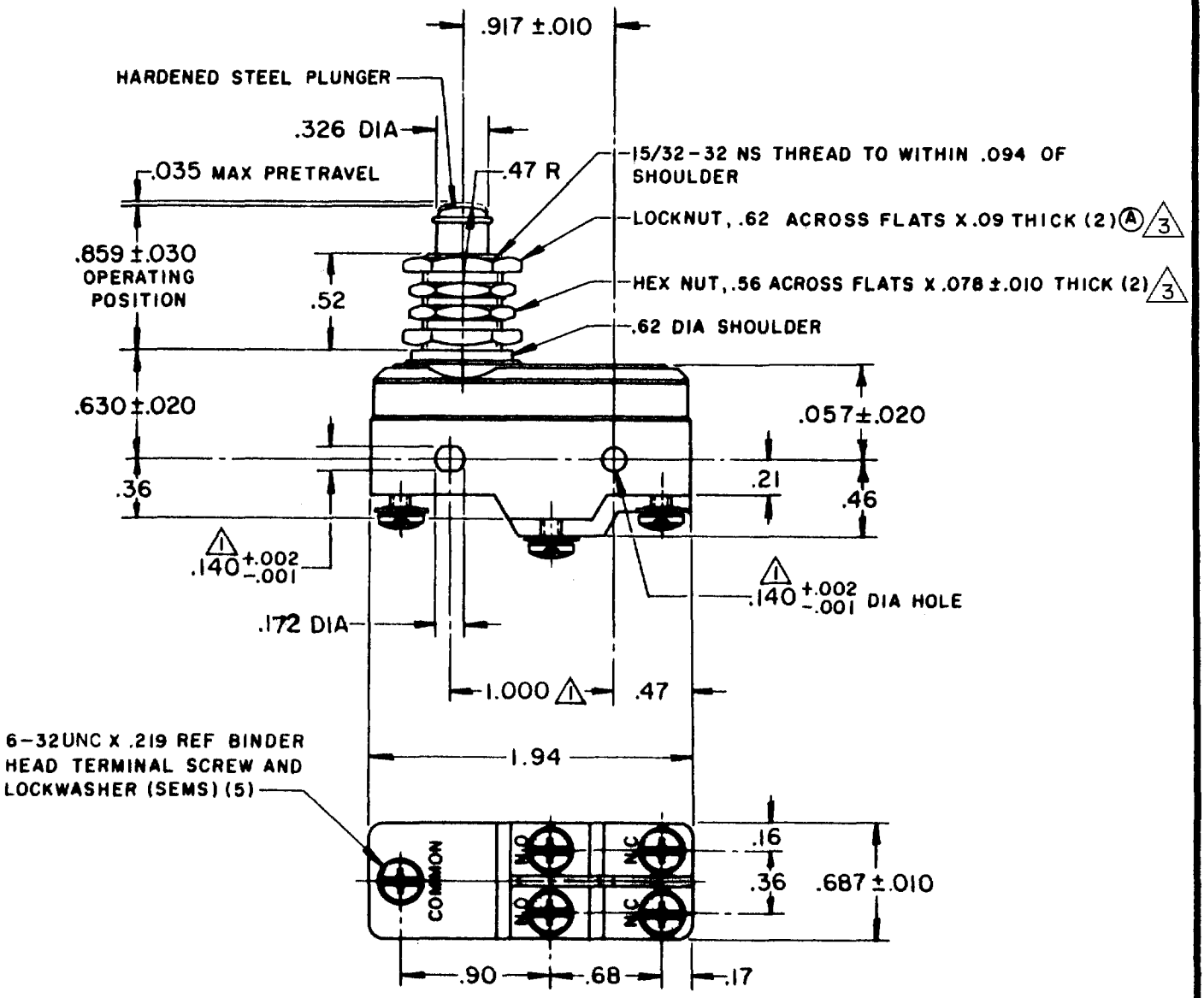

NOTE–
1 – MOUNTING HOLES WILL ACCEPT PINS OR SCREWS OF .139 MAX DIA ON 1.000 ±.002 CENTERS
2 – SWITCH WILL PERFORM SATISFACTORILY IN TEMPERATURES TO MINUS 65° F
3 HARDWARE FURNISHED UNASSEMBLED

THIS DRAWING COVERS A PROPRIETARY ITEM AND IS THE PROPERTY OF MICRO SWITCH, A DIVISION OF MINNEAPOLIS-HONEYWELL REGULATOR CO. THIS DRAWING IS NOT TO BE COPIED OR USED WITHOUT THE APPROVAL OF MICRO SWITCH.

CHARACTERISTICS

OPERATING FORCE————————30 OZ MAX

RELEASE FORCE——————————4 OZ MIN

DIFFERENTIAL TRAVEL————————.002–.007

OVERTRAVEL——————————————.219 MIN

ELECTRICAL DATA

CONTACT ARRANGEMENT
SINGLE POLE DOUBLE THROW
SPLIT CONTACT

UNDERWRITERS' LAB. INC. LISTED RATING
-L4- 5 A-250 VAC

SCALE FULL

DO NOT SCALE PRINT

UNLESS OTHERWISE SPECIFIED
DIMENSIONS ARE IN INCHES
TOLERANCES ARE:

ONE PLACE	(.0)	±.030
TWO PLACE	(.00)	±.015
THREE PLACE	(.000)	±.005
ANGLES		±

WEIGHT .080 LB

(M) BZ-7YQIT1 ISSUE 7
REPLACES
RELEASE NO.
BZ-7YQIT1
M
DRAWING NUMBER
ISSUE 12
CHECK

REVISIONS

A	CO 14866	JID 10 AUG 60
B	CO34304	RER 4 APR 75
C	CO-69351-D	JWB 18 JUL 91
D	CO 77590	SAD 11 JUN 94
E	CO-82133	CSL 24 JUL 96

CHECK
CHECK
CHECK
DRAWN JID 10 AUG 60

FORMTEK
FO-50378

Downloaded from Arrow.com.