used for: D-SUB HD

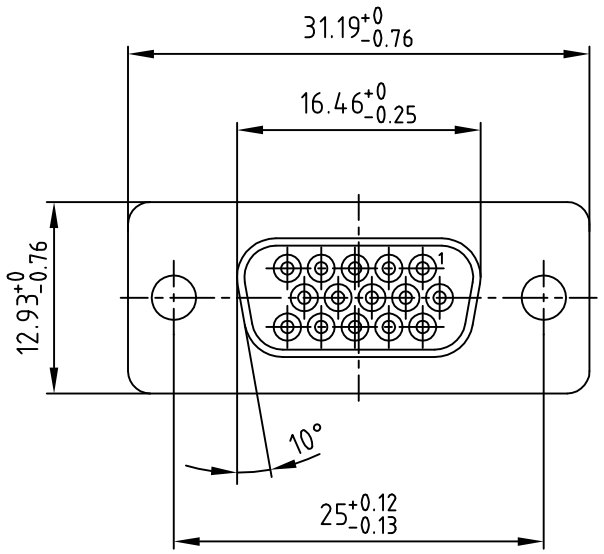

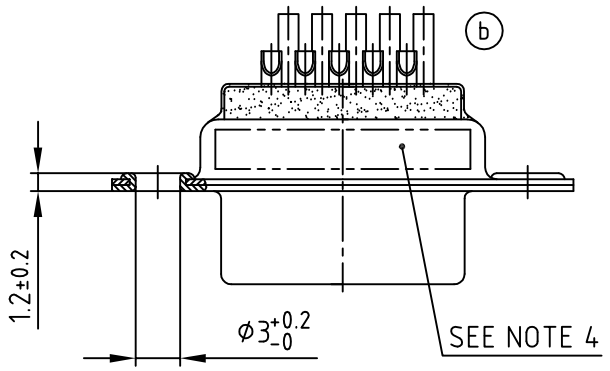

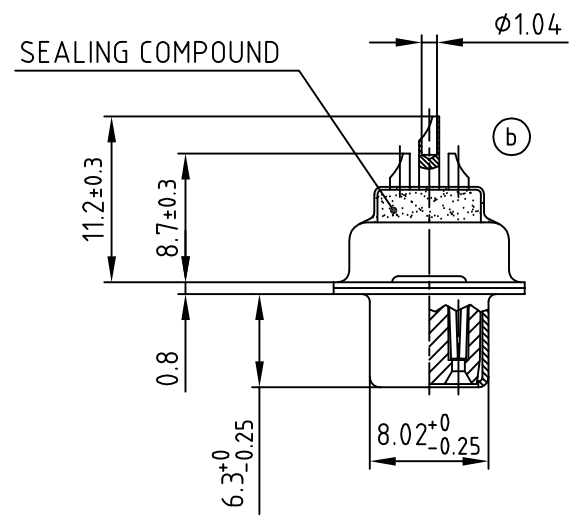

NOTES:

1. METALSHELLS: COPPER ALLOY; min. 320µin TIN
2. INSULATORS: PBT GF UL 94 V-0, BLACK
3. CONTACTS: COPPER ALLOY
   PLATING: GOLD FLASH over NICKEL
   SOLDER CUP ACCEPTS CABLE AWG 22
4. CONNECTOR IS PART MARKED: 4HDD15SAM99A10X CONEC ABC

Directive 2002/95/EC RoHS compliant

APPROVAL # FREIGABE # DEBLOCAGE # AUTOR/ZACION # APPROVAL

CUSTOMER APPROVAL DATE:

NAME: TITLE:

COMPANY NAME:

THIS DRAWING MAY NOT BE COPIED OR REPRODUCED IN ANY WAY, AND MAY NOT BE PASSED ON TO A THIRD PARTY WITHOUT WRITTEN PERMISSION. OWNERSHIP AND COPYRIGHT OF CONEC GmbH

DO NOT ALTER CAD DRAWING BY HAND

rev.	description	date	name
2 x b	Ä3900	16.02.2011	Gitinow
a	Origin		

tolerance — dim. in mm

	date	name
2002		
drawn	28.10.	Parei
appd.	28.10.	Kühle
norm		
d-old		

scale: 2:1

material: SEE NOTES

title: D-SUB HD FEMALE
15pos. Solder cup

dwg no: 18K2A039A

AutoCAD 2000 | DIN-A 3 | sh: 1/1

part no: 4HDD15SAM99A10X

Downloaded from Arrow.com.